How To Specify a 3M™ Static Shielding or Moisture Barrier Bag



To specify a bag, you need to choose:

- **Bag Type**
- **Bag Size**
- **Markings**
- **Bag Features**

Call your Distributor or 3M Customer Care Representative for Assistance with Specifying a Bag, or for Stock Levels and Lead Times.

BAG TYPE

Bag types are based on the intended function of the bag and the material the bag is made from. Choose the bag for your application:

Bag	Name
Static Shielding Bag, Metal-in	3M 1000
Static Shielding Bag, Metal-in ZipTop	3M 1000 ZipTop
Static Shielding Bag, Metal-out	3M 1500
Static Shielding Bag, Metal-out ZipTop	3M 1500 ZipTop
Moisture Barrier Bag, Aluminized, 3.6 mil	Dri-Shield 2000
Moisture Barrier Bag, Aluminized, 3.6 mil, Metal-out	Dri-Shield 2500
Moisture Barrier Bag, Aluminized, 7.0 mil	Dri-Shield 2700
Moisture Barrier Bag, Foil, 6 mil	Dri-Shield 3000
Moisture Barrier Bag, Foil, 4 mil	Dri-Shield 3400

BAG SIZE

Determining Size:

- Calculate the approximate size using the instructions below.
- Select the nearest standard sized bag from the lists on the data sheets.
- Request a sample of the bag.
- Test the fit the item in the bag.

Shielding Bag Size Approximation:

Bag Width = Item Height + Item Width + 1 inch
Bag Length = Item Height + Item Length + 1.5 inches

Barrier Bag Size Approximation:

Bag Width = Item Height + Item Width + 1 inch
Bag Length = Item Height + Item Length + 2.5 inches

The length of barrier bags may be extended further to allow for multiple vacuum sealing cycles.

Open Top

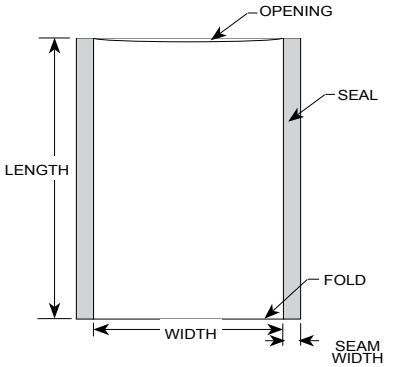

ZipTop

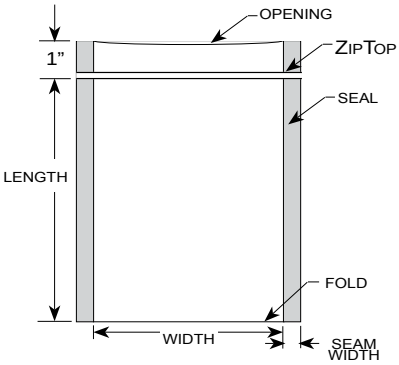

Measuring a Bag

Width is measured from inside seam to inside seam.
Length is measured from the top edge to the bottom fold.
Opening is in the “width” dimension.

How To Specify a 3M™ Static Shielding or Moisture Barrier Bag

BAG MARKINGS

3M uses hot stamping to mark stock bags with the appropriate industry standard ESD or Moisture warning and a lot number for traceability. Custom hot stamping and bag printing are also available. 3M can also pre-apply labels to bags.

Hot Stamping
A packaging industry method for marking bags by thermo-mechanical transfer of pigment to the bag.



Printing
A method of printing ink to bags using a press plate. Produces higher quality marking that hot stamping.



Labeling
Pre-applies a label to the bag. Saves you labor time and provides consistent label location.



BAG FEATURES

3M can provide bags with these features to simplify your packing process.

ZipTop
A recloseable bag simplifies access to parts.



Tear Notch
If you heat seal the bag closed, a tear notch makes it easy for your customer to open it.

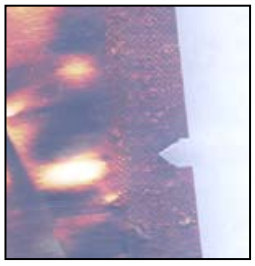

Extended Lip
An over sized lip at the opening improves part insertion, and is easy to close with a label.



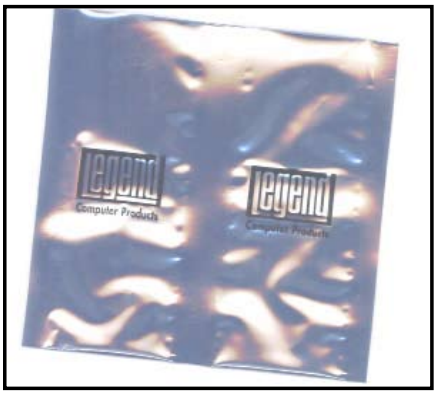

Compartment Bag
A bag with 2 or more separate compartments allows paperwork to travel safely with parts. Or allows multiple parts and part kits to be shipped together.

Bottom Sealed Bags
A heat seal across the bag fold is helpful with locating the bag in some automated packaging equipment.

