SHINDENGEN

General Purpose Rectifiers

SIL Bridges

D25XB80

800V 25A

FEATURES

- Thin Single In-Line Package
- High current capacity with Small Package
- High IFSM
- Superior Thermal Conductivity

APPLICATION

- Switching power supply
- Home Appliances, Office Equipment
- Factory Automation, Inverter

OUTLINE DIMENSIONS

Case : 5S

Unit : mm

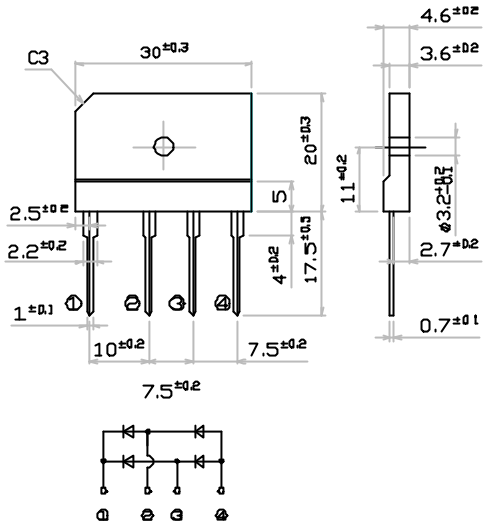

RATINGS

● Absolute Maximum Ratings (If not specified Tc=25°C)

Item	Symbol	Conditions	Ratings	Unit
Storage Temperature	Tstg		-40～150	°C
Operating Junction Temperature	Tj		150	°C
Maximum Reverse Voltage	V_{RM}		800	V
Average Rectified Forward Current	I_O	50Hz sine wave, R-load With heatsink Tc=98°C	25	A
		50Hz sine wave, R-load Without heatsink Ta=25°C	3.5	
Peak Surge Forward Current	I_{FSM}	50Hz sine wave, Non-repetitive 1cycle peak value, Tj=25°C	350	A
Current Squared Time	I^2t	1ms≦t＜10ms Tj=25°C	300	A^2s
Dielectric Strength	Vdis	Terminals to case, AC 1 minute	2.5	kV
Mounting Torque	TOR	(Recommended torque : 0.5N･m)	0.8	N･m

● Electrical Characteristics (If not specified Tc=25°C)

Item	Symbol	Conditions	Ratings	Unit
Forward Voltage	V_F	I_F=12.5A, Pulse measurement, Rating of per diode	Max.1.05	V
Reverse Current	I_R	$V_R=V_{RM}$, Pulse measurement, Rating of per diode	Max.10	μA
Thermal Resistance	θjc	junction to case With heatsink	Max.1.0	°C/W
	θjl	junction to lead Without heatsink	Max.5	
	θja	junction to ambient Without heatsink	Max.22	

Copyright & Copy;2000 Shindengen Electric Mfg.Co.Ltd

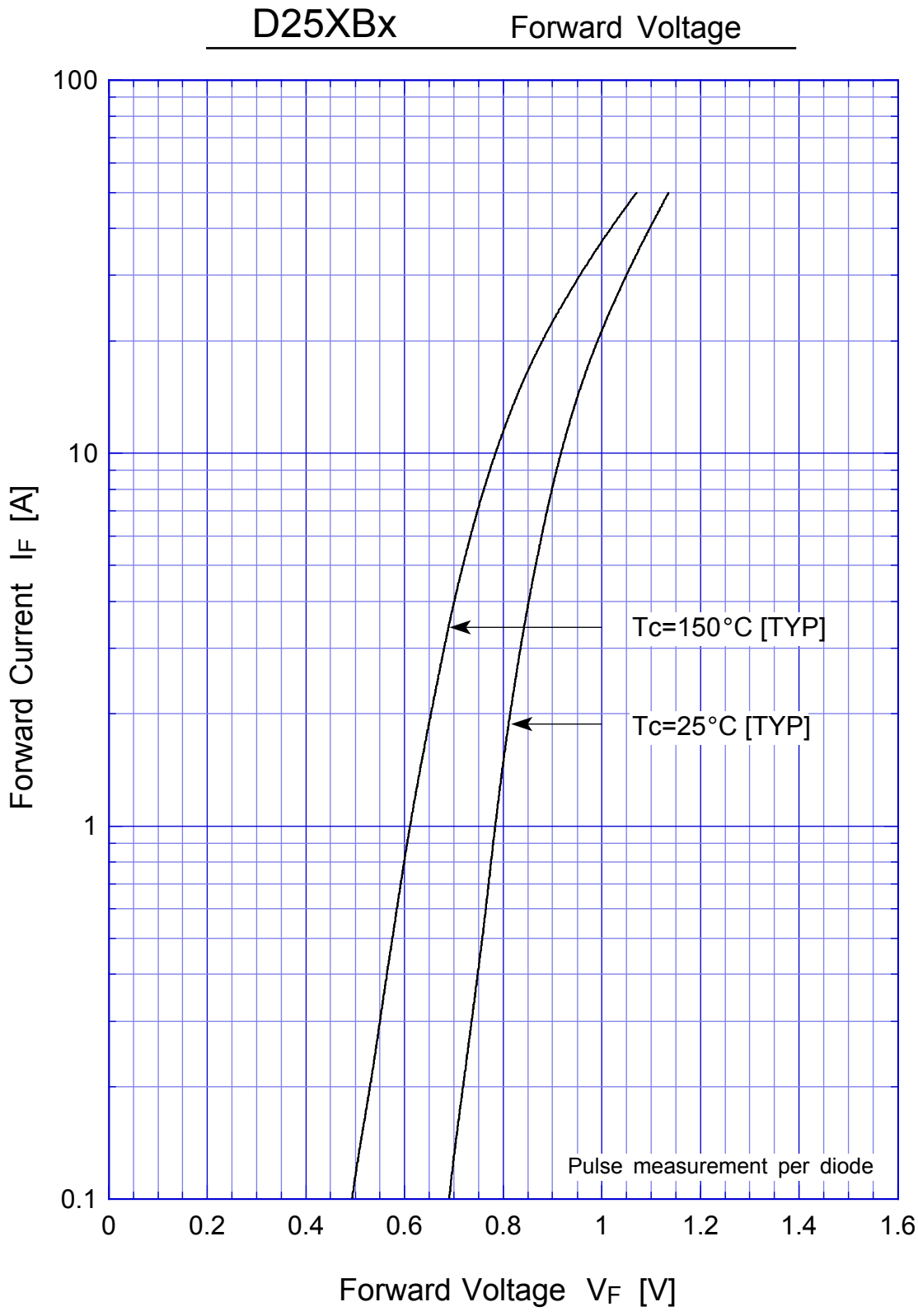
D25XBx
Forward Voltage
100
10
1
0.1
Forward Current IF [A]
Tc=150°C [TYP]
Tc=25°C [TYP]
Pulse measurement per diode
0
0.2
0.4
0.6
0.8
1
1.2
1.4
1.6
Forward Voltage VF [V]

D25XBx Forward Power Dissipation

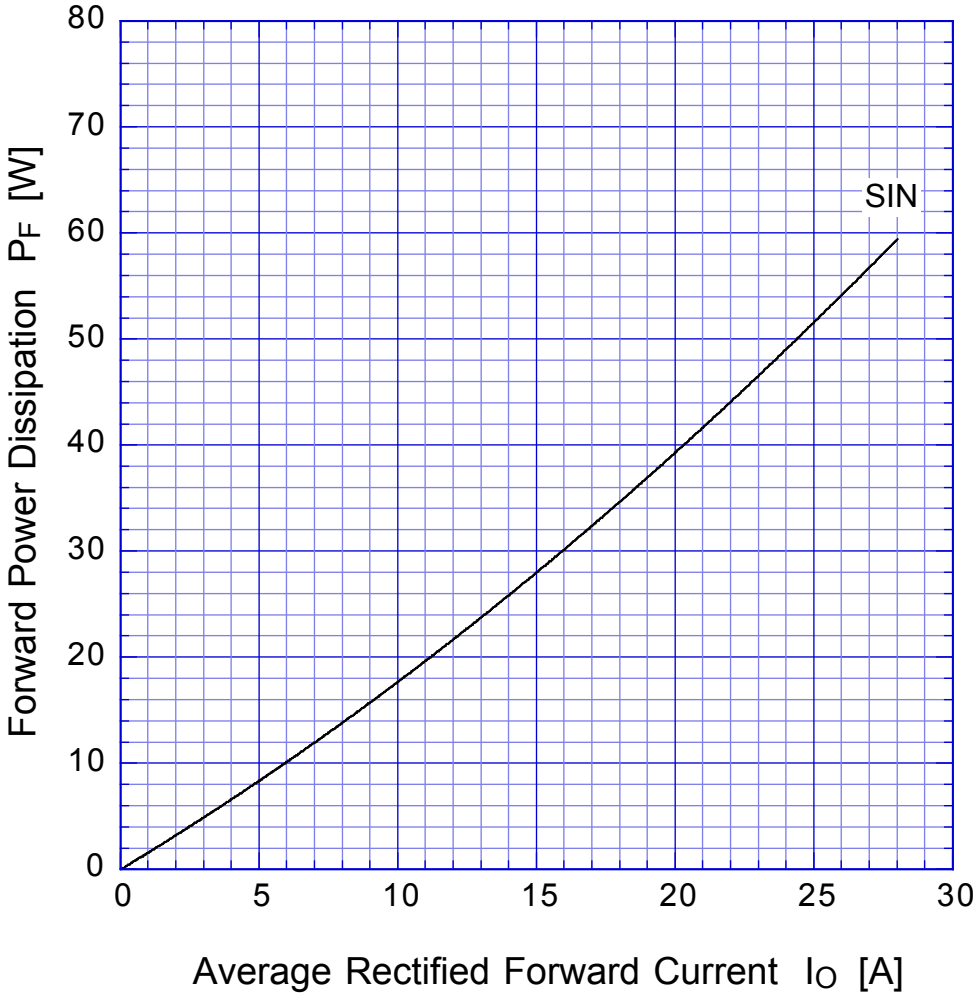

Tj = 150°C
Sine wave

D25XBx Derating Curve

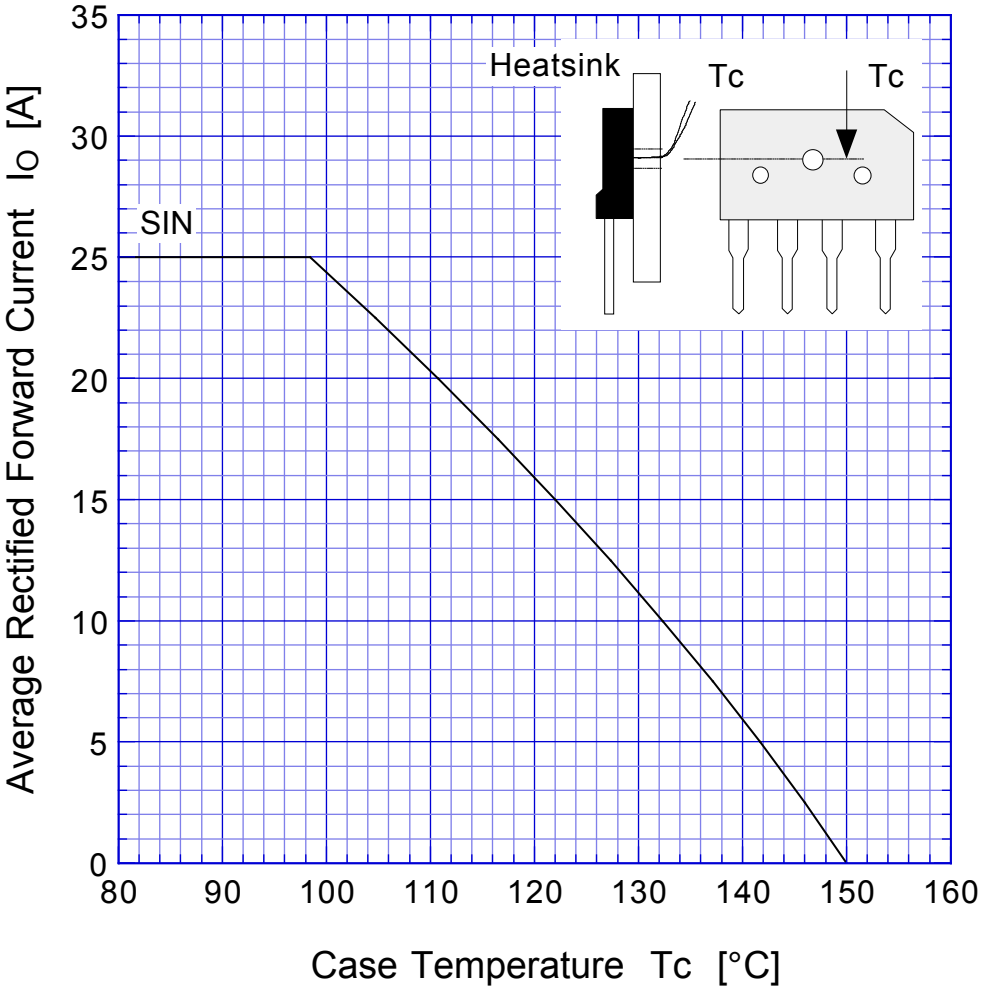

Sine wave
R-load
with heatsink

D25XBx Derating Curve

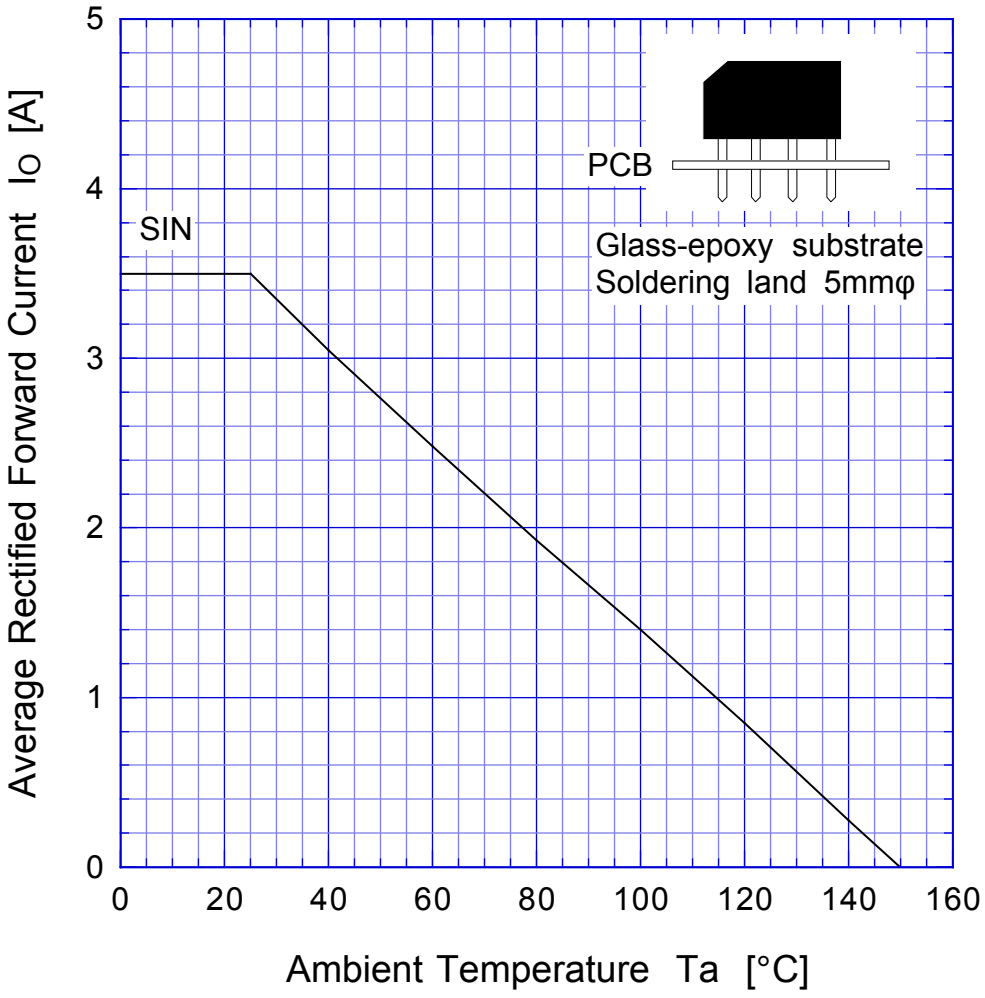

Sine wave
R-load
Free in air

D25XBx Peak Surge Forward Capability

