D2082UK

MECHANICAL DATA

TetraFET
40W – 28V – 1.0GHz

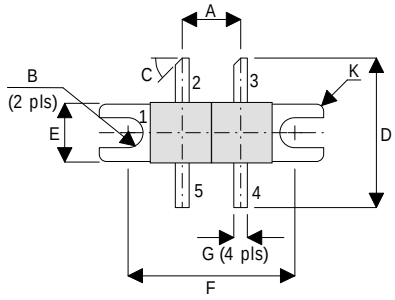

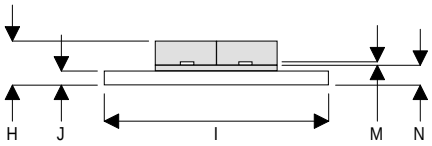

DIM	mm	Tol.	Inches	Tol.
A	6.45	0.13	0.254	0.005
B	1.65R	0.13	0.65R	0.005
C	45°	5°	45°	5°
D	16.51	0.76	0.650	0.03
E	6.47	0.13	0.255	0.005
F	18.41	0.13	0.725	0.005
G	1.52	0.13	0.060	0.005
H	4.82	0.25	0.190	0.010
I	24.76	0.13	0.975	0.005
J	1.52	0.13	0.060	0.005
K	0.81R	0.13	0.032R	0.005
M	0.13	0.02	0.005	0.001
N	2.16	0.13	0.085	0.005

PIN 1 SOURCE (COMMON) PIN 2 DRAIN 1

PIN 3 DRAIN 2 PIN 4 GATE 2

PIN 5 GATE 1

ELECTRICAL CHARACTERISTICS (T_{case} = 25°C unless otherwise stated)

Parameter		Test Conditions	Min.	Typ.	Max.	Unit
PER SIDE						
BV_{DSS}	Drain–Source Breakdown Voltage	I = 50mA	65			V
I_{DSS}	Zero Gate Voltage Drain Current	V = 28V			2	mA
I_{GSS}	Gate Leakage Current	V = 20V			1	µA
$V_{GS(th)}$	Gate Threshold Voltage	I = 10mA	1		7	V
g_m	*	V = 10V I = 2A T = 300µS		1.6		mhos
C_{iss}	Input Capacitance	V_{DS} = 0V V_{GS} = -5V		86		pF
C_{oss}	Output Capacitance	V = 28V		35		pF
C_{rss}	Reverse Transfer Capacitance	V = 28V		2		pF
$V_{GS(th)match}$	Gate Threshold Matching Voltage Between Sides	I_D = 10mA V_{DS} = V_{GS}			0.1	V
TOTAL DEVICE						
P_O = 40W F = 1GHz V = 28V I_{DQ} = 1.6A Thermal Resistance = 1.0 °C / W						

HAZARDOUS MATERIAL WARNING

The ceramic portion of the device between leads and metal flange is beryllium oxide. Beryllium oxide dust is highly toxic and care must be taken during handling and mounting to avoid damage to this area.

THESE DEVICES MUST NEVER BE THROWN AWAY WITH GENERAL INDUSTRIAL OR DOMESTIC WASTE.