Product Specification

D10040270GT

GaAs Power Doubler, 40 – 1000MHz, 27.0dB min. Gain @ 1GHz, 375mA max. @ 24VDC

FEATURES

- Excellent linearity
- Superior return loss performance
- Extremely low distortion
- Optimal reliability
- Low noise
- Unconditionally stable under all terminations

APPLICATION

- 40 to 1000 MHz CATV amplifier systems

DESCRIPTION

- Hybrid Power Doubler amplifier module employing GaAs die

D10040270GT

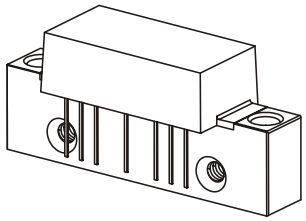

GaAs Power Doubler Hybrid
40 – 1000MHz
27.0dB min. Gain @ 1GHz
375mA max. @ 24VDC

LIMITING VALUES

In accordance with the Absolute Maximum Rating System (IEC 60134)

SYMBOL	PARAMETER	MIN.	MAX.	UNIT
V_i	RF input voltage (single tone)	-	75	dBmV
V_{ov}	DC supply over-voltage (5 minutes)	-	30	V
T_{stg}	storage temperature	- 40	+ 100	°C
T_{mb}	operating mounting base temperature	- 30	+ 100	°C

CHARACTERISTICS

Table 1: S-Parameter, Noise Figure, DC Current; V_B = 24V; T_{mb} = 30°C; Z_S = Z_L = 75 Ω

SYMBOL	PARAMETER	CONDITIONS	MIN.	TYP.	MAX.	UNIT
G_p	power gain	f = 50 MHz	26.0	26.5	27.0	dB
		f = 1000 MHz	27.0	28.0	28.5	dB
SL	slope [1)]	f = 40 to 1000 MHz	0.5	1.5	2.0	dB
FL	flatness of frequency response	f = 40 to 1000 MHz (Peak to Valley)	-		0.8	dB
S_{11}	input return loss	f = 40 to 320 MHz	20.0		-	dB
		f = 320 to 640 MHz	19.0		-	dB
		f = 640 to 870 MHz	17.0		-	dB
		f = 870 to 1000 MHz	16.0		-	dB
S_{22}	output return loss	f = 40 to 320 MHz	20.0		-	dB
		f = 320 to 640 MHz	19.0		-	dB
		f = 640 to 870 MHz	18.0		-	dB
		f = 870 to 1000 MHz	17.0		-	dB
F	noise figure	f = 50 to 1000 MHz	-	4.5	5.0	dB
I_{tot}	total current consumption (DC)			360.0	375.0	mA

Notes:
1) The slope is defined as the difference between the gain at the start frequency and the gain at the stop frequency.

CHARACTERISTICS

Table 2: Distortion data 40 – 550 MHz; V_B = 24V; T_{mb} = 30°C; Z_S = Z_L = 75 Ω

SYMBOL	CONDITIONS	MIN.	TYP.	MAX.	UNIT
CTB	132 ch. flat; Vo = 44 dBmV; [1)]	-	- 64	- 62	dBc
XMOD	132 ch. flat; Vo = 44 dBmV; [1)]	-	- 60	- 58	dBc
CSO	132 ch. flat; Vo = 44 dBmV; [1)]	-	-65	-63	dBc

Notes:
1) 132 channels, NTSC frequency raster: 55.25 MHz to 865.25 MHz, +44 dBmV flat output level.

Composite Second Order (CSO)
The CSO parameter (both sum and difference products) is defined by the NCTA.

Composite Triple Beat (CTB)
The CTB parameter is defined by the NCTA.

Cross Modulation (XMOD)
Cross modulation (XMOD) is measured at baseband (selective voltmeter method), referenced to 100% modulation of the carrier being tested.

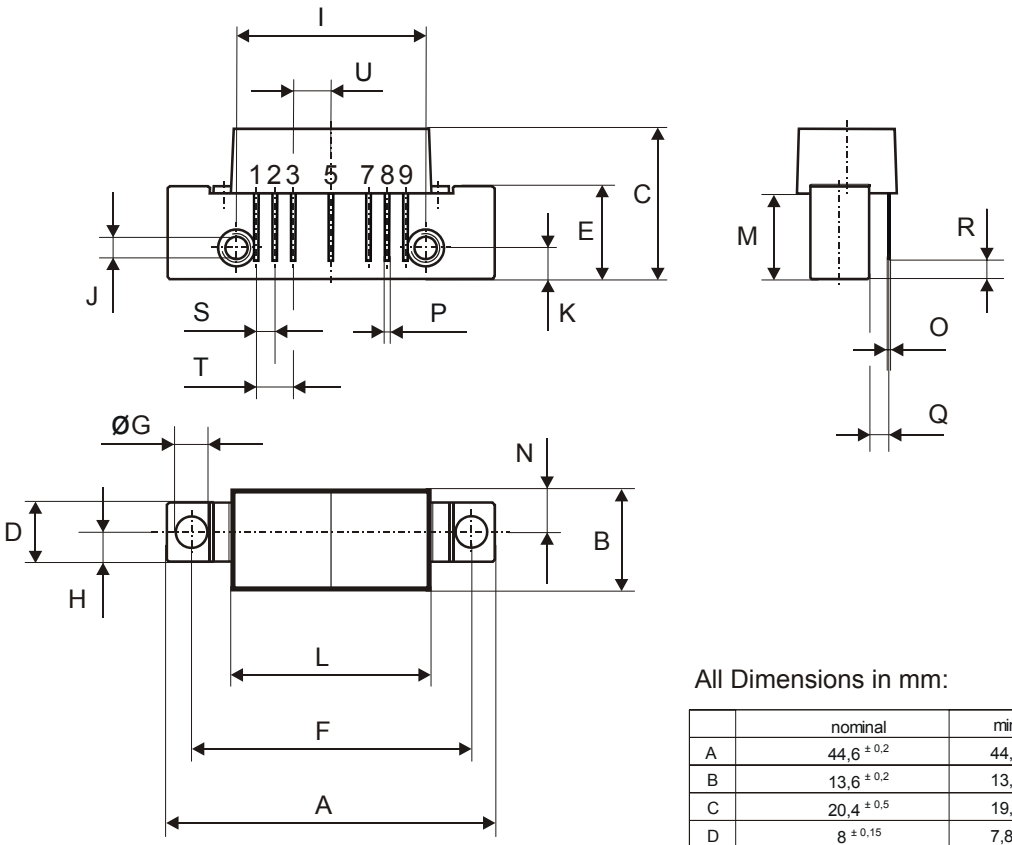

All Dimensions in mm:

	nominal	min	max
A	44,6 ± 0,2	44,4	44,8
B	13,6 ± 0,2	13,4	13,8
C	20,4 ± 0,5	19,9	20,9
D	8 ± 0,15	7,85	8,15
E	12,6 ± 0,15	12,45	12,75
F	38,1 ± 0,2	37,9	38,3
G	4 +0,2 / -0,05	3,95	4,2
H	4 ± 0,2	3,8	4,2
I	25,4 ± 0,2	25,2	25,6
J	UNC 6-32	-	-
K	4,2 ± 0,2	4,0	4,4
L	27,2 ± 0,2	27,0	27,4
M	11,6 ± 0,5	11,1	12,1
N	5,8 ± 0,4	5,4	6,2
O	0,25 ± 0,02	0,23	0,27
P	0,45 ± 0,03	0,42	0,48
Q	2,54 ± 0,3	2,24	2,84
R	2,54 ± 0,5	2,04	3,04
S	2,54 ± 0,25	2,29	2,79
T	5,08 ± 0,25	4,83	5,33
U	5,08 ± 0,25	4,83	5,33

0 5 10mm
scale

Pinning:

1	2	3	4	5	6	7	8	9
INPUT	GND	GND		+VB		GND	GND	OUTPUT

Notes:

European Projection

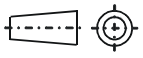

DEFINITIONS

Data Sheet Status	
Objective Product Specification	This data sheet contains target or goal specifications for product development.
Preliminary Product Specification	This data sheet contains preliminary data; supplementary data may be published later.
Product Specification	This data sheet contains final product specifications.
Limiting values	
Limiting values given are in accordance with the Absolute Maximum Rating System (IEC 60134). Stress above one or more of the limiting values may cause permanent damage to the device. These are stress ratings only and operation of the device at these or at any other conditions above those given in the Characteristics sections of the specification is not implied. Exposure to limiting values for extended periods may affect device reliability.	
Application information	
Where application information is given, it is advisory and does not form part of the specification.	

Premier Devices reserves the right to make changes without further notice to any products herein.
Premier Devices makes no warranty representation or guarantee regarding the suitability of its products for any particular purpose, nor does Premier Devices assume any liability arising out of the application or use of any product or circuit, and specifically disclaims any and all liability, including without limitation consequential or incidental damages. “Typical” parameters which may be provided in Premier Devices datasheets and/or specifications can and do vary in different applications and actual performance may vary over time. All operating parameters, including “Typicals” must be validated for each customer application by customer´s technical experts. Premier Devices does not convey any license under its patent rights nor the rights of others. Premier Devices products are not designed, intended, or authorized for use as components in systems intended for surgical implant into the body, or other applications intended to support or sustain life, or for any other application in which the failure of the Premier Devices product could create a situation where personal injury or death may occur. Should Buyer purchase or use Premier Devices products for any such unintended or unauthorized application, Buyer shall indemnify and hold Premier Devices and its officers, employees, subsidiaries, affiliates, and distributors harmless against all claims, costs, damages, and expenses, and reasonable attorney fees arising out of, directly or indirectly, and claim of personal injury or death associated with such unintended or unauthorized use, even if such claim alleges that Premier Devices was negligent regarding the design or manufacture of the part.

© Premier Devices Germany GmbH 2006

How to contact us:

Premier Devices Germany GmbH

Loeffelholzstrasse 20, D-90441 Nuernberg, Germany
Phone: +49 (0) 911 9411 233, FAX: +49 (0) 911 9411 198,
Email: sales.germany@premierdevices.com, Internet: http://www.premierdevices.de/