D-18F 3PDT, Center Off, 50 Amps, 115/200 VAC, 400 Hz



Features:
- 3PDT Center Off Main Contacts
- Transient Suppression
- Mechanically Interlocked
- 115/200 VAC, 400 Hz
- 50 Amps
- High Reliability
- Meets many requirements of MIL-R-6106

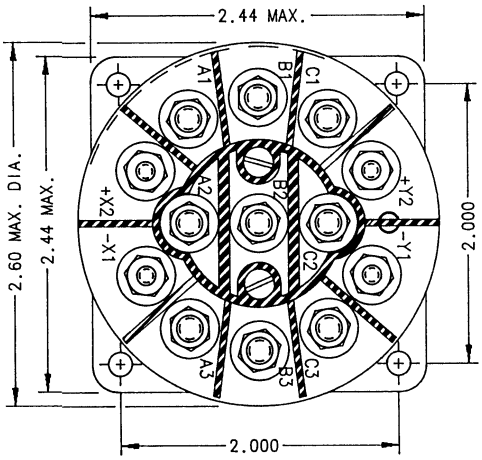

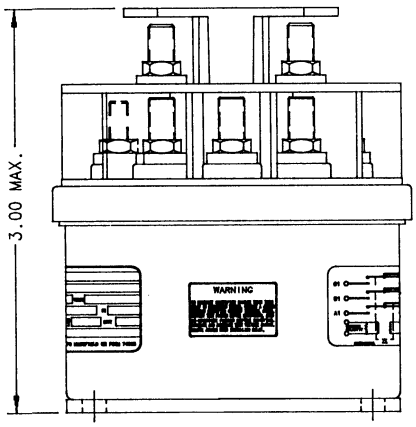

Dimensions for this product are expressed in inches.
Multiply values by 25.4 for millimeters.

CONTACTOR CONFIGURATION

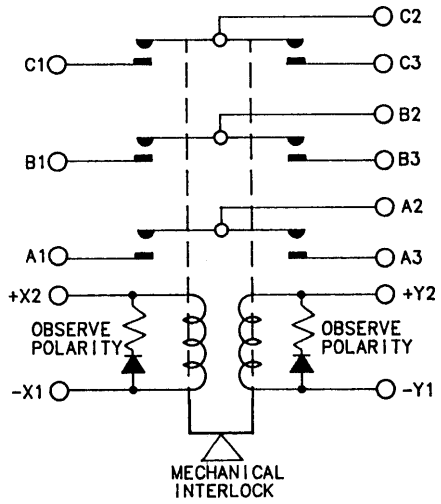

PRODUCT SPECIFICATIONS	
Construction	Gasket Sealed, Vented
Main Contacts:	
Configuration	3PDT Center Off
Voltage (Nominal)	115/200 VAC, 400 Hz
Current (Resistive)	50 Amps
Coil Data:	
Duty Cycle	Continuous
Voltage (Nominal)	28 VDC
Pick-Up Voltage	18 VDC Maximum
Drop-Out Voltage	1.5 - 7 VDC
Coil Current @ 28 VDC & +25°C	180 Milliamperes Maximum
Operating Temperature	-55°C to +71°C
Life:	
Electrical	50,000 Cycles
Mechanical	100,000 Cycles
Weight Maximum	15 Oz.

Notes:

For factory-direct application assistance, contact the HARTMAN product team at (419) 521-9500, Fax (419) 526-2749.

© 2004 by Tyco Electronics Corporation. All Rights Reserved.
HARTMAN and TYCO are trademarks.

Catalog (web doc only)
Revised 5-04

www.tycoelectronics.com

Dimensions are in inches and millimeters unless otherwise specified. Values in brackets are metric equivalents.

Dimensions are shown for reference purposes only. Specifications subject to change.

USA: 1-800-522-6752
Canada: 1-905-470-4425
Mexico: 01-800-733-8926
C. America: 52-55-5-729-0425

South America: 55-11-3611-1514
Hong Kong: 852-2735-1628
Japan: 81-44-844-8013
UK: 44-141-810-8967