Clearance/Creepage 8mm CZ-3702
60A_{rms} Accurate Coreless Current Sensor

1. General Description

CZ-3702 is an open-type current sensor using Hall sensors, which outputs the analog voltage proportional to the AC/DC current. Group III-V semiconductor thin film is used as the Hall sensor, which enables the high-accuracy and high-speed current sensing. Coreless ultra-small surface mount package realizes the space-saving. Also, the low primary conductor resistance suppresses heat generation to achieve the 60Arms continuous current. Existing coreless current sensors have an accuracy disadvantage from degradations caused by a disturbed magnetic field. The CZ-370x series has a built-in stray magnetic field reduction function to suppress this effect. The CZ-370x series is also UL 61800-5-1 safety compliant, which is an excellent fit for industrial AC drives, servo motors, etc. The CZ-370x series has a large variety of linear measurement ranges, from ±5.3A (CZ-3700), to ±180A, (CZ-3706). This enables the designer to use the same board design across different products and helps the user to expand the options to different current ratings.

2. Features

- ☐ Compliant with safety standard of UL61800-5-1 (Clearance, Creepage distance ≧ 8.0mm)
- ☐ Certified with safety standards of UL-1577 and IEC/UL60950-1
- ☐ Maximum Primary Current : 60A_{rms}
- ☐ High-accuracy : 0.5%F.S.(T_a=0～90°C Typ.)
- ☐ Quite small primary conductor resistance : 0.27mΩ Typ.
- ☐ Fast response time : 1μs Typ.
- ☐ Stray magnetic field reduction function
- ☐ Small-sized surface mount package（12.7mm×10.9mm×2.25mm）
- ☐ Differential output with VREF pin
- ☐ Isolation Voltage：3.0kV（AC50Hz，60s）
- ☐ Ratiometric output

3. Applications

- ☐ AC motors
- ☐ DC motors
- ☐ UPS
- ☐ General Inverters
- ☐ Power conditioners

Also, CZ-3702 is suitable for other applications which are required isolation with small size and suppressing heat generation.

4. Table of Contents

1. General Description 1
2. Features 1
3. Applications 1
4. Table of Contents 2
5. Block Diagram and Functions 3
6. Pin Configurations and Functions 4
7. Absolute Maximum Ratings 5
8. Recommended Operating Conditions 5
9. Electrical Characteristics 6
10. Characteristic Definitions 8
11. External Circuits Example 10
12. Board Layout for measuring thermal resistance 10
13. Package 11
14. Reliability Tests 14
15. Precautions 15

IMPORTANT NOTICE 16

5. Block Diagram and Functions

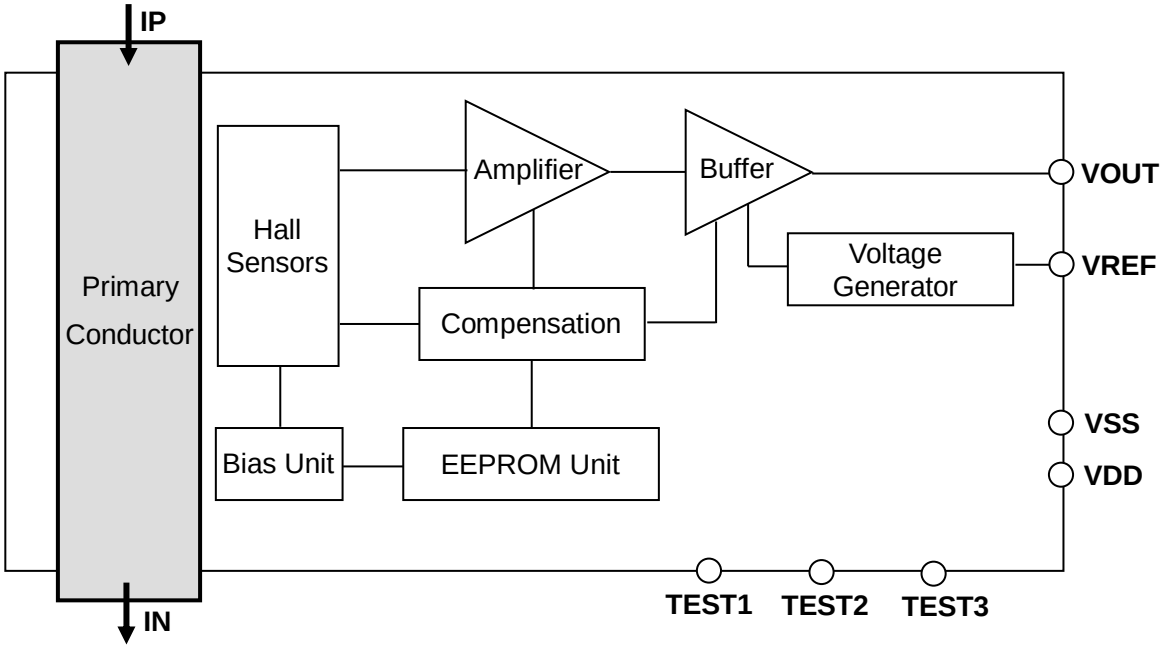

Figure 1. Block diagram of CZ-3702

Table 1. Explanation of circuit blocks

Circuit Block	Function
Primary Conductor	A device has the primary conductor built-in.
Hall Sensors	Hall elements which detect magnetic flux density generated from the measured current.
Amplifier	Amplifier of Hall elements' output.
Buffer	Output buffer with gain. This block outputs the voltage (V_{OUT}) proportional to the current applied to the primary conductor.
Compensation	Compensation circuit which adjusts the temperature drifts of sensitivity and zero-current voltage.
Bias Unit	Drive circuit for Hall elements.
EEPROM Unit	Non-volatile memory for setting adjustment parameters.
Voltage Generator	Reference voltage generating circuit of V_{OUT}.

6. Pin Configurations and Functions

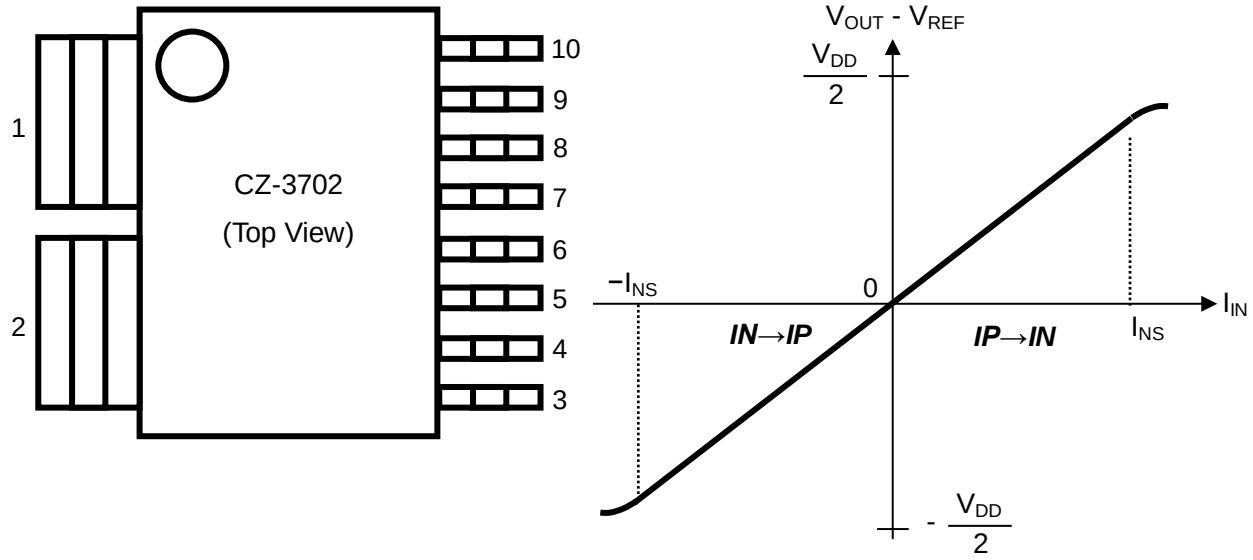

Figure 2. Pin configurations and typical output characteristics of CZ-3702

Table 2. Pin configuration and functions of CZ-3702

Pin No.	Pin Name	I/O	Type	Function
1	IP	I	—	Primary conductor pin (+)
2	IN	I	—	Primary conductor pin (-)
3	VSS	GND	Power	Ground pin (GND)
4	TEST1	—	—	Test pin (Recommended external connection : GND)
5	VREF	O	Analog	Reference output pin
6	VOUT	O	Analog	Sensor output pin
7	VDD	PWR	Power	Power supply pin (5V)
8	TEST2	—	—	Test pin (Recommended external connection : OPEN)
9	TEST3	—	—	Test pin (Recommended external connection : OPEN)
10	VSS	GND	Power	Ground pin (GND)

7. Absolute Maximum Ratings

Table 3. Absolute maximum ratings

Parameter	Symbol	Min.	Max.	Units	Notes
Supply Voltage	V_{DD}	-0.3	6.5	V	VDD pin
Analog Output Current	I_{OUT}	-10	10	mA	VOUT pin, VREF pin
Junction Temperature	T_j	-40	150	°C	
Storage Temperature	T_{STG}	-40	150	°C	

WARNING:
Operation at or beyond these limits may result in permanent damage to the device. Normal operation is not guaranteed at these extremes.

8. Recommended Operating Conditions

Table 4. Recommended operating conditions

Parameter	Symbol	Min.	Typ.	Max.	Units	Notes
Supply Voltage	V_{DD}	4.5	5.0	5.5	V	VDD pin
Sensor Output Load Capacitance 1	C_{LVOUT}			1000	pF	Between VOUT pin and VSS pin
Reference Output Load Capacitance 2	C_{LVREF}			1000	pF	Between VREF pin and VSS pin
Sensor Output Load Resistance 1	R_{LVOUT}	3			kΩ	Between VOUT pin and VSS pin Between VOUT pin and VDD pin
Reference Output Load Resistance 2	R_{LVREF}	3			kΩ	Between VREF pin and VSS pin Between VREF pin and VDD pin
Operating Ambient Temperature	T_a	-40		105	°C	
Case Temperature Note 1)	T_c	-40		130	°C	Compliant with safety standard of UL61800-5-1
Thermal Resistance junction to ambient	θ_{ja}		32		°C /W	Board Layout is Figure 7.
Maximum Primary Current (RMS)	I_{RMSmax}			60	A_{rms}	Continuous DC value or RMS value which can be applied to primary conductor

WARNING:
Electrical characteristics are not guaranteed when operated at or beyond these conditions.

Note1. Continuous 60A_{rms} current can be flowed through this IC, and even a larger current can be flowed transiently. Using as your system complied with safety standard of UL61800-5-1, the case temperature of this IC should be less than 130°C.

9. Electrical Characteristics

Table 5. Electrical Characteristics

Conditions(unless otherwise specified) : T_a=25°C, V_{DD}=5V

Parameter	Symbol	Conditions	Min.	Typ.	Max.	Units
Current Consumption	I_{DD}	I_{IN}=0A, No loads		20	25	mA
Sensitivity Note 2)	V_h	I_{IN}=±20A (≦5A 1ms, ＞5A 500μs) V_h=(V_{OUT}-V_{REF})/1A	99	100	101	mV/A
Zero-Current Output Note 2)	V_{of}	I_{IN}=0A, V_{OUT}-V_{REF}	-0.02		0.02	V
Reference Output Voltage Note 6)	V_{REF}		0.5×V_{DD} -0.02	0.5×V_{DD}	0.5×V_{DD} +0.02	V
Linear Sensing Range Note 3)	I_{NS}		-21.5		21.5	A
Output Saturation Voltage H Note 4)	V_{satH}	R_{LVOUT}=3kΩ	V_{DD}-0.3			V
Output Saturation Voltage L Note4)	V_{satL}	R_{LVOUT}=3kΩ			0.3	V
Linearity Error Note 5) Note 6)	ρ	T_a=-40～105°C F.S.=V_{satH}-V_{satL}		±0.13	±0.15	%F.S.
Rise Response Time Note 4)	t_r	I_{IN} 90% to V_{OUT} 90%, C_{LVOUT}= C_{LVREF}=1000pF		1		μs
Fall Response Time Note 4)	t_f	I_{IN} 10% to V_{OUT} 10%, C_{LVOUT}= C_{LVREF}=1000pF		1		μs
Input Current Equivalent Noise	I_{Nrms}	I_{IN}=0A ,DC～400kHz		30		mA_{rms}
Ratiometric Error of Sensitivity	V_{h-R}	V_{DD}=4.5V～5.5V	-1.0		1.0	%
Ratiometric Error of Zero-Current Output	V_{of-R}	V_{DD}=4.5V～5.5V I_{IN}=0A	-0.3		0.3	%F.S.
Stray Magnetic Field Reduction	E_{bc}	Equivalent to Zero-Current output drift -10mT < Stray Magnetic Field <10mT		0.01		A/mT
dV/dt Settling Time Note 4) Note 7)	t_{dVdt}	200V/μs 200V		2		μs
Primary Conductor Resistance	R_P			0.27		mΩ
Isolation Voltage Note 8)	V_{INS}	AC50Hz, 60s	3.0			kV_{rms}
Isolation Resistance Note 3)	R_{INS}	DC1kV	500			MΩ
Retention Time of EEPROM data	EEP_{RT}	T_j < 105°C	10			Year

Table 6. Temperature drift characteristics

Conditions (unless otherwise specified) ： V_{DD}=5V

Parameter	Symbol	Conditions	Min.	Typ.	Max.	Units
Temperature Drift of Sensitivity Note 5) Note 6) Note 9)	$V_{h\text{-}d}$	T_a=0～90°C	-0.6	0.3	0.6	%
		T_a=0～105°C	-0.6	0.9	1.4	
		T_a=-40～105°C	-0.9	0.9	1.7	
Temperature Drift of Zero-current Output Note 5) Note 6) Note 9)	$V_{of\text{-}d}$	T_a=0～90°C I_{IN}=0A		±1.4	±3.8	mV
		T_a=0～105°C I_{IN}=0A		±1.7	±4.6	
		T_a=-40～105°C I_{IN}=0A		±4.5	±8.1	
Temperature Drift of Reference Output Note 6) Note 9)	$V_{REF\text{-}d}$	T_a=-40～105°C		±10		mV
Total Accuracy Note 5) Note 6)	E_{total}	T_a=0～90°C F.S.=V_{satH}-V_{satL}	-0.4	0.5	0.8	%F.S.
		T_a=0～105°C F.S.=V_{satH}-V_{satL}	-0.4	0.8	1.1	
		T_a=-40～105°C F.S.=V_{satH}-V_{satL}	-0.6	1.0	1.6	

Note 2) These values can be drifted by long-term use or reflow process. Please ’14.Reliability Tests’ for the reference of drift values.

Note 3) These parameters are guaranteed by design.

Note 4) These parameters are tested in wafer condition.

Note 5) The Typical value is defined as the “average value ± 1σ”of the actual measurement result in a certain lot. The minimum value and the maximum value are defined as “average value ± 3σ”of the same condition.

Note 6) These values can be drifted by long-term use or reflow process.

Note 7) The threshold level of the dV/dt settling time is the convergence value ±2.5mV.

Note 8) This parameter is tested for 1second at 3.6kV_{rms} in mass-production line for all devices.

Note 9) These parameters are defined as the drift from the values at T_a=25°C.

10. Characteristic Definitions

10.1. Sensitivity(V_h), Zero-Current Output (V_{of}), and Linearity Error (ρ) are defined as below:

Sensitivity(V_h) is defined as the slope of the approximate straight line calculated by the least square method, using the data of output voltage (V_{OUT} -V_{REF}) when the primary current (I_{IN}) is swept within the range of linear sensing range (I_{NS}).
The output voltage (V_{OUT} -V_{REF}) when the primary current (I_{IN}) is 0A is the Zero-Current Output (V_{of}).

Linearity Error (ρ) is defined as the ratio of the maximum error voltage (V_d) to the full scale (F.S.), where V_d is the maximum difference between the output voltage (V_{OUT} -V_{REF}) and the approximate straight line .
Definition formula is shown as below:

$$\rho = V_d / \text{F.S.} \times 100$$

Full scale (F.S.) is defined by $V_{satHmin}$ - $V_{satLmax}$.

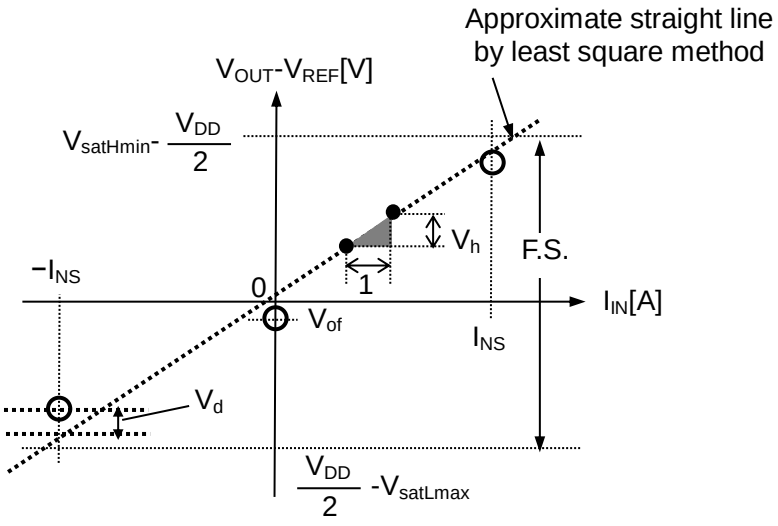

Figure 3. Characteristic definitions of CZ-3702

10.2. Ratiometric Error of Sensitivity is defined as below:

$$V_{h-R} = 100 \times \frac{\left\{\frac{V_h(V_{DD})}{V_h(5V)} - \frac{V_{DD}}{5}\right\}}{\frac{V_{DD}}{5}}$$

10.3. Ratiometric Error of Zero-Current Output is defined as below:

$$V_{of-R} = 100 \times \frac{\left(V_{of}(V_{DD}) - \frac{V_{of}(5V) \times V_{DD}}{5}\right)}{F.S.}$$

10.4. Total Accuracy E_{total} [%F.S.] is defined as below:

$$E_{total} = 100 \times \frac{V_{err}}{F.S.}$$

$$V_{err} = (V_{h-meas} - V_h) \times I_{NS} + V_{of-d} + \rho_{meas} \times F.S.$$

V_{h-meas} : Measured Sensitivity value [mV/A]

V_h : Sensitivity (Typ.) [mV/A]

V_{of-d} : Measured Temperature Drift of Zero-Current Output [mV]

ρ_{meas} : Measured Linearity Error [%F.S.]

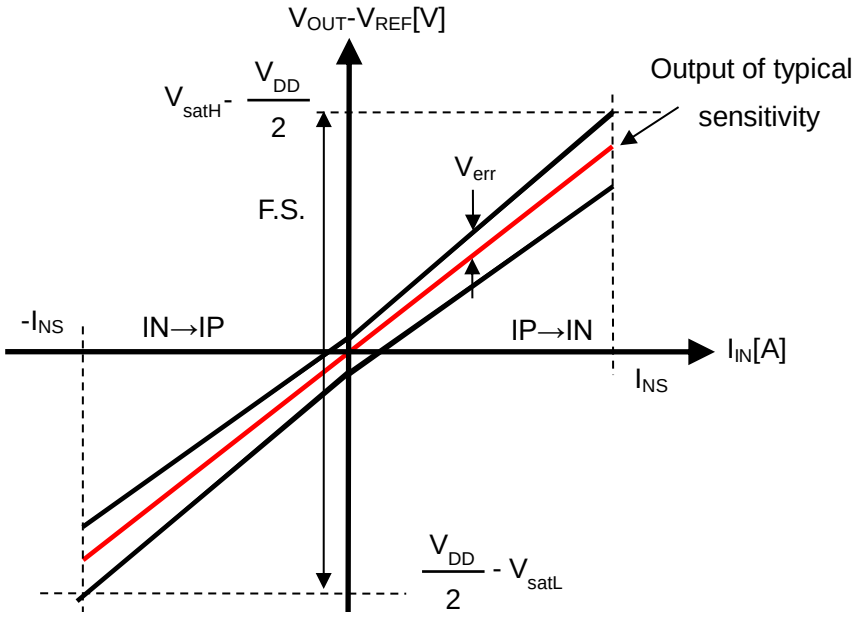

Figure 4. Total Accuracy of CZ-3702

10.5. Rise Response Time t_r [µs] and Fall Response Time t_f [µs]

Rise response time (or fall response time) is defined as the time delay from the 90% (or 10%) of input primary current (I_{IN}) to the 90% (or 10%) of the output voltage (V_{OUT}-V_{REF}) under the pulse input of primary current (Figure 5).

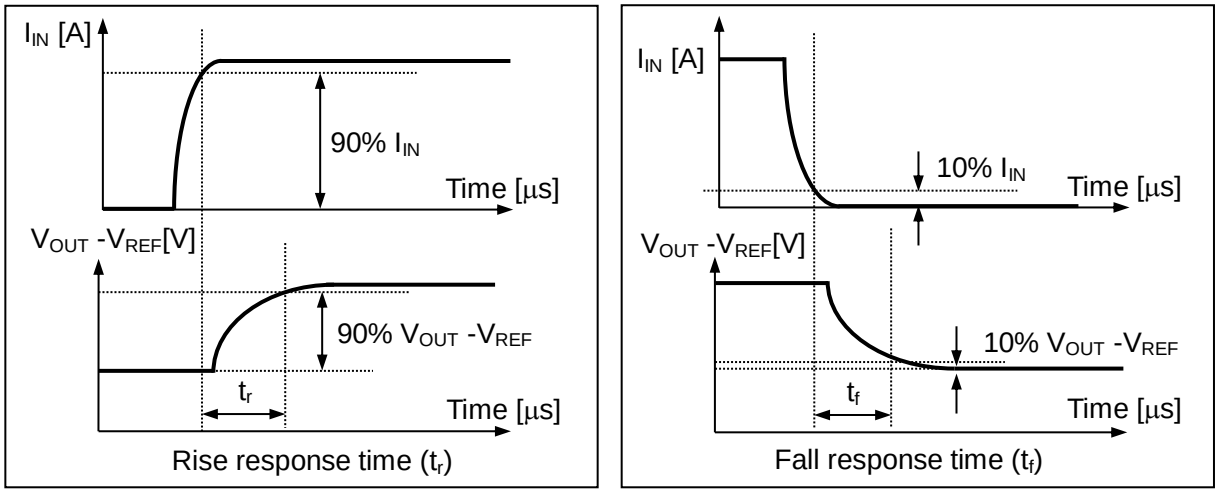

Figure 5. Definition of response time

11. External Circuits Example

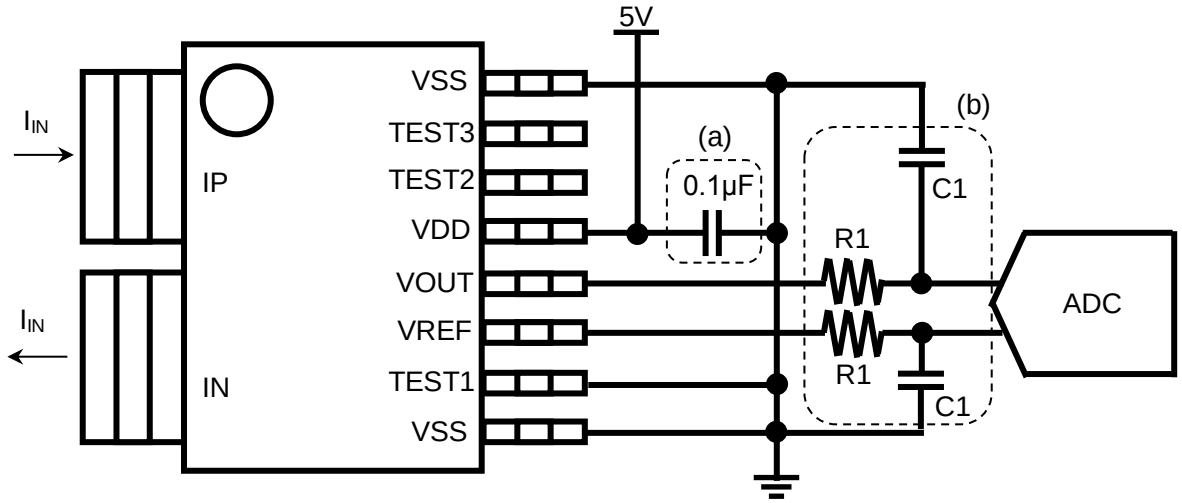

Figure 6. External circuits example

(a) 0.1μF bypass capacitor should be placed close to CZ-3702.

(b) Add a low-pass filter if it is necessary. The C1 values should be fixed in consideration of load conditions.

12. Board Layout for measuring thermal resistance

Table 7. Board information

Board Size	68.58mm×63.5mm
Layer number	4
Copper layer thickness	70μm
Board Thickness	1.6mm

・Top pattern(1st) ・Inner pattern(2nd/3rd VSS) ・Bottom pattern(4th)

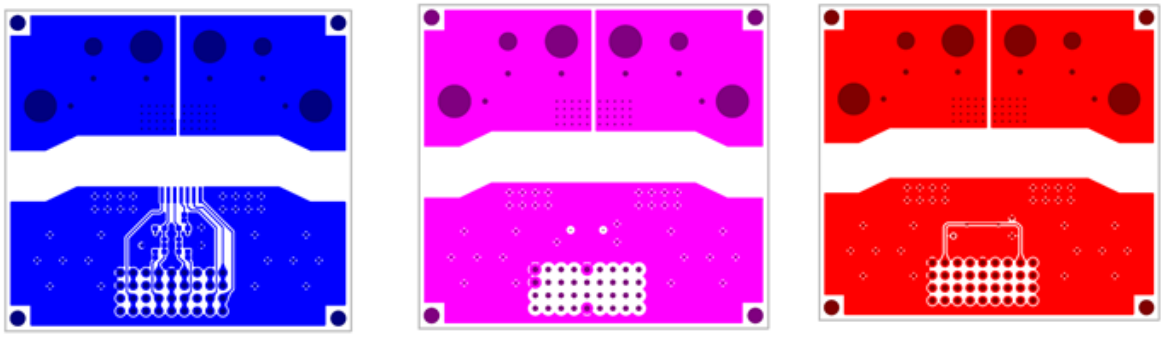

Figure 7. Board layout for measuring thermal resistance of CZ-3702

13. Package

13.1. Outline Dimensions

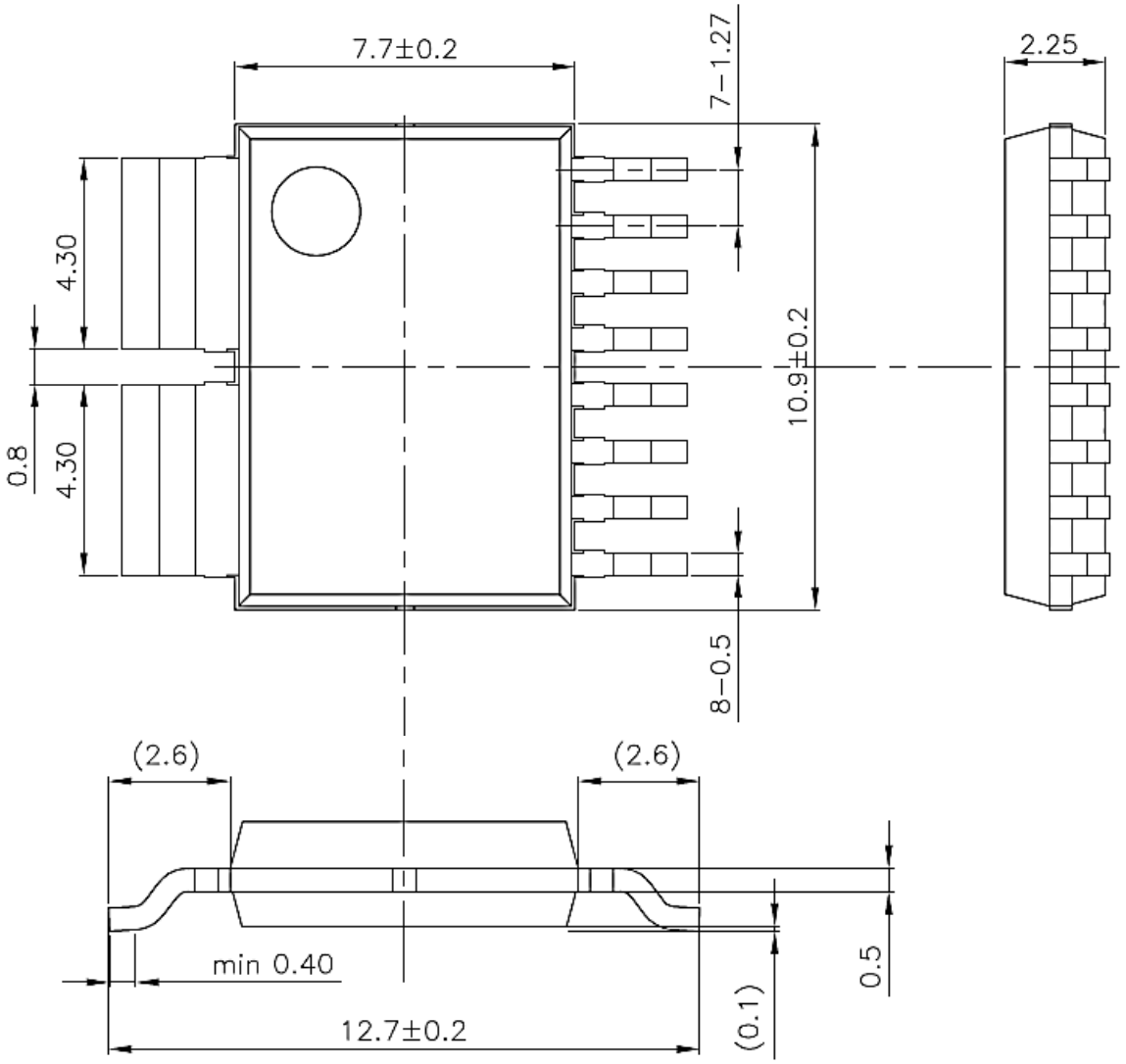

Unit : mm

The tolerances of dimensions without any mention are ±0.1mm.

( ) is a reference values.

Figure 8. Outline dimensions of CZ-3702

Terminals : Cu

Plating for Terminals : Sn-Bi

Package material : RoHS compliant, halogen-free

Table 8. Isolation characteristics of CZ-3702

Parameter	Symbol	Min.	Typ.	Max.	Units
Creepage distance	Cr	8.0			mm
Clearance distance	Cl	8.0			mm

*Flammability standard is V0. (According to UL94)

*Comparative tracking index (CTI) is 600V. Material Group is Ⅰ.

13.2. Standards

・IEC/UL 60950-1 – Information Technology Equipment – Edition 2. (File No.E359197)
・CSA C22.2 NO. 60950-1-07 – Information Technology Equipment – Edition 2. (File No. E359197)
・UL1577－Optical Isolators－Edition 5.(File No. E499004)
・CSA Component Acceptance Service No. 5A－Component Acceptance Service for Optocouplers and Related Devices (File No. E499004)

13.3. Recommended Pad Dimensions

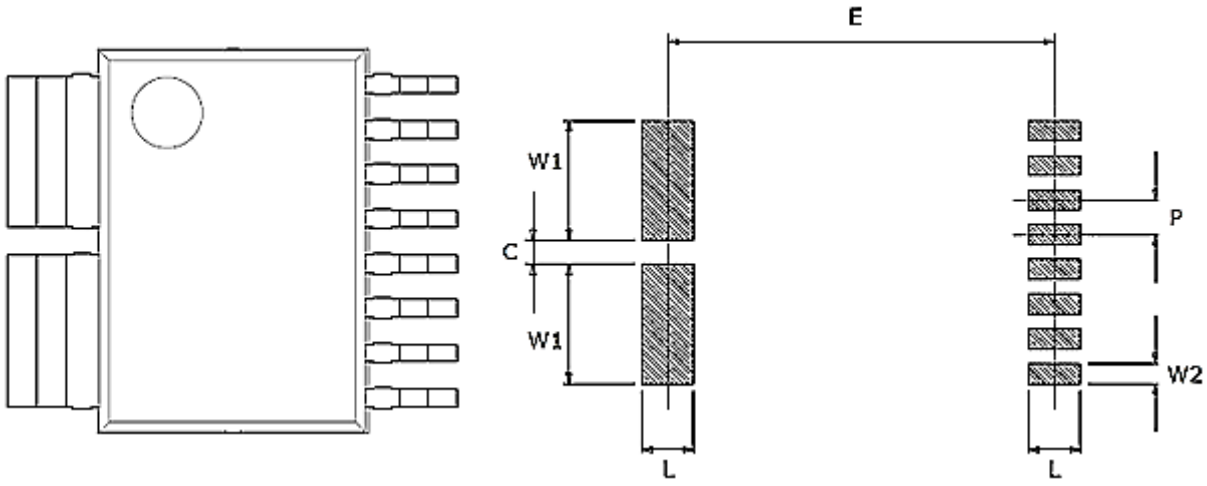

Figure 9. Recommended pad pattern

Table 9. Recommended pad dimensions

L	1.59
E	11.79
W1	4.44
W2	0.64
C	0.66
P	1.27

Unit:mm

If two or more trace layers are used as the current paths, please make enough number of through-holes to flow current between the trace layers. In order to make heat dissipation better, it is recommended that Pad on Via should be provided on the pad of the primary conductor.

13.4. Marking

Production information is printed on the package surface by laser marking. Markings consist of 11 characters excluding AKM logo.

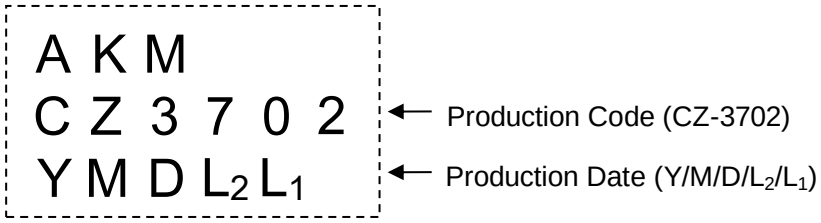

Figure 10. Markings of CZ-3702

Table 10. Production date code table

Year(Y)		Month(M)		Day(D)		Lot number		
Character	Year	Character	Month	Character	Day	Character (L_2)	Character (L_1)	Lot number
7	2017	C	January	1	1	0	1	01
8	2018	D	February	2	2	0	2	02
9	2019	E	March	3	3	0	3	03
A	2020	F	April	4	4	0	4	04
B	2021	G	May	5	5	0	5	05
C	2022	H	June	6	6	⋮	⋮	⋮
D	2023	J	July	7	7			
E	2024	K	August	8	8	6	7	67
F	2025	L	September	9	9	6	8	68
G	2026	M	October	0	10	6	9	69
H	2027	N	November	A	11	7	0	70
J	2028	P	December	B	12	7	1	71
K	2029			C	13	⋮	⋮	⋮
L	2030			D	14			
N	2031			E	15			
P	2032			F	16			
R	2033			G	17			
S	2034			H	18			
T	2035			J	19			
U	2036			K	20			
V	2037			L	21			
W	2038			N	22			
X	2039			P	23			
0	2040			R	24			
1	2041			S	25			
2	2042			T	26			
3	2043			U	27			
4	2044			V	28			
				W	29			
				X	30			
				Y	31			

14. Reliability Tests

Table 11. Test parameters and conditions of reliability tests

No.	Test Parameter	Test Conditions	n	Test Time
1	Temperature Humidity Bias Test	【JEITA EIAJ ED-4701 102】 T_a=85°C, 85%RH, continuous operation	22	500h
2	High Temperature Bias Test	【JEITA EIAJ ED-4701 101】 T_a=150°C, continuous operation	22	500h
3	High Temperature Storage Test	【JEITA EIAJ ED-4701 201】 T_a=150°C	22	500h
4	Low Temperature Operating Test	T_a=−40°C, continuous operation	22	500h
5	Heat Cycle Test	【JEITA EIAJ ED-4701 105】 −65°C⇔ +150°C 30min.⇔ 30min. Tested in vapor phase	22	200 Cycles

Tested samples are pretreated as below before each reliability test:
Desiccation: 125°C/24h → Moisture Absorption: 60°C/60%RH/168h
→ Reflow: 3 times (JEDEC Level2a)

Criteria:

Products whose drifts between before pretreated and after the reliability tests do not exceed the values below are considered to be in spec.

Sensitivity V_h (T_a=25°C) : Within ±1.5%
Zero-Current Output V_{of} (T_a=25°C) : Within ±25mV
Linearity Error ρ (T_a=25°C) : Within ±0.5%F.S.
EEPROM data : Unchanged

15. Precautions

<Storage Environment>

Products should be stored at an appropriate temperature, and at as low humidity as possible by using desiccator (5 to 35°C). It is recommended to use the products within 4 weeks since packing was opened. Keep products away from chlorine and corrosive gas. When stored in an inappropriate environment, it can affect the product properties.

<Long-term Storage>

Long-term storage may result in poor lead solderability and degraded electrical performance even under proper conditions. For those parts, which stored long-term should be checked as for solderability before it is used.
For storage longer than 1 year, it is recommended to store in nitrogen atmosphere. Oxygen of atmosphere oxidizes leads of products, and lead solderability get worse.

<Other Precautions>

1) This product should not be used under the environment with corrosive gas including chlorine or sulfur.
2) This product is lead (Pb) free. All leads are plated with Sn-Bi. Do not store this product alone in high temperature and high humidity environment. Moreover, this product should be mounted on substrate within six months after delivery.
3) This product is damaged when it is used on the following conditions:
- Supply voltage is applied in the opposite way.
- Overvoltage which is larger than the value indicated in the specification.
4) This product will be damaged if it is used for a long time with the current (effective current) which exceeds the current rating. Careful attention must be paid so that maximum effective current is smaller than current rating.
5) The characteristics can be changed by the influences of nearby current and magnetic field and electric field. Please make sure of the mounting position.

As this product contains gallium arsenide, observe the following procedures for safety.
1) Do not alter the form of this product into a gas, powder, liquid, through burning, crushing, or chemical processing.
2) Observe laws and company regulations when discarding this product.

IMPORTANT NOTICE

0. Asahi Kasei Microdevices Corporation (“AKM”) reserves the right to make changes to the information contained in this document without notice. When you consider any use or application of AKM product stipulated in this document (“Product”), please make inquiries the sales office of AKM or authorized distributors as to current status of the Products.
1. All information included in this document are provided only to illustrate the operation and application examples of AKM Products. AKM neither makes warranties or representations with respect to the accuracy or completeness of the information contained in this document nor grants any license to any intellectual property rights or any other rights of AKM or any third party with respect to the information in this document. You are fully responsible for use of such information contained in this document in your product design or applications. AKM ASSUMES NO LIABILITY FOR ANY LOSSES INCURRED BY YOU OR THIRD PARTIES ARISING FROM THE USE OF SUCH INFORMATION IN YOUR PRODUCT DESIGN OR APPLICATIONS.
2. The Product is neither intended nor warranted for use in equipment or systems that require extraordinarily high levels of quality and/or reliability and/or a malfunction or failure of which may cause loss of human life, bodily injury, serious property damage or serious public impact, including but not limited to, equipment used in nuclear facilities, equipment used in the aerospace industry, medical equipment, equipment used for automobiles, trains, ships and other transportation, traffic signaling equipment, equipment used to control combustions or explosions, safety devices, elevators and escalators, devices related to electric power, and equipment used in finance-related fields. Do not use Product for the above use unless specifically agreed by AKM in writing.
3. Though AKM works continually to improve the Product’s quality and reliability, you are responsible for complying with safety standards and for providing adequate designs and safeguards for your hardware, software and systems which minimize risk and avoid situations in which a malfunction or failure of the Product could cause loss of human life, bodily injury or damage to property, including data loss or corruption.
4. Do not use or otherwise make available the Product or related technology or any information contained in this document for any military purposes, including without limitation, for the design, development, use, stockpiling or manufacturing of nuclear, chemical, or biological weapons or missile technology products (mass destruction weapons). When exporting the Products or related technology or any information contained in this document, you should comply with the applicable export control laws and regulations and follow the procedures required by such laws and regulations. The Products and related technology may not be used for or incorporated into any products or systems whose manufacture, use, or sale is prohibited under any applicable domestic or foreign laws or regulations.
5. Please contact AKM sales representative for details as to environmental matters such as the RoHS compatibility of the Product. Please use the Product in compliance with all applicable laws and regulations that regulate the inclusion or use of controlled substances, including without limitation, the EU RoHS Directive. AKM assumes no liability for damages or losses occurring as a result of noncompliance with applicable laws and regulations.
6. Resale of the Product with provisions different from the statement and/or technical features set forth in this document shall immediately void any warranty granted by AKM for the Product and shall not create or extend in any manner whatsoever, any liability of AKM.
7. This document may not be reproduced or duplicated, in any form, in whole or in part, without prior written consent of AKM.

Rev.1