PRELIMINARY

CYW43340

Single-Chip, Dual-Band (2.4 GHz/5 GHz) IEEE 802.11 a/b/g/n MAC/Baseband/Radio with Integrated Bluetooth 4.0

General Description

The Cypress CYW43340 single–chip quad–radio device provides the highest level of integration for wearables, Internet of Things and gateway applications, with integrated dual band (2.4 GHz / 5 GHz) IEEE 802.11 a/b/g and single–stream IEEE 802.11n MAC/baseband/radio, and Bluetooth 4.0. The CYW43340 includes integrated power amplifiers and LNAs for the 2.4 GHz and 5 GHz WLAN bands, and an integrated 2.4 GHz T/R switch. This greatly reduces the external part count, PCB footprint, and cost of the solution.

Using advanced design techniques and process technology to reduce active and idle power, the CYW43340 is designed to address the needs of mobile devices that require minimal power consumption and compact size. It includes a power management unit which simplifies the system power topology and allows for operation directly from a mobile platform battery while maximizing battery life.

The CYW43340 implements the highly sophisticated Enhanced Collaborative Coexistence algorithms and hardware mechanisms, allowing for an extremely collaborative Bluetooth coexistence scheme along with coexistence support for external radios (such as cellular and LTE, GPS, WiMAX, and Ultra–Wideband) and a single shared 2.4 GHz antenna for Bluetooth and WLAN. As a result, enhanced overall quality for simultaneous voice, video, and data transmission in an IoT or wearable application is achieved.

For the WLAN section, two host interface options are included: an SDIO v2.0 interface and a High-Speed Inter-Chip (HSIC) interface (a USB 2.0 derivative for short-distance on-board connections). An independent, high-speed UART is provided for the Bluetooth host interface.

Cypress Part Numbering Scheme

Cypress is converting the acquired IoT part numbers from Broadcom to the Cypress part numbering scheme. Due to this conversion, there is no change in form, fit, or function as a result of offering the device with Cypress part number marking. The table provides Cypress ordering part number that matches an existing IoT part number.

Table 1. Mapping Table for Part Number between Broadcom and Cypress

Broadcom Part Number	Cypress Part Number
BCM43340	CYW43340
BCM43340XKUBG	CYW43340XKUBG
BCM43340HKUBG	CYW43340HKUBG

Acronyms and Abbreviations

In most cases, acronyms and abbreviations are defined on first use.

For a comprehensive list of acronyms and other terms used in Cypress documents, go to http://www.cypress.com/glossary.

Feautures

IEEE 802.11x Key Features

- Dual–band 2.4 GHz and 5 GHz IEEE 802.11 a/b/g/n
- Single–stream IEEE 802.11n support for 20 MHz and 40 MHz channels provides PHY layer rates up to 150 Mbps for typical upper–layer throughput in excess of 90 Mbps.
- Supports the IEEE 802.11n STBC (space–time block coding) RX and LDPC (low–density parity check) TX options for improved range and power efficiency.
- Supports a single 2.4 GHz antenna shared between WLAN and Bluetooth.
- Shared Bluetooth and 2.4 GHz WLAN receive signal path eliminates the need for an external power splitter while maintaining excellent sensitivity for both Bluetooth and WLAN.
- Internal fractional nPLL allows support for a wide range of reference clock frequencies
- Supports IEEE 802.15.2 external coexistence interface to optimize bandwidth utilization with other co–located wireless technologies such as GPS, WiMAX, or UWB
- Supports standard SDIO v2.0 host interfaces.
- Alternative host interface supports HSIC v1.0 (short–distance USB device)
- Integrated ARM® Cortex–M3™ processor and on–chip memory for complete WLAN subsystem functionality, minimizing the need to wake up the applications processor for standard WLAN functions. This allows for further minimization of power consumption, while maintaining the ability to field upgrade with future features. On–chip memory includes 512 KB SRAM and 640 KB ROM.
- OneDriver™ software architecture for easy migration from existing embedded WLAN and Bluetooth devices as well as future devices.

Bluetooth Key Features

- Complies with Bluetooth Core Specification Version 4.0 with provisions for supporting future specifications.
- Bluetooth Class 1 or Class 2 transmitter operation
- Supports extended Synchronous Connections (eSCO), for enhanced voice quality by allowing for retransmission of dropped packets.
- Adaptive Frequency Hopping (AFH) for reducing radio frequency interference
- Interface support: Host Controller Interface (HCI) using a high-speed UART interface and PCM for audio data
- Low power consumption improves battery life of handheld devices.
- Supports multiple simultaneous Advanced Audio Distribution Profiles (A2DP) for stereo sound.
- Automatic frequency detection for standard crystal and TCXO values

General Features

- Supports battery voltage range from 2.9V to 4.8V supplies with internal switching regulator.
- Programmable dynamic power management
- 3072-bit OTP for storing board parameters
- Routable on low–cost 1x1 PCB stack–ups
- 141-ball WLBGA package(5.67 mm × 4.47 mm, 0.4 mm pitch)
- Security:
  - WPA™ and WPA2™ (Personal) support for powerful encryption and authentication
  - AES in WLAN hardware for faster data encryption and IEEE 802.11i compatibility
  - Reference WLAN subsystem provides Cisco® Compatible Extensions (CCX, CCX 2.0, CCX 3.0, CCX 4.0, CCX 5.0)
  - Reference WLAN subsystem provides Wi–Fi Protected Set-up (WPS)
- Worldwide regulatory support: Global products supported with worldwide homologated design

Figure 1. Functional Block Diagram

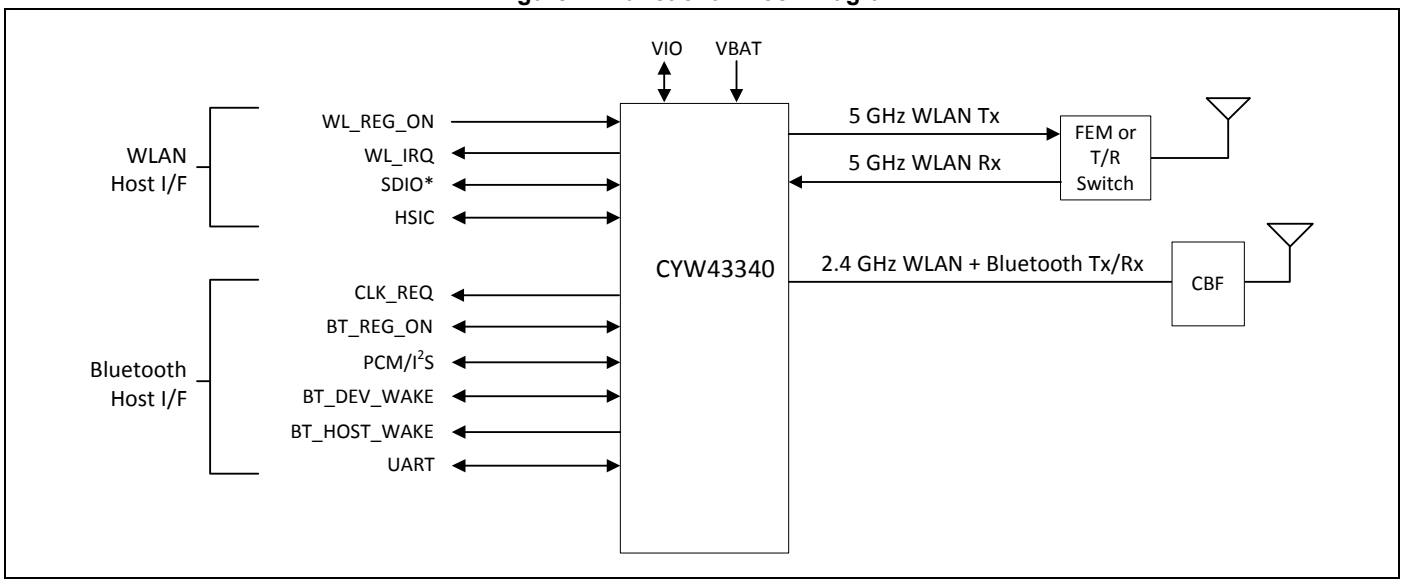

IoT Resources

Cypress provides a wealth of data at http://www.cypress.com/internet-things-iot to help you to select the right IoT device for your design, and quickly and effectively integrate the device into your design. Cypress provides customer access to a wide range of information, including technical documentation, schematic diagrams, product bill of materials, PCB layout information, and software updates. Customers can acquire technical documentation and software from the Cypress Support Community website (http://community.cypress.com/).

Contents

1. Introduction 4
1.1 Overview 4
1.2 Features 5
1.3 Standards Compliance 6
2. Power Supplies and Power Management 7
2.1 Power Supply Topology 7
2.2 WLAN Power Management 9
2.3 PMU Sequencing 9
2.4 Power-Off Shutdown 10
2.5 Power-Up/Power-Down/Reset Circuits 10
3. Frequency References 11
3.1 Crystal Interface and Clock Generation 11
3.2 TCXO 11
3.3 Frequency Selection 13
3.4 External 32.768 kHz Low-Power Oscillator 14
4. Bluetooth Subsystem Overview 15
4.1 Features 15
4.2 Bluetooth Radio 16
5. Bluetooth Baseband Core 17
5.1 Bluetooth 4.0 Features 17
5.2 Link Control Layer 17
5.3 Test Mode Support 17
5.4 Bluetooth Power Management Unit 18
5.5 Adaptive Frequency Hopping 21
5.6 Advanced Bluetooth/WLAN Coexistence 21
5.7 Fast Connection (Interlaced Page and Inquiry Scans) 21
6. Microprocessor and Memory Unit for Bluetooth 22
6.1 RAM, ROM, and Patch Memory 22
6.2 Reset 22
7. Bluetooth Peripheral Transport Unit 23
7.1 PCM Interface 23
7.2 UART Interface 30
7.3 I^2S Interface 31
8. WLAN Global Functions 34
8.1 WLAN CPU and Memory Subsystem 34
8.2 One-Time Programmable Memory 34
8.3 GPIO Interface 34
8.4 External Coexistence Interface 34
8.5 UART Interface 35
8.6 JTAG Interface 35
9. WLAN Host Interfaces 36
9.1 SDIO v2.0 36
9.2 HSIC Interface 38
10. Wireless LAN MAC and PHY 39
10.1 MAC Features 39
10.2 WLAN PHY Description 42
11. WLAN Radio Subsystem 44
11.1 Receiver Path 44
11.2 Transmit Path 44
11.3 Calibration 44
12. Pinout and Signal Descriptions 45
12.1 Signal Assignments 45
12.2 Signal Descriptions 45
12.3 I/O States 54
13. DC Characteristics 57
13.1 Absolute Maximum Ratings 57
13.2 Environmental Ratings 57
13.3 Electrostatic Discharge Specifications 58
13.4 Recommended Operating Conditions and DC Characteristics 58
14. Bluetooth RF Specifications 60
15. WLAN RF Specifications 67
15.1 Introduction 67
15.2 2.4 GHz Band General RF Specifications 68
15.3 WLAN 2.4 GHz Receiver Performance Specifications 68
15.4 WLAN 2.4 GHz Transmitter Performance Specifications 72
15.5 WLAN 5 GHz Receiver Performance Specifications 73
15.6 WLAN 5 GHz Transmitter Performance Specifications 75
15.7 General Spurious Emissions Specifications 76
16. Internal Regulator Electrical Specifications 77
16.1 Core Buck Switching Regulator 77
16.2 3.3V LDO (LDO3P3) 78
16.3 2.5V LDO (LDO2P5) 79
16.4 HSICDVDD LDO 79
16.5 CLDO 80
16.6 LNLDO 81
17. System Power Consumption 82
17.1 WLAN Current Consumption 82
17.2 Bluetooth, and BLE Current Consumption 83
18. Interface Timing and AC Characteristics 84
18.1 SDIO Timing 84
18.2 HSIC Interface Specifications 86
18.3 JTAG Timing 86
19. Power-Up Sequence and Timing 87
19.1 Sequencing of Reset and Regulator Control Signals 87
20. Package Information 90
20.1 Package Thermal Characteristics 90
20.2 Junction Temperature Estimation and PSI_{JT} Versus $THETA_{JC}$ 90
20.3 Environmental Characteristics 90
21. Mechanical Information 91
22. Ordering Information 93
Document History 94
Sales, Solutions, and Legal Information 96

1. Introduction

1.1 Overview

The Cypress CYW43340 single-chip device provides the highest level of integration for wearables, audio and IoT applications, with integrated IEEE 802.1 a/b/g/n MAC/baseband/radio, and Bluetooth 4.0. It provides a small form-factor solution with minimal external components to drive down cost, flexibility in size, form, and function. Comprehensive power management circuitry and software ensure the system can meet the needs of highly mobile devices that require minimal power consumption and reliable operation.

Figure 2 shows the interconnect of all the major physical blocks in the CYW43340 and their associated external interfaces, which are described in greater detail in the following sections.

Figure 2. Block Diagram

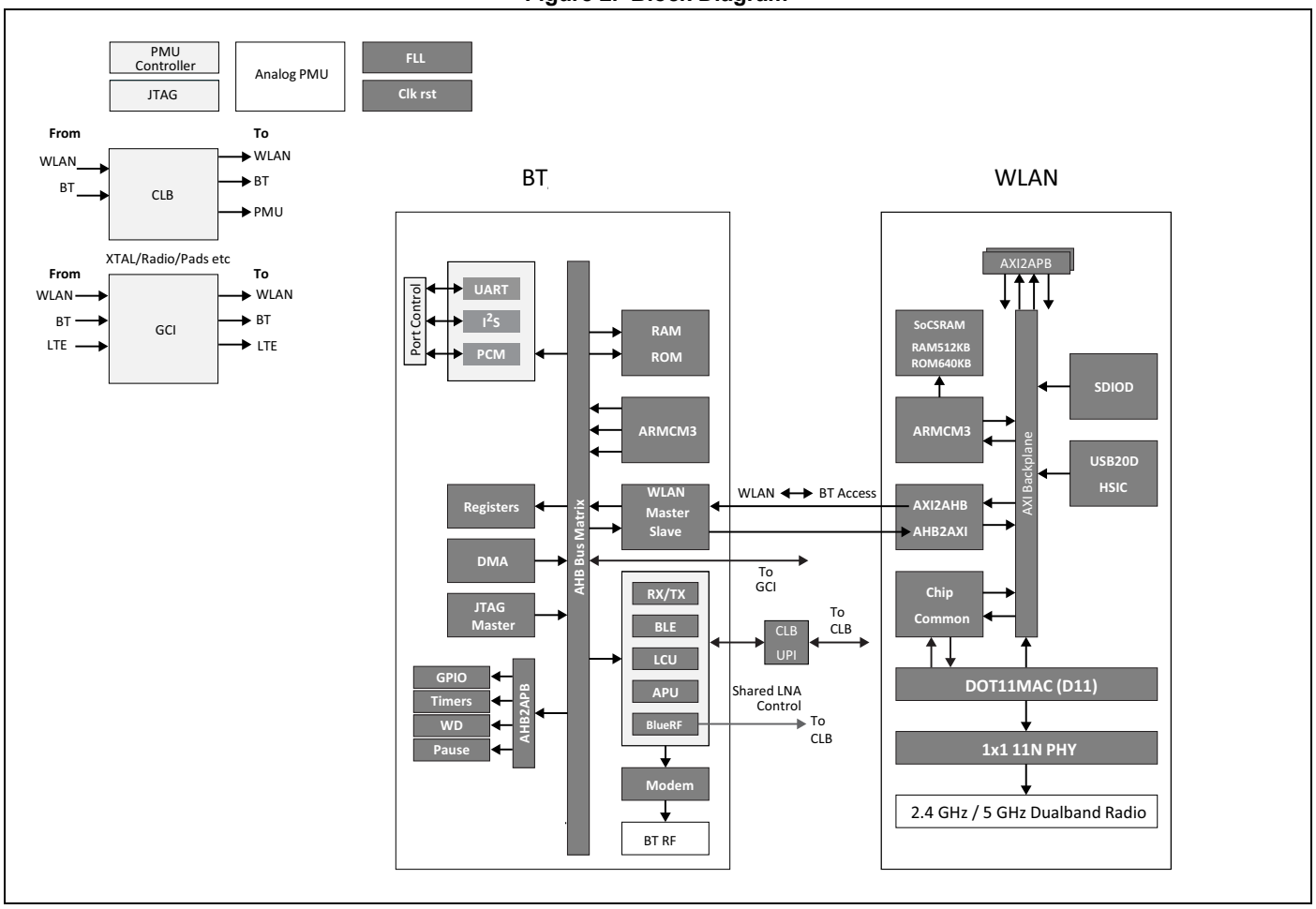

1.2 Features

The CYW43340 supports the following WLAN and Bluetooth features:

- IEEE 802.11a/b/g/n dual-band radio with internal Power Amplifiers, LNAs, and T/R switches
- Bluetooth v4.0 with integrated Class 1 PA
- Concurrent Bluetooth, and WLAN operation
- On-chip WLAN driver execution capable of supporting IEEE 802.11 functionality
- Single- and dual-antenna support
  - Single antenna with shared LNA
  - Simultaneous BT/WLAN receive with single antenna
- WLAN host interface options:
  - SDIO v2.0, including default and high-speed timing.
  - HSIC (USB device interface for short distance on-board applications)
- BT host digital interface (can be used concurrently with above interfaces):
  - UART (up to 4 Mbps)
- ECI—enhanced coexistence support, ability to coordinate BT SCO transmissions around WLAN receives
- I^2S/PCM for BT audio
- HCI high-speed UART (H4, H5) transport support
- Wideband speech support (16 bits linear data, MSB first, left justified at 4K samples/s for transparent air coding, both through I^2S and PCM interface)
- Bluetooth SmartAudio® technology improves voice and music quality to headsets
- Bluetooth low power inquiry and page scan
- Bluetooth Low Energy (BLE) support
- Bluetooth Packet Loss Concealment (PLC)
- Bluetooth Wideband Speech (WBS)
- Audio rate-matching algorithms
- Multiple simultaneous A2DP audio stream

1.3 Standards Compliance

The CYW43340 supports the following standards:

- Bluetooth 4.0 (including Bluetooth Low Energy)
- IEEE 802.11n—Handheld Device Class (Section 11)
- IEEE 802.11a
- IEEE 802.11b
- IEEE 802.11g
- IEEE 802.11d
- IEEE 802.11h
- IEEE 802.11i

The CYW43340 will support the following future drafts/standards:

- IEEE 802.11r—Fast Roaming (between APs)
- IEEE 802.11k—Resource Management
- IEEE 802.11w—Secure Management Frames
- IEEE 802.11 Extensions:
  - IEEE 802.11e QoS Enhancements (as per the WMM® specification is already supported)
  - IEEE 802.11h 5 GHz Extensions
  - IEEE 802.11i MAC Enhancements
  - IEEE 802.11r Fast Roaming Support
  - IEEE 802.11k Radio Resource Measurement

The CYW43340 supports the following security features and proprietary protocols:

- Security:
  - WEP
  - WPA™ Personal
  - WPA2™ Personal
  - WMM
  - WMM-PS (U-APSD)
  - WMM-SA
  - WAPI
  - AES (Hardware Accelerator)
  - TKIP (host-computed)
  - CKIP (SW Support)
- Proprietary Protocols:
  - CCXv2
  - CCXv3
  - CCXv4
  - CCXv5
- IEEE 802.15.2 Coexistence Compliance—on silicon solution compliant with IEEE 3 wire requirements

2. Power Supplies and Power Management

2.1 Power Supply Topology

One Buck regulator, multiple LDO regulators, and a Power Management Unit (PMU) are integrated into the CYW43340. All regulators are programmable via the PMU. These blocks simplify power supply design for Bluetooth, and WLAN in embedded designs.

A single VBAT (2.9–4.8V) and VIO supply (1.8V to 3.3V) can be used, with all additional voltages being provided by the regulators in the CYW43340.

Two control signals, BT_REG_ON and WL_REG_ON, are used to power-up the regulators and take the respective section out of reset. The CBUCK CLDO and LNLDO power up when any of the reset signals are deasserted. All regulators are powered down only when both BT_REG_ON and WL_REG_ON are deasserted. The CLDO and LNLDO may be turned off/on based on the dynamic demands of the digital baseband.

The CYW43340 allows for an extremely low power-consumption mode by completely shutting down the CBUCK, CLDO, and LNDLO regulators. When in this state, LPLDO1 and LPLDO2 (which are low-power linear regulators that are supplied by the system VIO supply) provide the CYW43340 with all the voltages it requires, further reducing leakage currents.

2.1.1 CYW43340 PMU Features

- VBAT to 1.35Vout (372 mA maximum) Core-Buck (CBUCK) switching regulator
- VBAT to 3.3Vout (450 mA maximum) LDO3P3 (external-capacitor)
- VBAT to 2.5Vout (70 mA maximum) LDO2P5 (external-capacitor)
- 1.35V to 1.2Vout (100 mA maximum) LNLDO (external-capacitor)
- 1.35V to 1.2Vout (150 mA maximum) CLDO (external-capacitor)
- 1.35V to 1.2Vout (80 mA maximum) HSICDVDD LDO (external-capacitor)
- Additional internal LDOs (not externally accessible)

Figure 3 on page 8 shows the regulators and a typical power topology.

Figure 3. Typical Power Topology

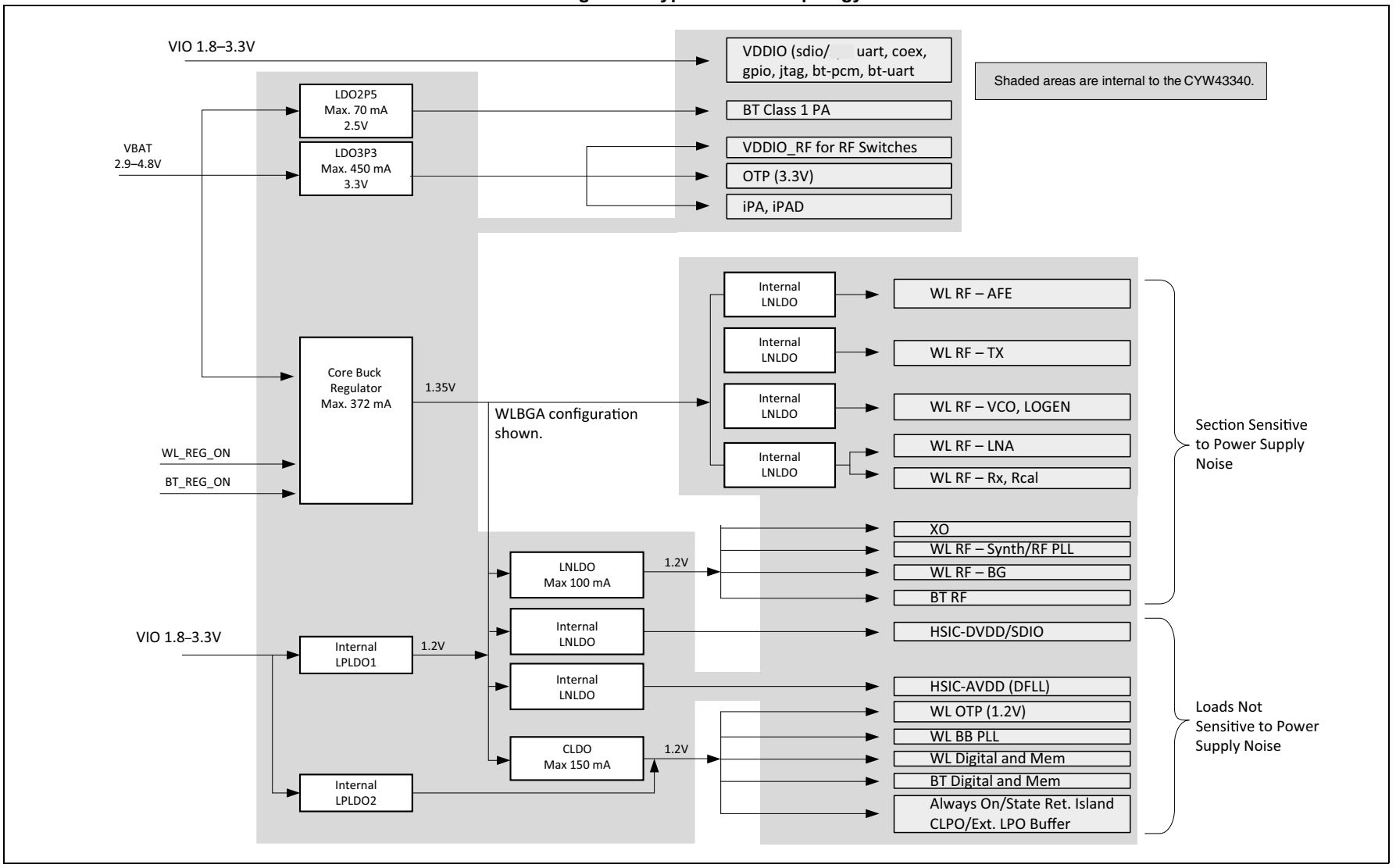

2.2 WLAN Power Management

The CYW43340 has been designed with the stringent power consumption requirements of mobile devices in mind. All areas of the chip design are optimized to minimize power consumption. Silicon processes and cell libraries were chosen to reduce leakage current and supply voltages. Additionally, the CYW43340 integrated RAM is a high Vt memory with dynamic clock control. The dominant supply current consumed by the RAM is leakage current only. Additionally, the CYW43340 includes an advanced WLAN power management unit (PMU) sequencer. The PMU sequencer provides significant power savings by putting the CYW43340 into various power management states appropriate to the current environment and activities that are being performed. The power management unit enables and disables internal regulators, switches, and other blocks based on a computation of the required resources and a table that describes the relationship between resources and the time needed to enable and disable them. Power up sequences are fully programmable. Configurable, free-running counters (running at 32.768 kHz LPO clock) in the PMU sequencer are used to turn on/turn off individual regulators and power switches. Clock speeds are dynamically changed (or gated altogether) for the current mode. Slower clock speeds are used wherever possible.

The CYW43340 WLAN power states are described as follows:

- Active mode—All WLAN blocks in the CYW43340 are powered up and fully functional with active carrier sensing and frame transmission and receiving. All required regulators are enabled and put in the most efficient mode based on the load current. Clock speeds are dynamically adjusted by the PMU sequencer.
- Doze mode—The radio, analog domains, and most of the linear regulators are powered down. The rest of the CYW43340 remains powered up in an IDLE state. All main clocks (PLL, crystal oscillator or TCXO) are shut down to reduce active power to the minimum. The 32.768 kHz LPO clock is available only for the PMU sequencer. This condition is necessary to allow the PMU sequencer to wake up the chip and transition to Active mode. In Doze mode, the primary power consumed is due to leakage current.
- Deep-sleep mode—Most of the chip including both analog and digital domains and most of the regulators are powered off. Logic states in the digital core are saved and preserved into a retention memory in the always-ON domain before the digital core is powered off. Upon a wake-up event triggered by the PMU timers, an external interrupt or a host resume through the HSIC or SDIO bus, logic states in the digital core are restored to their pre-deep-sleep settings to avoid lengthy HW re-initialization.
- Power-down mode—The CYW43340 is effectively powered off by shutting down all internal regulators. The chip is brought out of this mode by external logic re-enabling the internal regulators.

2.3 PMU Sequencing

The PMU sequencer is responsible for minimizing system power consumption. It enables and disables various system resources based on a computation of the required resources and a table that describes the relationship between resources and the time needed to enable and disable them.

Resource requests may come from several sources: clock requests from cores, the minimum resources defined in the Resource Min register, and the resources requested by any active resource request timers. The PMU sequencer maps clock requests into a set of resources required to produce the requested clocks.

Each resource is in one of four states: enabled, disabled, transition_on, and transition_off and has a timer that contains 0 when the resource is enabled or disabled and a non-zero value in the transition states. The timer is loaded with the time_on or time_off value of the resource when the PMU determines that the resource must be enabled or disabled. That timer decrements on each 32.768 kHz PMU clock. When it reaches 0, the state changes from transition_off to disabled or transition_on to enabled. If the time_on value is 0, the resource can go immediately from disabled to enabled. Similarly, a time_off value of 0 indicates that the resource can go immediately from enabled to disabled. The terms enable sequence and disable sequence refer to either the immediate transition or the timer load-decrement sequence.

During each clock cycle, the PMU sequencer performs the following actions:

1. Computes the required resource set based on requests and the resource dependency table.
2. Decrements all timers whose values are non zero. If a timer reaches 0, the PMU clears the ResourcePending bit for the resource and inverts the ResourceState bit.
3. Compares the request with the current resource status and determines which resources must be enabled or disabled.
4. Initiates a disable sequence for each resource that is enabled, no longer being requested, and has no powered up dependents.
5. Initiates an enable sequence for each resource that is disabled, is being requested, and has all of its dependencies enabled.

2.4 Power-Off Shutdown

The CYW43340 provides a low-power shutdown feature that allows the device to be turned off while the host, and any other devices in the system, remain operational. When the CYW43340 is not needed in the system, VDDIO_RF and VDDC are shut down while VDDIO remains powered. This allows the CYW43340 to be effectively off while keeping the I/O pins powered so that they do not draw extra current from any other devices connected to the I/O.

During a low-power shut-down state, provided VDDIO remains applied to the CYW43340, all outputs are tristated, and most inputs signals are disabled. Input voltages must remain within the limits defined for normal operation. This is done to prevent current paths or create loading on any digital signals in the system, and enables the CYW43340 to be fully integrated in an embedded device and take full advantage of the lowest power-savings modes.

Two signals on the CYW43340, the frequency reference input (WRF_XTAL_CAB_OP) and the LPO_IN input, are designed to be high-impedance inputs that do not load down the driving signal even if the chip does not have VDDIO power applied to it.

When the CYW43340 is powered on from this state, it is the same as a normal power-up and the device does not retain any information about its state from before it was powered down.

2.5 Power-Up/Power-Down/Reset Circuits

The CYW43340 has two signals (see Table 2) that enable or disable the Bluetooth and WLAN circuits and the internal regulator blocks, allowing the host to control power consumption. For timing diagrams of these signals and the required power-up sequences, see Section 19.: “Power-Up Sequence and Timing,” on page 87.

Table 2. Power-Up/Power-Down/Reset Control Signals

Signal	Description
WL_REG_ON	This signal is used by the PMU (with BT_REG_ON) to power up the WLAN section. It is also OR-gated with the BT_REG_ON input to control the internal CYW43340 regulators. When this pin is high, the regulators are enabled and the WLAN section is out of reset. When this pin is low, the WLAN section is in reset. If BT_REG_ON and WL_REG_ON are both low, the regulators are disabled. This pin has an internal 200 kΩ pull-down resistor that is enabled by default. It can be disabled through programming.
BT_REG_ON	This signal is used by the PMU (with WL_REG_ON) to decide whether or not to power down the internal CYW43340 regulators. If BT_REG_ON and WL_REG_ON are low, the regulators will be disabled. This pin has an internal 200 kΩ pull-down resistor that is enabled by default. It can be disabled through programming.

3. Frequency References

An external crystal is used for generating all radio frequencies and normal operation clocking. As an alternative, an external frequency reference driven by a temperature-compensated crystal oscillator (TCXO) signal may be used. In addition, a low-power oscillator (LPO) is provided for lower power mode timing.

Note: The crystal and TCXO implementations have different power supplies (WRF_XTAL_VDD1P2 for crystal, WRF_TCXO_VDD for TCXO).

3.1 Crystal Interface and Clock Generation

The CYW43340 can use an external crystal to provide a frequency reference. The recommended configuration for the crystal oscillator including all external components is shown in Figure 4. Consult the reference schematics for the latest configuration.

Figure 4. Recommended Oscillator Configuration

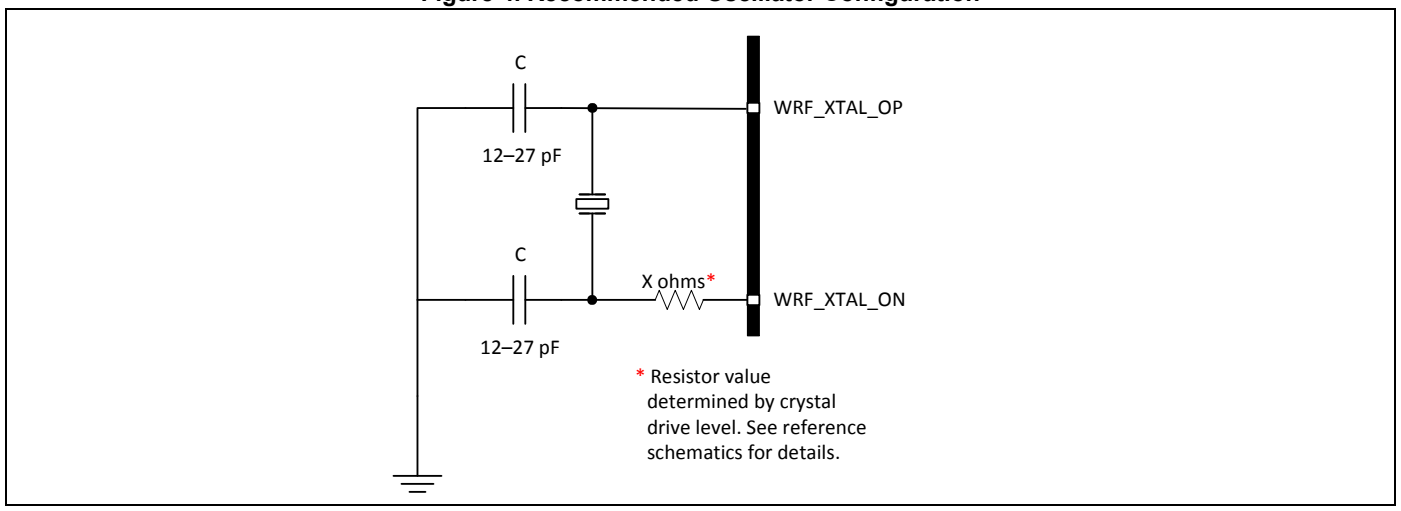

A fractional-N synthesizer in the CYW43340 generates the radio frequencies, clocks, and data/packet timing, enabling it to operate using a wide selection of frequency references.

For SDIO and HSIC applications the default frequency reference is a 37.4 MHz crystal or TCXO. The signal characteristics for the crystal interface are listed in Table 3 on page 12.

Note: Although the fractional-N synthesizer can support alternative reference frequencies, frequencies other than the default require support to be added in the driver, plus additional extensive system testing. Contact Cypress for further details.

3.2 TCXO

As an alternative to a crystal, an external precision TCXO can be used as the frequency reference, provided that it meets the Phase Noise requirements listed in Table 3. When the clock is provided by an external TCXO, there are two possible connection methods, as shown in Figure 5 and Figure 6:

1. If the TCXO is dedicated to driving the CYW43340, it should be connected to the WRF_XTAL_OP pin through an external 1000 pF coupling capacitor, as shown in Figure 5. The internal clock buffer connected to this pin will be turned OFF when the CYW43340 goes into sleep mode. When the clock buffer turns ON and OFF there will be a small impedance variation. If the TCXO is to be shared with another device, such as a GPS receiver, and impedance variation is not allowed, a dedicated external clock buffer will be needed. Power must be supplied to the WRF_XTAL_VDD1P2 pin.
2. For 2.4 GHz operation only, an alternative is to DC-couple the TCXO to the WRF_TCXO_CK pin, as shown in Figure 6. Use this method when the same TCXO is shared with other devices and a change in the input impedance is not acceptable because it may cause a frequency shift that cannot be tolerated by the other device sharing the TCXO. This pin is connected to a clock buffer powered from WRF_TCXO_VDD. If the power supply to this buffer is always on (even in sleep mode), the clock buffer is always on, thereby ensuring a constant input impedance in all states of the device. The maximum current drawn from WRF_TCXO_VDD is approximately 500 µA.

Figure 5. Recommended Circuit to Use with an External Dedicated TCXO

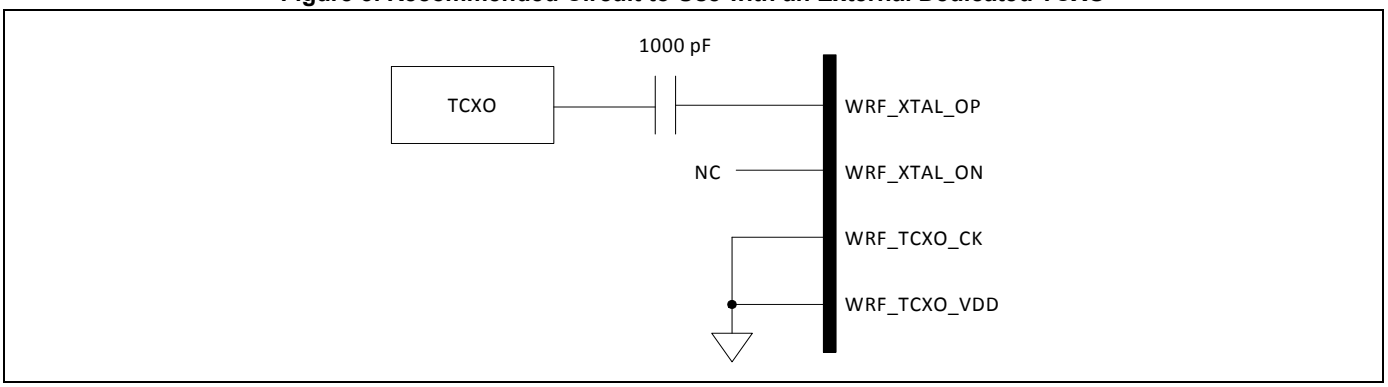

Figure 6. Recommended Circuit to Use with an External Shared TCXO

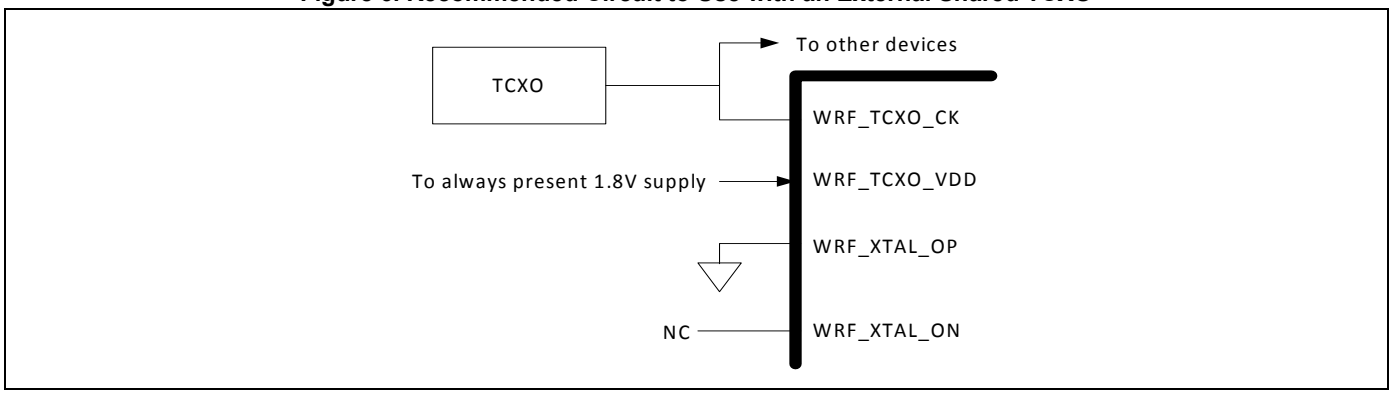

Table 3. Crystal Oscillator and External Clock – Requirements and Performance

Parameter	Conditions/Notes	Crystal[a]			External Frequency Reference[b,c]			
		Min	Typ	Max	Min	Typ	Max	Units
Frequency	–	Between 19.2 MHz and 52 MHz[d,e]						
Crystal load capacitance	–	–	12	–	–	–	–	pF
ESR	–	–	–	60	–	–	–	Ω
Drive level	External crystal requirement	200[f]	–	–	–	–	–	µW
Input impedance (WRF_XTAL_OP)	Resistive	30k	100k	–	30k	100k	–	Ω
	Capacitive	–	–	7.5	–	–	7.5	pF
Input impedance (WRF_TCXO_IN)	Resistive	–	–	–	30k	100k	–	Ω
	Capacitive	–	–	–	–	–	4	pF
WRF_XTAL_OP Input low level	DC-coupled digital signal	–	–	–	0	–	0.2	V
WRF_XTAL_OP Input high level	DC-coupled digital signal	–	–	–	1.0	–	1.26	V
WRF_XTAL_OP input voltage	AC-coupled analog signal (see Figure 5)	–	–	–	400	–	1200	mV_{p-p}
WRF_TCXO_IN Input voltage	DC-coupled analog signal (see Figure 6)	–	–	–	400	–	1980	mV_{p-p}

Table 3. Crystal Oscillator and External Clock – Requirements and Performance (Cont.)

Parameter	Conditions/Notes	Crystal[a]			External Frequency Reference[b,c]			
		Min	Typ	Max	Min	Typ	Max	Units
Frequency tolerance over the lifetime of the equipment, including temperature	Without trimming	–20	–	20	–20	–	20	ppm
Duty cycle	37.4 MHz clock	–	–	–	40	50	60	%
Phase Noise (802.11b/g)	37.4 MHz clock at 10 kHz offset	–	–	–	–	–	–131	dBc/Hz
	37.4 MHz clock at 100 kHz or greater offset	–	–	–	–	–	–138	dBc/Hz
Phase Noise (802.11a)	37.4 MHz clock at 10 kHz offset	–	–	–	–	–	–139	dBc/Hz
	37.4 MHz clock at 100 kHz or greater offset	–	–	–	–	–	–146	dBc/Hz
Phase Noise (802.11n, 2.4 GHz)	37.4 MHz clock at 10 kHz offset	–	–	–	–	–	–136	dBc/Hz
	37.4 MHz clock at 100 kHz or greater offset	–	–	–	–	–	–143	dBc/Hz
Phase Noise (802.11n, 5 GHz)	37.4 MHz clock at 10 kHz offset	–	–	–	–	–	–144	dBc/Hz
	37.4 MHz clock at 100 kHz or greater offset	–	–	–	–	–	–151	dBc/Hz

a. (Crystal) Use WRF_XTAL_OP and WRF_XTAL_ON, internal power to pin WRF_XTAL_VDD1P2.

b. (TCXO) See "TCXO" on page 11 for alternative connection methods.

c. For a clock reference other than 37.4 MHz, 20 × log10(f/ 37.4) dB should be added to the limits, where f = the reference clock frequency in MHz.

d. BT_TM6 should be tied low for a 52 MHz clock reference. For other frequencies, BT_TM6 should be tied high. Note that 52 MHz is not an auto-detected frequency using the LPO clock.

e. The frequency step size is approximately 80 Hz resolution.

f. The crystal should be capable of handling a 200uW drive level from the CYW43340.

3.3 Frequency Selection

Any frequency within the ranges specified for the crystal and TCXO reference may be used. These include not only the standard handset reference frequencies of 19.2, 19.44, 19.68, 19.8, 20, 26, 37.4, and 52 MHz, but also other frequencies in this range, with approximately 80 Hz resolution. The CYW43340 must have the reference frequency set correctly in order for any of the UART or PCM interfaces to function correctly, since all bit timing is derived from the reference frequency.

Note: The fractional-N synthesizer can support many reference frequencies. However, frequencies other than the default require support to be added in the driver plus additional, extensive system testing. Contact Cypress for further details.

The reference frequency for the CYW43340 may be set in the following ways:

- Set the *xtalfreq=xxxxx* parameter in the nvram.txt file (used to load the driver) to correctly match the crystal frequency.
- Auto-detect any of the standard handset reference frequencies using an external LPO clock.

For applications such as handsets and portable smart communication devices, where the reference frequency is one of the standard frequencies commonly used, the CYW43340 automatically detects the reference frequency and programs itself to the correct reference frequency. In order for auto frequency detection to work correctly, the CYW43340 must have a valid and stable 32.768 kHz LPO clock that meets the requirements listed in Table 4 on page 14 and is present during power-on reset.

3.4 External 32.768 kHz Low-Power Oscillator

The CYW43340 uses a secondary low frequency clock for low-power-mode timing. Either the internal low-precision LPO or an external 32.768 kHz precision oscillator is required. The internal LPO frequency range is approximately 33 kHz ± 30% over process, voltage, and temperature, which is adequate for some applications. However, a trade-off caused by this wide LPO tolerance is a small current consumption increase during WLAN power save mode that is incurred by the need to wake up earlier to avoid missing beacons. Whenever possible, the preferred approach for WLAN is to use a precision external 32.768 kHz clock that meets the requirements listed in Table 4.

Note: BT operations require the use of an external LPO that meets the requirements listed in Table 4.

Table 4. External 32.768 kHz Sleep Clock Specifications

Parameter	LPO Clock	Units
Nominal input frequency	32.768	kHz
Frequency accuracy	±200	ppm
Duty cycle	30–70	%
Input signal amplitude	200–1800	mV, p-p
Signal type	Square-wave or sine-wave	–
Input impedance[a]	>100k <5	Ω pF
Clock jitter (during initial start-up)	<10,000	ppm

a.When power is applied or switched off.

4. Bluetooth Subsystem Overview

The Cypress CYW43340 is a Bluetooth 4.0-compliant, baseband processor/2.4 GHz transceiver.

The CYW43340 is the optimal solution for any Bluetooth voice and/or data application. The Bluetooth subsystem presents a standard Host Controller Interface (HCI) via a high speed UART and PCM for audio. The CYW43340 incorporates all Bluetooth 4.0 features including BR/EDR and LE.

The CYW43340 Bluetooth radio transceiver provides enhanced radio performance to meet the most stringent mobile phone temperature applications and the tightest integration into mobile handsets and portable devices. It is fully compatible with any of the standard TCXO frequencies and provides full radio compatibility to operate simultaneously with GPS, WLAN, and cellular radios.

The Bluetooth transmitter also features a Class 1 power amplifier with Class 2 capability.

4.1 Features

Major Bluetooth features of the CYW43340 include:

- Supports key features of upcoming Bluetooth standards
- Fully supports Bluetooth Core Specification version 4.0 features
- UART baud rates up to 4 Mbps
- Supports all Bluetooth 4.0 packet types
- Supports maximum Bluetooth data rates over HCI UART
- Multipoint operation with up to seven active slaves
  - Maximum of seven simultaneous active ACL links
  - Maximum of three simultaneous active SCO and eSCO connections with scatternet support
- Trigger Broadcom fast connect (TBFC)
- Narrowband and wideband packet loss concealment
- Scatternet operation with up to four active piconets with background scan and support for scatter mode
- High-speed HCI UART transport support with low-power out-of-band BT_DEV_WAKE and BT_HOST_WAKE signaling (see “Host Controller Power Management” on page 18)
- Channel quality driven data rate and packet type selection
- Standard Bluetooth test modes
- Extended radio and production test mode features
- Full support for power savings modes
  - Bluetooth clock request
  - Bluetooth standard sniff
  - Deep-sleep modes and software regulator shutdown
- TCXO input and auto-detection of all standard handset clock frequencies. Also supports a low-power crystal, which can be used during power save mode for better timing accuracy.

4.2 Bluetooth Radio

The CYW43340 has an integrated radio transceiver that has been optimized for use in 2.4 GHz Bluetooth wireless systems. It has been designed to provide low-power, low-cost, robust communications for applications operating in the globally available 2.4 GHz unlicensed ISM band. It is fully compliant with the Bluetooth Radio Specification and EDR specification and meets or exceeds the requirements to provide the highest communication link quality of service.

4.2.1 Transmit

The CYW43340 features a fully integrated zero-IF transmitter. The baseband transmit data is GFSK-modulated in the modem block and upconverted to the 2.4 GHz ISM band in the transmitter path. The transmitter path consists of signal filtering, I/Q upconversion, output power amplifier, and RF filtering. The transmitter path also incorporates π/4–DQPSK for 2 Mbps and 8–DPSK for 3 Mbps to support EDR. The transmitter section is compatible to the Bluetooth Low Energy specification. The transmitter PA bias can also be adjusted to provide Bluetooth class 1 or class 2 operation.

4.2.2 Digital Modulator

The digital modulator performs the data modulation and filtering required for the GFSK, π/4–DQPSK, and 8–DPSK signal. The fully digital modulator minimizes any frequency drift or anomalies in the modulation characteristics of the transmitted signal and is much more stable than direct VCO modulation schemes.

4.2.3 Digital Demodulator and Bit Synchronizer

The digital demodulator and bit synchronizer take the low-IF received signal and perform an optimal frequency tracking and bit-synchronization algorithm.

4.2.4 Power Amplifier

The fully integrated PA supports Class 1 or Class 2 output using a highly linearized, temperature-compensated design. This provides greater flexibility in front-end matching and filtering. Due to the linear nature of the PA combined with some integrated filtering, external filtering is required to meet the Bluetooth and regulatory harmonic and spurious requirements. For integrated mobile handset applications in which Bluetooth is integrated next to the cellular radio, external filtering can be applied to achieve near thermal noise levels for spurious and radiated noise emissions. The transmitter features a sophisticated on-chip transmit signal strength indicator (TSSI) block to keep the absolute output power variation within a tight range across process, voltage, and temperature.

4.2.5 Receiver

The receiver path uses a low-IF scheme to downconvert the received signal for demodulation in the digital demodulator and bit synchronizer. The receiver path provides a high degree of linearity, an extended dynamic range, and high-order on-chip channel filtering to ensure reliable operation in the noisy 2.4 GHz ISM band. The front-end topology with built-in out-of-band attenuation enables the CYW43340 to be used in most applications with minimal off-chip filtering. For integrated handset operation, in which the Bluetooth function is integrated close to the cellular transmitter, external filtering is required to eliminate the desensitization of the receiver by the cellular transmit signal.

4.2.6 Digital Demodulator and Bit Synchronizer

The digital demodulator and bit synchronizer take the low-IF received signal and perform an optimal frequency tracking and bit synchronization algorithm.

4.2.7 Receiver Signal Strength Indicator

The radio portion of the CYW43340 provides a Receiver Signal Strength Indicator (RSSI) signal to the baseband, so that the controller can take part in a Bluetooth power-controlled link by providing a metric of its own receiver signal strength to determine whether the transmitter should increase or decrease its output power.

4.2.8 Local Oscillator Generation

Local Oscillator (LO) generation provides fast frequency hopping (1600 hops/second) across the 79 maximum available channels. The LO generation subblock employs an architecture for high immunity to LO pulling during PA operation. The CYW43340 uses an internal RF and IF loop filter.

4.2.9 Calibration

The CYW43340 radio transceiver features an automated calibration scheme that is fully self contained in the radio. No user interaction is required during normal operation or during manufacturing to provide the optimal performance. Calibration optimizes the performance of all the major blocks within the radio to within 2% of optimal conditions, including gain and phase characteristics of filters, matching between key components, and key gain blocks. This takes into account process variation and temperature variation. Calibration occurs transparently during normal operation during the settling time of the hops and calibrates for temperature variations as the device cools and heats during normal operation in its environment.

5. Bluetooth Baseband Core

The Bluetooth Baseband Core (BBC) implements all of the time critical functions required for high-performance Bluetooth operation. The BBC manages the buffering, segmentation, and routing of data for all connections. It also buffers data that passes through it, handles data flow control, schedules SCO/ACL TX/RX transactions, monitors Bluetooth slot usage, optimally segments and packages data into baseband packets, manages connection status indicators, and composes and decodes HCI packets. In addition to these functions, it independently handles HCI event types, and HCI command types.

The following transmit and receive functions are also implemented in the BBC hardware to increase reliability and security of the TX/RX data before sending over the air:

- Symbol timing recovery, data deframing, forward error correction (FEC), header error control (HEC), cyclic redundancy check (CRC), data decryption, and data dewhitening in the receiver.
- Data framing, FEC generation, HEC generation, CRC generation, key generation, data encryption, and data whitening in the transmitter.

5.1 Bluetooth 4.0 Features

The BBC supports all Bluetooth 4.0 features, with the following benefits:

- Dual-mode classic Bluetooth and classic Low Energy (BT and BLE) operation.
- Low Energy Physical Layer
- Low Energy Link Layer
- Enhancements to HCI for Low Energy
- Low Energy Direct Test mode
- AES encryption

Note: The CYW43340 is compatible with the Bluetooth Low Energy operating mode, which provides a dramatic reduction in the power consumption of the Bluetooth radio and baseband. The primary application for this mode is to provide support for low data rate devices, such as sensors and remote controls.

5.2 Link Control Layer

The link control layer is part of the Bluetooth link control functions that are implemented in dedicated logic in the link control unit (LCU). This layer consists of the command controller that takes commands from the software, and other controllers that are activated or configured by the command controller, to perform the link control tasks. Each task performs a different state in the Bluetooth Link Controller.

- Major states:
  - Standby
  - Connection
- Substates:
  - Page
  - Page Scan
  - Inquiry
  - Inquiry Scan
  - Sniff
  - BLE Adv
  - BLE Scan/Initiation

5.3 Test Mode Support

The CYW43340 fully supports Bluetooth Test mode as described in Part I:1 of the *Specification of the Bluetooth System Version 3.0*. This includes the transmitter tests, normal and delayed loopback tests, and reduced hopping sequence.

In addition to the standard Bluetooth Test Mode, the CYW43340 also supports enhanced testing features to simplify RF debugging and qualification and type-approval testing. These features include:

- Fixed frequency carrier wave (unmodulated) transmission
  - Simplifies some type-approval measurements (Japan)
  - Aids in transmitter performance analysis

- Fixed frequency constant receiver mode
  - Receiver output directed to I/O pin
  - Allows for direct BER measurements using standard RF test equipment
  - Facilitates spurious emissions testing for receive mode
- Fixed frequency constant transmission
  - Eight-bit fixed pattern or PRBS-9
  - Enables modulated signal measurements with standard RF test equipment

5.4 Bluetooth Power Management Unit

The Bluetooth Power Management Unit (PMU) provides power management features that can be invoked by either software through power management registers or packet handling in the baseband core. The power management functions provided by the CYW43340 are:

- RF Power Management
- Host Controller Power Management
- BBC Power Management

5.4.1 RF Power Management

The BBC generates power-down control signals for the transmit path, receive path, PLL, and power amplifier to the 2.4 GHz transceiver. The transceiver then processes the power-down functions accordingly.

5.4.2 Host Controller Power Management

When running in UART mode, the CYW43340 may be configured so that dedicated signals are used for power management handshaking between the CYW43340 and the host. The basic power saving functions supported by those hand-shaking signals include the standard Bluetooth defined power savings modes and standby modes of operation.

Table 5 describes the power-control hand-shake signals used with the UART interface.

Table 5. Power Control Pin Description

Signal	Type	Description
BT_DEV_WAKE	I	Bluetooth device wake-up: Signal from the host to the CYW43340 indicating that the host requires attention. ■ Asserted: The Bluetooth device must wake-up or remain awake. ■ Deasserted: The Bluetooth device may sleep when sleep criteria are met. The polarity of this signal is software configurable and can be asserted high or low.
BT_HOST_WAKE	O	Host wake up. Signal from the CYW43340 to the host indicating that the CYW43340 requires attention. ■ Asserted: host device must wake-up or remain awake. ■ Deasserted: host device may sleep when sleep criteria are met. The polarity of this signal is software configurable and can be asserted high or low.
CLK_REQ	O	The CYW43340 asserts CLK_REQ when Bluetooth, or WLAN directs the host to turn on the reference clock. The CLK_REQ polarity is active-high. Add an external 100 kΩ pull-down resistor to ensure the signal is deasserted when the CYW43340 powers up or resets when VDDIO is present.
Note: Pad function Control Register is set to 0 for these pins.		

Figure 7. Startup Signaling Sequence

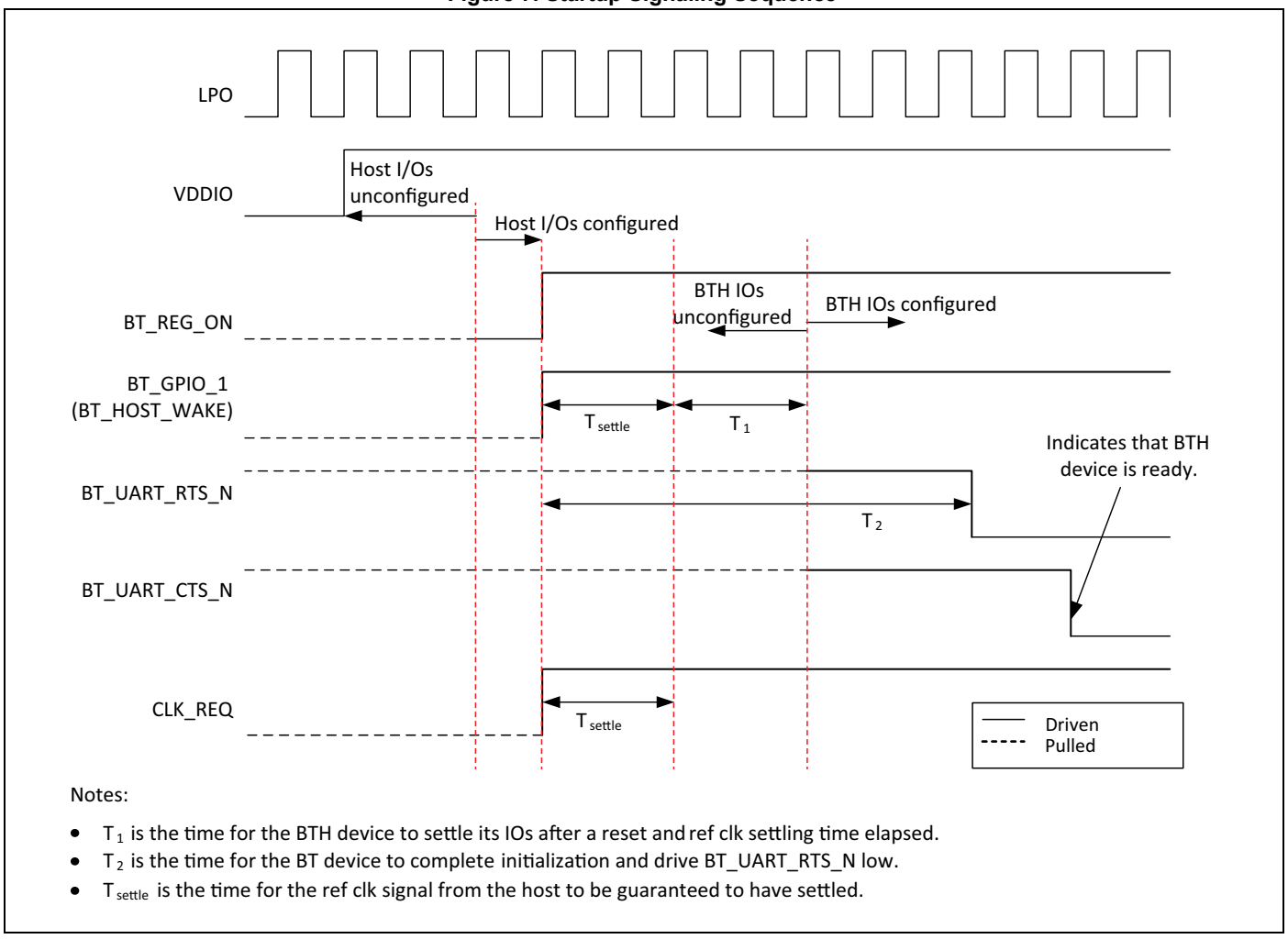

Notes:

- T_1 is the time for the BTH device to settle its IOs after a reset and ref clk settling time elapsed.
- T_2 is the time for the BT device to complete initialization and drive BT_UART_RTS_N low.
- T_{settle} is the time for the ref clk signal from the host to be guaranteed to have settled.

5.4.3 BBC Power Management

The following are low-power operations for the BBC:

- Physical layer packet-handling turns the RF on and off dynamically within transmit/receive packets.
- Bluetooth-specified low-power connection modes: sniff, hold, and park. While in these modes, the CYW43340 runs on the low-power oscillator and wakes up after a predefined time period.
- A low-power shutdown feature allows the device to be turned off while the host and any other devices in the system remain operational. When the CYW43340 is not needed in the system, the RF and core supplies are shut down while the I/O remains powered. This allows the CYW43340 to effectively be off while keeping the I/O pins powered so they do not draw extra current from any other devices connected to the I/O.

During the low-power shut-down state, provided VDDIO remains applied to the CYW43340, all outputs are tristated, and most input signals are disabled. Input voltages must remain within the limits defined for normal operation. This is done to prevent current paths or create loading on any digital signals in the system and enables the CYW43340 to be fully integrated in an embedded device to take full advantage of the lowest power-saving modes.

Two CYW43340 input signals are designed to be high-impedance inputs that do not load the driving signal even if the chip does not have VDDIO power supplied to it: the frequency reference input (WRF_TCXO_IN) and the 32.768 kHz input (LPO). When the CYW43340 is powered on from this state, it is the same as a normal power-up, and the device does not contain any information about its state from the time before it was powered down.

5.4.4 Wideband Speech

The CYW43340 provides support for wideband speech (WBS) using on-chip Smart Audio technology. The CYW43340 can perform subband-codec (SBC), as well as mSBC, encoding and decoding of linear 16 bits at 16 kHz (256 Kbps rate) transferred over the PCM bus.

5.4.5 Packet Loss Concealment

Packet Loss Concealment (PLC) improves apparent audio quality for systems with marginal link performance. Bluetooth messages are sent in packets. When a packet is lost, it creates a gap in the received audio bit-stream. Packet loss can be mitigated in several ways:

- Fill in zeros.
- Ramp down the output audio signal toward zero (this is the method used in current Bluetooth headsets).
- Repeat the last frame (or packet) of the received bit-stream and decode it as usual (frame repeat).

These techniques cause distortion and popping in the audio stream. The CYW43340 uses a proprietary waveform extension algorithm to provide dramatic improvement in the audio quality. Figure 8 and Figure 9 show audio waveforms with and without Packet Loss Concealment. Cypress PLC/BEC algorithms also support wideband speech.

Figure 8. CVSD Decoder Output Waveform Without PLC

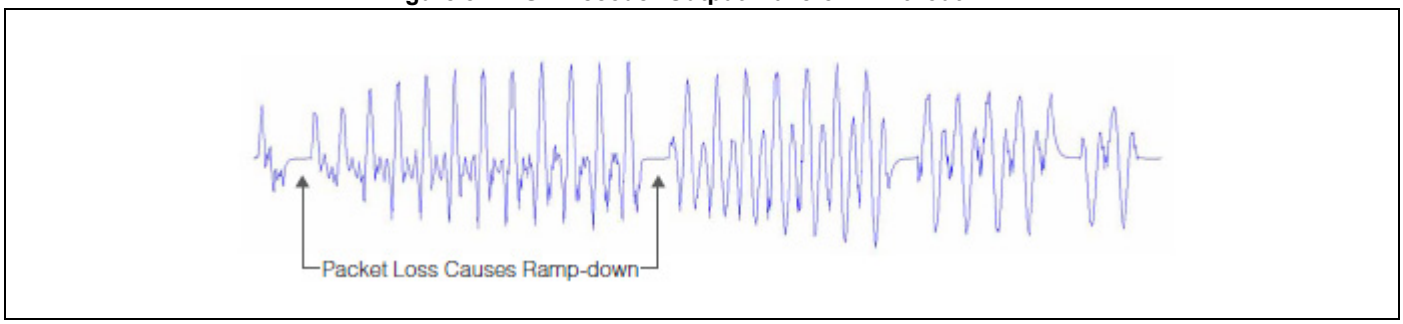

Figure 9. CVSD Decoder Output Waveform After Applying PLC

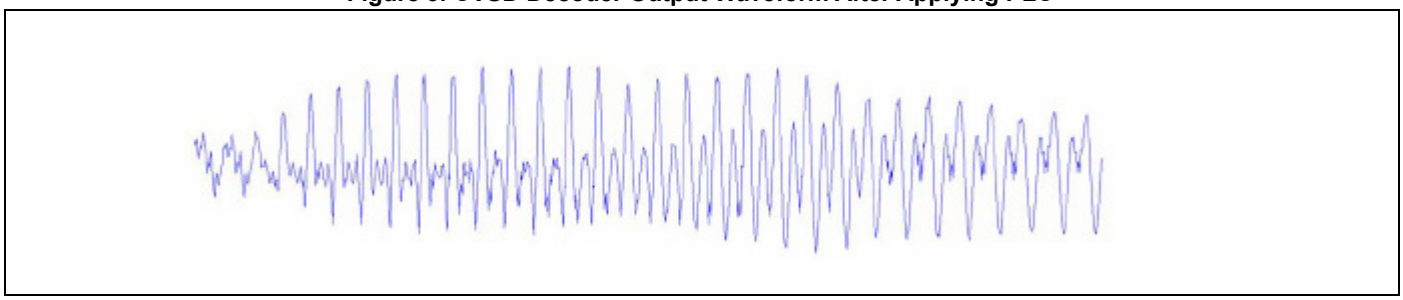

5.4.6 Audio Rate-Matching Algorithms

The CYW43340 has an enhanced rate-matching algorithm that uses interpolation algorithms to reduce audio stream jitter that may be present when the rate of audio data coming from the host is not the same as the Bluetooth audio data rates.

5.4.7 Codec Encoding

The CYW43340 can support SBC and mSBC encoding and decoding for wideband speech.

5.4.8 Multiple Simultaneous A2DP Audio Stream

The CYW43340 has the ability to take a single audio stream and output it to multiple Bluetooth devices simultaneously. This allows a user to share his or her music (or any audio stream) with a friend.

5.4.9 Burst Buffer Operation

The CYW43340 has a data buffer that can buffer data being sent over the HCI and audio transports, then send the data at an increased rate. This mode of operation allows the host to sleep for the maximum amount of time, dramatically reducing system current consumption.

5.5 Adaptive Frequency Hopping

The CYW43340 gathers link quality statistics on a channel by channel basis to facilitate channel assessment and channel map selection. The link quality is determined using both RF and baseband signal processing to provide a more accurate frequency-hop map.

5.6 Advanced Bluetooth/WLAN Coexistence

The CYW43340 includes advanced coexistence technologies that are only possible with a Bluetooth/WLAN integrated die solution. These coexistence technologies are targeted at small form-factor platforms, such as cell phones and media players, including applications such as VoWLAN + SCO and Video-over-WLAN + High Fidelity BT Stereo.

Support is provided for platforms that share a single antenna between Bluetooth and WLAN. Dual-antenna applications are also supported. The CYW43340 radio architecture allows for lossless simultaneous Bluetooth and WLAN reception for shared antenna applications. This is possible only via an integrated solution (shared LNA and joint AGC algorithm). It has superior performance versus implementations that need to arbitrate between Bluetooth and WLAN reception.

The CYW43340 integrated solution enables MAC-layer signaling (firmware) and a greater degree of sharing via an enhanced coexistence interface. Information is exchanged between the Bluetooth and WLAN cores without host processor involvement.

The CYW43340 also supports Transmit Power Control on the STA together with standard Bluetooth TPC to limit mutual interference and receiver desensitization. Preemption mechanisms are utilized to prevent AP transmissions from colliding with Bluetooth frames. Improved channel classification techniques have been implemented in Bluetooth for faster and more accurate detection and elimination of interferers (including non-WLAN 2.4 GHz interference).

The Bluetooth AFH classification is also enhanced by the WLAN core's channel information.

5.7 Fast Connection (Interlaced Page and Inquiry Scans)

The CYW43340 supports page scan and inquiry scan modes that significantly reduce the average inquiry response and connection times. These scanning modes are compatible with the Bluetooth version 2.1 page and inquiry procedures.

6. Microprocessor and Memory Unit for Bluetooth

The Bluetooth microprocessor core is based on the ARM® Cortex™-M3 32-bit RISC processor with embedded ICE-RT debug and JTAG interface units. It runs software from the link control (LC) layer, up to the host controller interface (HCI).

The ARM core is paired with a memory unit that contains 652 KB of ROM memory for program storage and boot ROM, 195 KB of RAM for data scratchpad and patch RAM code. The internal ROM allows for flexibility during power-on reset to enable the same device to be used in various configurations. At power-up, the lower-layer protocol stack is executed from the internal ROM memory.

External patches may be applied to the ROM-based firmware to provide flexibility for bug fixes or features additions. These patches may be downloaded from the host to the CYW43340 through the UART transports. The mechanism for downloading via UART is identical to the proven interface of the CYW4329 and CYW4330 devices.

6.1 RAM, ROM, and Patch Memory

The CYW43340 Bluetooth core has 195 KB of internal RAM which is mapped between general purpose scratch pad memory and patch memory and 652 KB of ROM used for the lower-layer protocol stack, test mode software, and boot ROM. The patch memory capability enables the addition of code changes for purposes of feature additions and bug fixes to the ROM memory.

6.2 Reset

The CYW43340 has an integrated power-on reset circuit that resets all circuits to a known power-on state. The BT power-on reset (POR) circuit is out of reset after BT_REG_ON goes High. If BT_REG_ON is low, then the POR circuit is held in reset.

7. Bluetooth Peripheral Transport Unit

7.1 PCM Interface

The CYW43340 supports two independent PCM interfaces that share the pins with the I^2S interfaces. The PCM Interface on the CYW43340 can connect to linear PCM Codec devices in master or slave mode. In master mode, the CYW43340 generates the PCM_CLK and PCM_SYNC signals, and in slave mode, these signals are provided by another master on the PCM interface and are inputs to the CYW43340. The configuration of the PCM interface may be adjusted by the host through the use of vendor-specific HCI commands.

7.1.1 Slot Mapping

The CYW43340 supports up to three simultaneous full-duplex SCO or eSCO channels through the PCM interface. These three channels are time-multiplexed onto the single PCM interface by using a time-slotting scheme where the 8 kHz or 16 kHz audio sample interval is divided into as many as 16 slots. The number of slots is dependent on the selected interface rate of 128 kHz, 512 kHz, or 1024 kHz. The corresponding number of slots for these interface rate is 1, 2, 4, 8, and 16, respectively. Transmit and receive PCM data from an SCO channel is always mapped to the same slot. The PCM data output driver tristates its output on unused slots to allow other devices to share the same PCM interface signals. The data output driver tristates its output after the falling edge of the PCM clock during the last bit of the slot.

7.1.2 Frame Synchronization

The CYW43340 supports both short- and long-frame synchronization in both master and slave modes. In short-frame synchronization mode, the frame synchronization signal is an active-high pulse at the audio frame rate that is a single-bit period in width and is synchronized to the rising edge of the bit clock. The PCM slave looks for a high on the falling edge of the bit clock and expects the first bit of the first slot to start at the next rising edge of the clock. In long-frame synchronization mode, the frame synchronization signal is again an active-high pulse at the audio frame rate; however, the duration is three bit periods and the pulse starts coincident with the first bit of the first slot.

7.1.3 Data Formatting

The CYW43340 may be configured to generate and accept several different data formats. For conventional narrowband speech mode, the CYW43340 uses 13 of the 16 bits in each PCM frame. The location and order of these 13 bits can be configured to support various data formats on the PCM interface. The remaining three bits are ignored on the input and may be filled with 0s, 1s, a sign bit, or a programmed value on the output. The default format is 13-bit 2's complement data, left justified, and clocked MSB first.

7.1.4 Wideband Speech Support

When the host encodes Wideband Speech (WBS) packets in transparent mode, the encoded packets are transferred over the PCM bus for an eSCO voice connection. In this mode, the PCM bus is typically configured in master mode for a 4 kHz sync rate with 16-bit samples, resulting in a 64 kbps bit rate. The CYW43340 also supports slave transparent mode using a proprietary rate-matching scheme. In SBC-code mode, linear 16-bit data at 16 kHz (256 kbps rate) is transferred over the PCM bus.

7.1.5 Burst PCM Mode

In this mode of operation, the PCM bus runs at a significantly higher rate of operation to allow the host to duty cycle its operation and save current. In this mode of operation, the PCM bus can operate at a rate of up to 24 MHz. This mode of operation is initiated with an HCI command from the host.

7.1.6 PCM Interface Timing

Short Frame Sync, Master Mode

Figure 10. PCM Timing Diagram (Short Frame Sync, Master Mode)

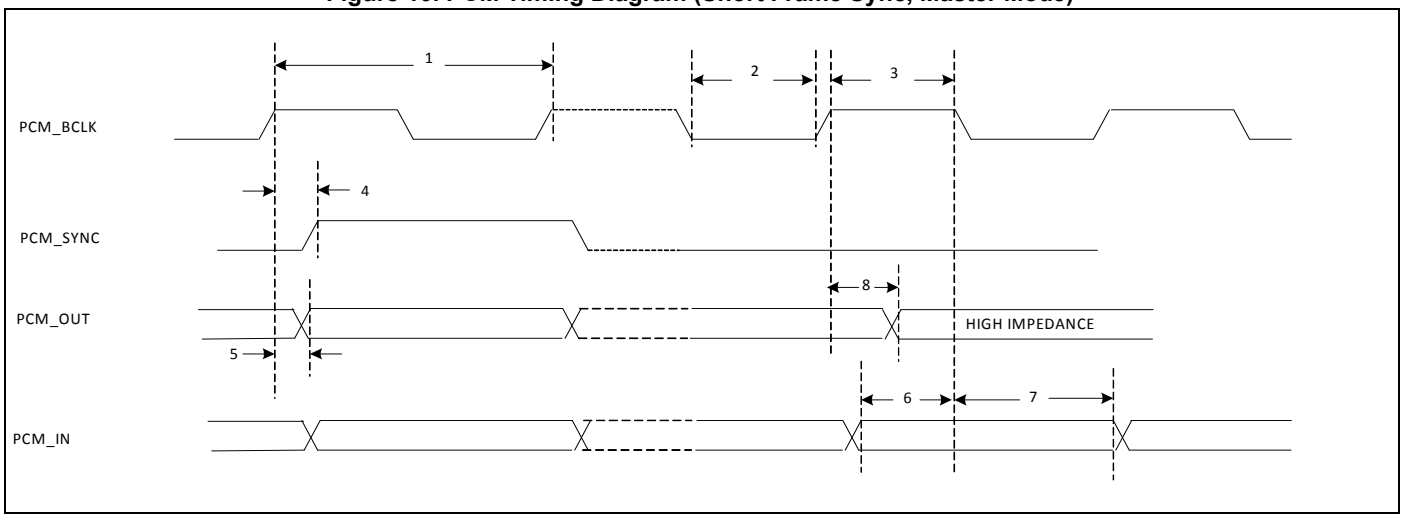

Table 6. PCM Interface Timing Specifications (Short Frame Sync, Master Mode)

Ref No.	Characteristics	Minimum	Typical	Maximum	Unit
1	PCM bit clock frequency	–	–	12	MHz
2	PCM bit clock low	41	–	–	ns
3	PCM bit clock high	41	–	–	ns
4	PCM_SYNC delay	0	–	25	ns
5	PCM_OUT delay	0	–	25	ns
6	PCM_IN setup	8	–	–	ns
7	PCM_IN hold	8	–	–	ns
8	Delay from rising edge of PCM_BCLK during last bit period to PCM_OUT becoming high impedance	0	–	25	ns

Short Frame Sync, Slave Mode

Figure 11. PCM Timing Diagram (Short Frame Sync, Slave Mode)

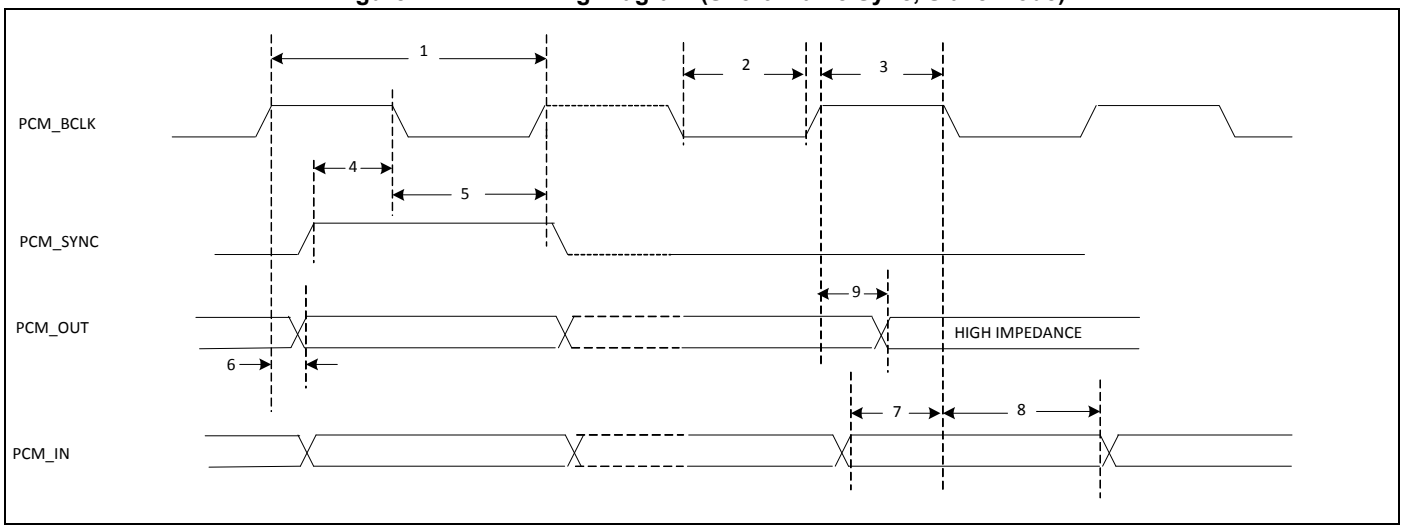

Table 7. PCM Interface Timing Specifications (Short Frame Sync, Slave Mode)

Ref No.	Characteristics	Minimum	Typical	Maximum	Unit
1	PCM bit clock frequency	–	–	12	MHz
2	PCM bit clock low	41	–	–	ns
3	PCM bit clock high	41	–	–	ns
4	PCM_SYNC setup	8	–	–	ns
5	PCM_SYNC hold	8	–	–	ns
6	PCM_OUT delay	0	–	25	ns
7	PCM_IN setup	8	–	–	ns
8	PCM_IN hold	8	–	–	ns
9	Delay from rising edge of PCM_BCLK during last bit period to PCM_OUT becoming high impedance	0	–	25	ns

Long Frame Sync, Master Mode

Figure 12. PCM Timing Diagram (Long Frame Sync, Master Mode)

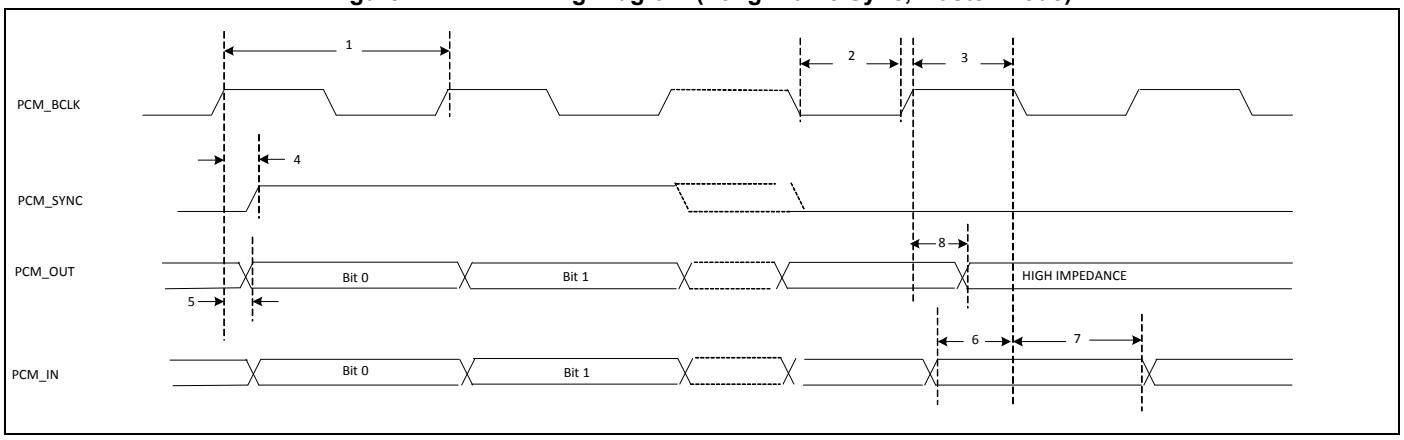

Table 8. PCM Interface Timing Specifications (Long Frame Sync, Master Mode)

Ref No.	Characteristics	Minimum	Typical	Maximum	Unit
1	PCM bit clock frequency	–	–	12	MHz
2	PCM bit clock low	41	–	–	ns
3	PCM bit clock high	41	–	–	ns
4	PCM_SYNC delay	0	–	25	ns
5	PCM_OUT delay	0	–	25	ns
6	PCM_IN setup	8	–	–	ns
7	PCM_IN hold	8	–	–	ns
8	Delay from rising edge of PCM_BCLK during last bit period to PCM_OUT becoming high impedance	0	–	25	ns

Long Frame Sync, Slave Mode

Figure 13. PCM Timing Diagram (Long Frame Sync, Slave Mode)

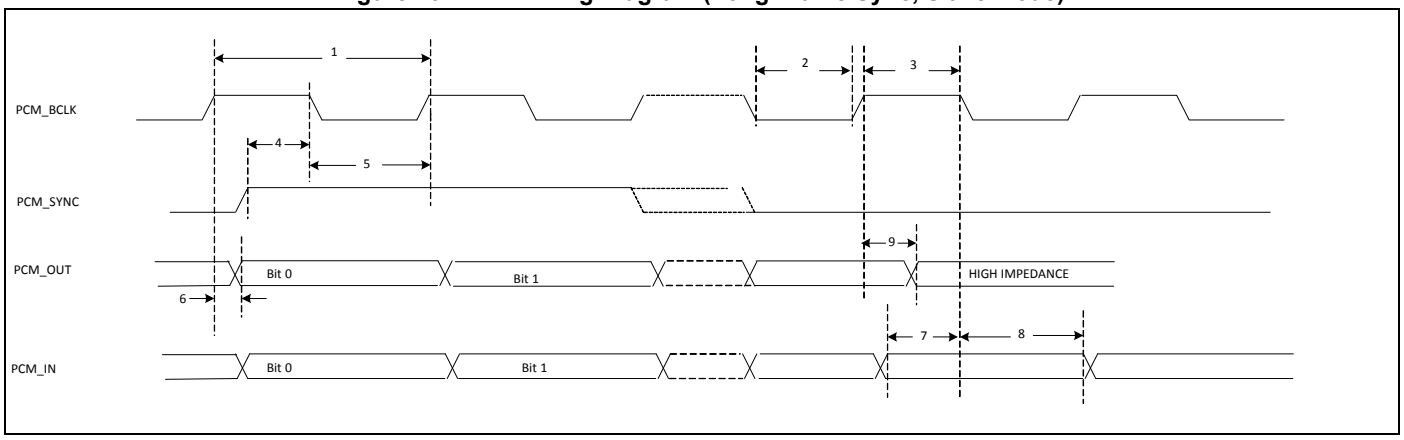

Table 9. PCM Interface Timing Specifications (Long Frame Sync, Slave Mode)

Ref No.	Characteristics	Minimum	Typical	Maximum	Unit
1	PCM bit clock frequency	–	–	12	MHz
2	PCM bit clock low	41	–	–	ns
3	PCM bit clock high	41	–	–	ns
4	PCM_SYNC setup	8	–	–	ns
5	PCM_SYNC hold	8	–	–	ns
6	PCM_OUT delay	0	–	25	ns
7	PCM_IN setup	8	–	–	ns
8	PCM_IN hold	8	–	–	ns
9	Delay from rising edge of PCM_BCLK during last bit period to PCM_OUT becoming high impedance	0	–	25	ns

Short Frame Sync, Burst Mode

Figure 14. PCM Burst Mode Timing (Receive Only, Short Frame Sync)

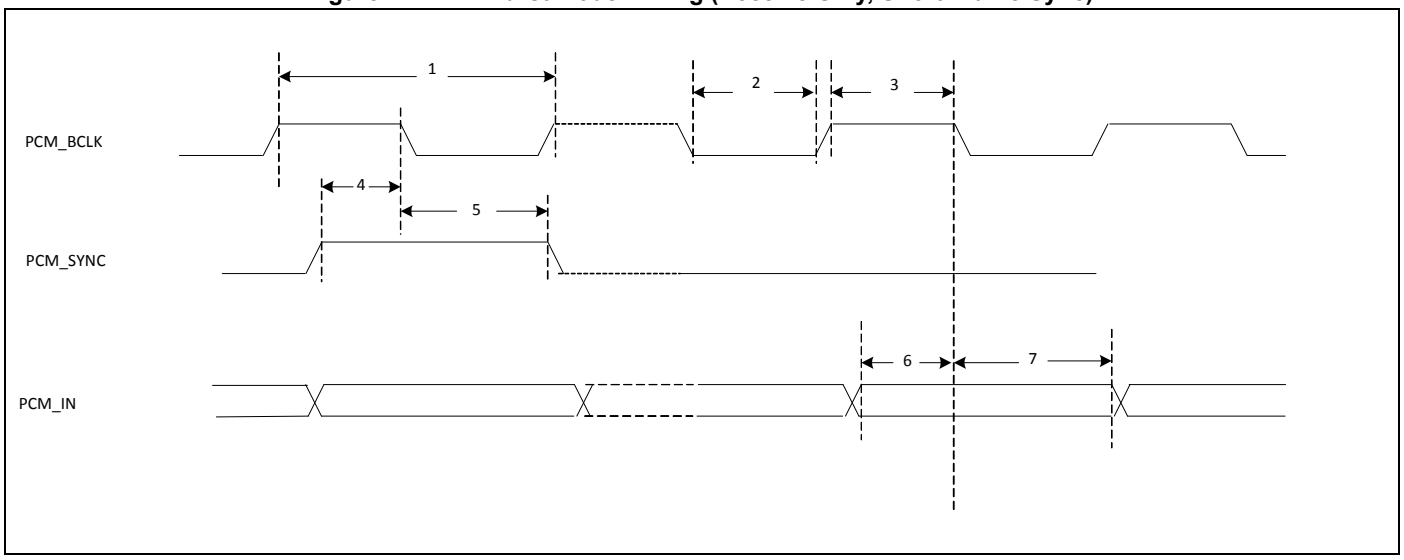

Table 10. PCM Burst Mode (Receive Only, Short Frame Sync)

Ref No.	Characteristics	Minimum	Typical	Maximum	Unit
1	PCM bit clock frequency	–	–	24	MHz
2	PCM bit clock low	20.8	–	–	ns
3	PCM bit clock high	20.8	–	–	ns
4	PCM_SYNC setup	8	–	–	ns
5	PCM_SYNC hold	8	–	–	ns
6	PCM_IN setup	8	–	–	ns
7	PCM_IN hold	8	–	–	ns

Long Frame Sync, Burst Mode

Figure 15. PCM Burst Mode Timing (Receive Only, Long Frame Sync)

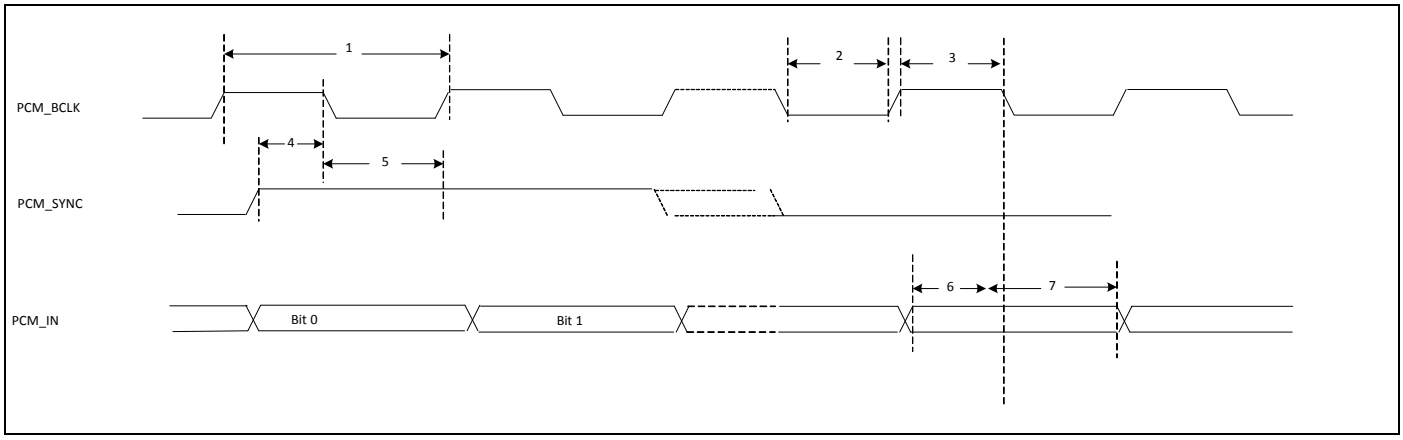

Table 11. PCM Burst Mode (Receive Only, Long Frame Sync)

Ref No.	Characteristics	Minimum	Typical	Maximum	Unit
1	PCM bit clock frequency	–	–	24	MHz
2	PCM bit clock low	20.8	–	–	ns
3	PCM bit clock high	20.8	–	–	ns
4	PCM_SYNC setup	8	–	–	ns
5	PCM_SYNC hold	8	–	–	ns
6	PCM_IN setup	8	–	–	ns
7	PCM_IN hold	8	–	–	ns

7.2 UART Interface

The CYW43340 uses a UART for Bluetooth. The UART is a standard 4-wire interface (RX, TX, RTS, and CTS) with adjustable baud rates from 9600 bps to 4.0 Mbps. The interface features an automatic baud rate detection capability that returns a baud rate selection. Alternatively, the baud rate may be selected through a vendor-specific UART HCI command.

The UART has a 1040-byte receive FIFO and a 1040-byte transmit FIFO to support EDR. Access to the FIFOs is conducted through the AHB interface through either DMA or the CPU. The UART supports the Bluetooth 4.0 UART HCI specification: H4 and H5. The default baud rate is 115.2 Kbaud.

The UART supports the 3-wire H5 UART transport, as described in the Bluetooth specification (“Three-wire UART Transport Layer”). Compared to H4, the H5 UART transport reduces the number of signal lines required by eliminating the CTS and RTS signals.

The CYW43340 UART can perform XON/XOFF flow control and includes hardware support for the Serial Line Input Protocol (SLIP). It can also perform wake-on activity. For example, activity on the RX or CTS inputs can wake the chip from a sleep state.

Normally, the UART baud rate is set by a configuration record downloaded after device reset, or by automatic baud rate detection, and the host does not need to adjust the baud rate. Support for changing the baud rate during normal HCI UART operation is included through a vendor-specific command that allows the host to adjust the contents of the baud rate registers. The CYW43340 UARTs operate correctly with the host UART as long as the combined baud rate error of the two devices is within ±2% (see Table 12).

Table 12. Example of Common Baud Rates

Desired Rate	Actual Rate	Error (%)
4000000	4000000	0.00
3692000	3692308	0.01
3000000	3000000	0.00
2000000	2000000	0.00
1500000	1500000	0.00
1444444	1454544	0.70
921600	923077	0.16
460800	461538	0.16
230400	230796	0.17
115200	115385	0.16
57600	57692	0.16
38400	38400	0.00
28800	28846	0.16
19200	19200	0.00
14400	14423	0.16
9600	9600	0.00

UART timing is defined in Figure 16 and Table 13.

Figure 16. UART Timing

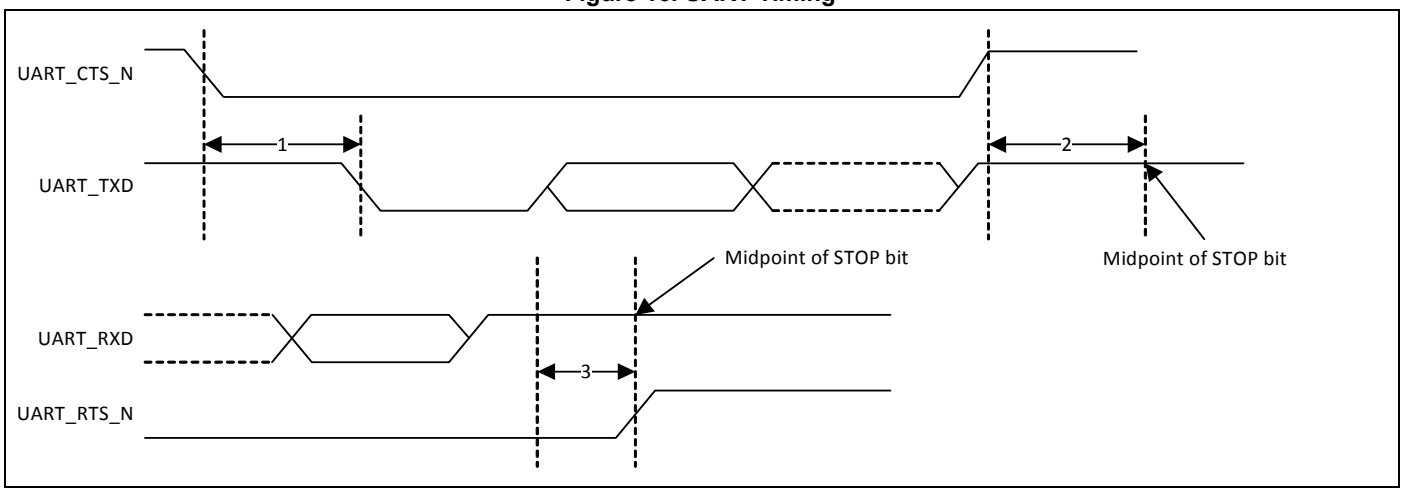

Table 13. UART Timing Specifications

Ref No.	Characteristics	Minimum	Typical	Maximum	Unit
1	Delay time, UART_CTS_N low to UART_TXD valid	–	–	1.5	Bit periods
2	Setup time, UART_CTS_N high before midpoint of stop bit	–	–	0.5	Bit periods
3	Delay time, midpoint of stop bit to UART_RTS_N high	–	–	0.5	Bit periods

7.3 I²S Interface

The CYW43340 supports an independent I²S digital audio port for high-fidelity Bluetooth audio. The I²S interface supports both master and slave modes. The I²S signals are:

- I²S clock: I²S SCK
- I²S Word Select: I²S WS
- I²S Data Out: I²S SDO
- I²S Data In: I²S SDI

I²S SCK and I²S WS become outputs in master mode and inputs in slave mode, while I²S SDO always stays as an output. The channel word length is 16 bits and the data is justified so that the MSB of the left-channel data is aligned with the MSB of the I²S bus, per the I²S specification. The MSB of each data word is transmitted one bit clock cycle after the I²S WS transition, synchronous with the falling edge of bit clock. Left-channel data is transmitted when I²S WS is low, and right-channel data is transmitted when I²S WS is high. Data bits sent by the CYW43340 are synchronized with the falling edge of I2S_SCK and should be sampled by the receiver on the rising edge of I2S_SSCK.

The clock rate in master mode is either of the following:

48 kHz x 32 bits per frame = 1.536 MHz

48 kHz x 50 bits per frame = 2.400 MHz

The master clock is generated from the input reference clock using a N/M clock divider.

In the slave mode, any clock rate is supported to a maximum of 3.072 MHz.

7.3.1 I²S Timing

Note: Timing values specified in Table 14 are relative to high and low threshold levels.

Table 14. Timing for I²S Transmitters and Receivers

	Transmitter				Receiver				Notes
	Lower LImit		Upper Limit		Lower Limit		Upper Limit		
	Min	Max	Min	Max	Min	Max	Min	Max	
Clock Period T	T_{tr}	–	–	–	T_r	–	–	–	1
Master Mode: Clock generated by transmitter or receiver									
High t_{HC}	$0.35T_{tr}$	–	–	–	$0.35T_{tr}$	–	–	–	2
Low t_{LC}	$0.35T_{tr}$	–	–	–	$0.35T_{tr}$	–	–	–	2
Slave Mode: Clock accepted by transmitter or receiver									
High t_{HC}	–	$0.35T_{tr}$	–	–	–	$0.35T_{tr}$	–	–	3
Low t_{LC}	–	$0.35T_{tr}$	–	–	–	$0.35T_{tr}$	–	–	3
Rise time t_{RC}	–	–	$0.15T_{tr}$	–	–	–		–	4
Transmitter									
Delay t_{dtr}	–	–	–	0.8T	–	–	–	–	5
Hold time t_{htr}	0	–	–	–	–	–	–	–	4
Receiver									
Setup time t_{sr}	–	–	–	–	–	$0.2T_r$	–	–	6
Hold time t_{hr}	–	–	–	–	–	0	–	–	6

Note:

- The system clock period T must be greater than T_{tr} and T_r because both the transmitter and receiver have to be able to handle the data transfer rate.
- At all data rates in master mode, the transmitter or receiver generates a clock signal with a fixed mark/space ratio. For this reason, t_{HC} and t_{LC} are specified with respect to T.
- In slave mode, the transmitter and receiver need a clock signal with minimum high and low periods so that they can detect the signal. So long as the minimum periods are greater than $0.35T_r$, any clock that meets the requirements can be used.
- Because the delay (t_{dtr}) and the maximum transmitter speed (defined by T_{tr}) are related, a fast transmitter driven by a slow clock edge can result in t_{dtr} not exceeding t_{RC} which means t_{htr} becomes zero or negative. Therefore, the transmitter has to guarantee that t_{htr} is greater than or equal to zero, so long as the clock rise-time t_{RC} is not more than t_{RCmax}, where t_{RCmax} is not less than $0.15T_{tr}$.
- To allow data to be clocked out on a falling edge, the delay is specified with respect to the rising edge of the clock signal and T, always giving the receiver sufficient setup time.
- The data setup and hold time must not be less than the specified receiver setup and hold time.
- The time periods specified in Figure 17 and Figure 18 on page 33 are defined by the transmitter speed. The receiver specifications must match transmitter performance.

Figure 17. I²S Transmitter Timing

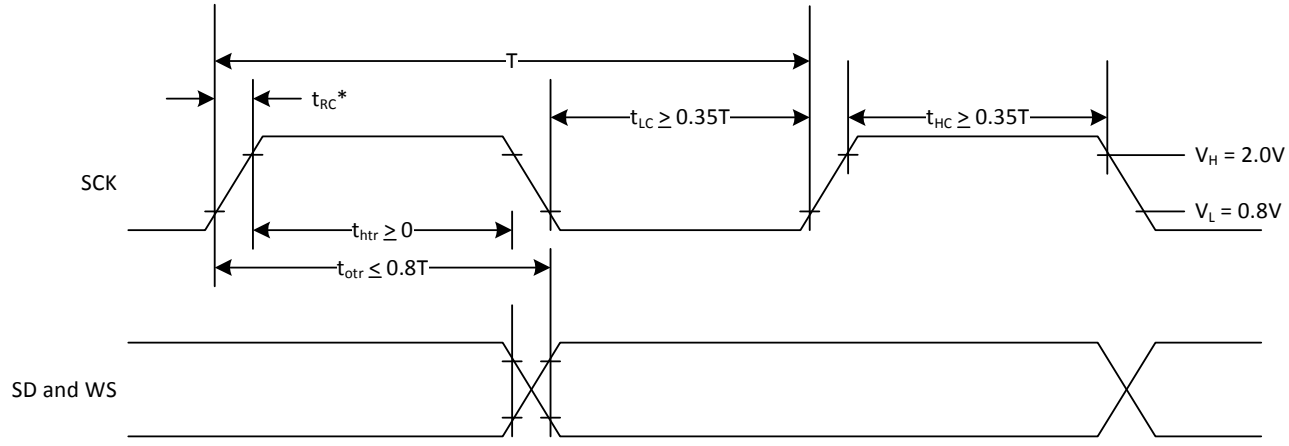

T = Clock period
T_{tr} = Minimum allowed clock period for transmitter
$T = T_{tr}$
* t_{RC} is only relevant for transmitters in slave mode.

Figure 18. I²S Receiver Timing

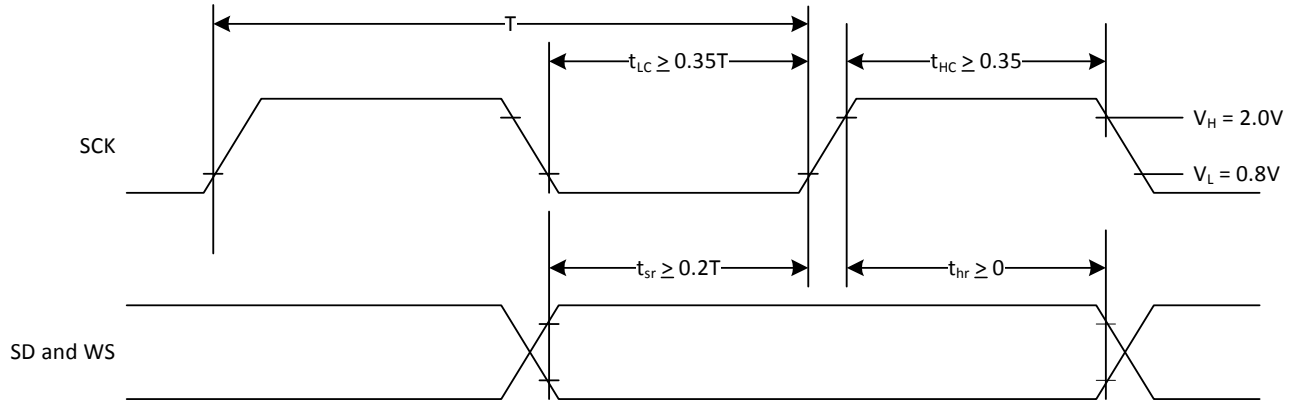

T = Clock period
T_r = Minimum allowed clock period for transmitter
$T > T_r$

8. WLAN Global Functions

8.1 WLAN CPU and Memory Subsystem

The CYW43340 includes an integrated ARM Cortex-M3™ processor with internal RAM and ROM. The ARM Cortex-M3 processor is a low-power processor that features low gate count, low interrupt latency, and low-cost debug. It is intended for deeply embedded applications that require fast interrupt response features. The processor implements the ARM architecture v7-M with support for Thumb®-2 instruction set. ARM Cortex-M3 delivers 30% more performance gain over ARM7TDMI®.

At 0.19 µW/MHz, the Cortex-M3 is the most power efficient general purpose microprocessor available, outperforming 8- and 16-bit devices on MIPS/µW. It supports integrated sleep modes.

ARM Cortex-M3 uses multiple technologies to reduce cost through improved memory utilization, reduced pin overhead, and reduced silicon area. ARM Cortex-M3 supports independent buses for code and data access (ICode/DCode and system buses). ARM Cortex-M3 supports extensive debug features including real time trace of program execution.

On-chip memory for the CPU includes 512 KB SRAM and 640 KB ROM.

8.2 One-Time Programmable Memory

Various hardware configuration parameters may be stored in an internal 3072-bit One-Time Programmable (OTP) memory, which is read by the system software after device reset. In addition, customer-specific parameters, including the system vendor ID and the MAC address can be stored, depending on the specific board design.

The initial state of all bits in an unprogrammed OTP device is 0. After any bit is programmed to a 1, it cannot be reprogrammed to 0. The entire OTP array can be programmed in a single write cycle using a utility provided with the Cypress WLAN manufacturing test tools. Alternatively, multiple write cycles can be used to selectively program specific bytes, but only bits which are still in the 0 state can be altered during each programming cycle.

Prior to OTP programming, all values should be verified using the appropriate editable nvram.txt file, which is provided with the reference board design package.

8.3 GPIO Interface

On the WLBGA package, there are 8 GPIO pins available on the WLAN section of the CYW43340 that can be used to connect to various external devices.

Upon power up and reset, these pins become tristated. Subsequently, they can be programmed to be either input or output pins via the GPIO control register.

8.4 External Coexistence Interface

An external handshake interface is available to enable signaling between the device and an external co-located wireless device, such as GPS, WiMAX, LTE, or UWB, to manage wireless medium sharing for optimum performance. The coexistence signals in Figure 19 and Table 15 can be enabled by software on the indicated GPIO pins.

Figure 19. LTE Coexistence Interface

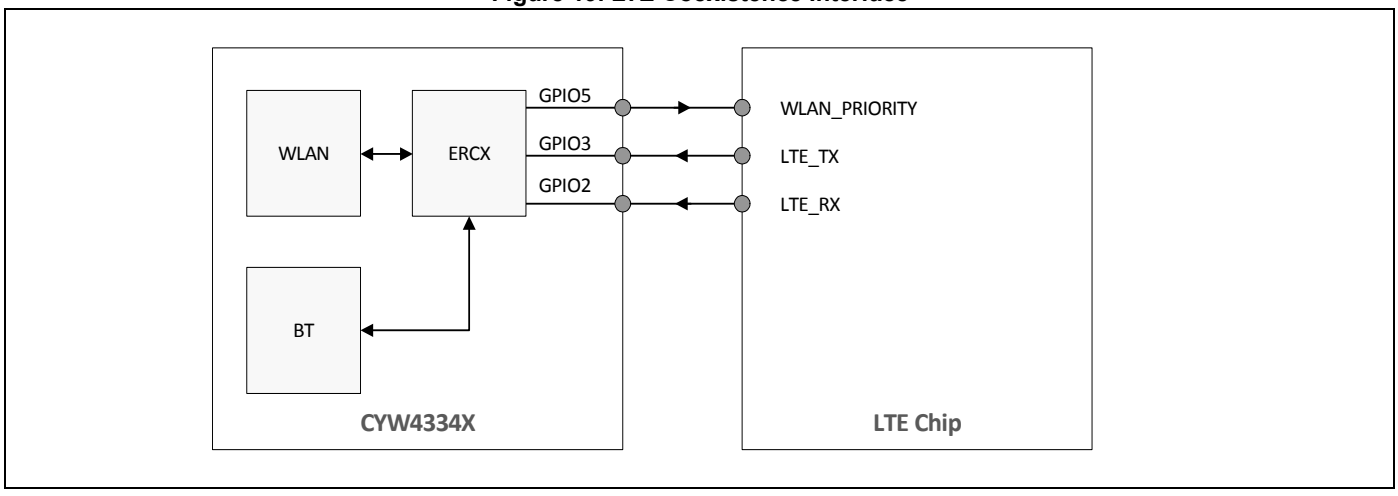

Table 15. External Coexistence Interface

Coexistence Signal	GPIO Name	Type	Comment
ERCX_TX_CONF/WLAN_PRIORITY	GPIO_5	Output	Notify LTE of request to sleep
ERCX_FREQ/LTE_TX	GPIO_3	Input	Notify WLAN RX of requirement to sleep
ERCX_RF_ACTIVE/LTE_RX	GPIO_2	Input	Notify WLAN TX to reduce TX power

8.5 UART Interface

One UART interface can be enabled by software as an alternate function on pins WL_GPIO4 and WL_GPIO_5. Provided primarily for debugging during development, this UART enables the CYW43340 to operate as RS-232 data termination equipment (DTE) for exchanging and managing data with other serial devices. It is compatible with the industry standard 16550 UART and provides a FIFO size of 64 × 8 in each direction.

8.6 JTAG Interface

The CYW43340 supports the IEEE 1149.1 JTAG boundary scan standard for performing device package and PCB assembly testing during manufacturing. In addition, the JTAG interface allows Cypress to assist customers by using proprietary debug and characterization test tools during board bring-up. Therefore, it is highly recommended to provide access to the JTAG pins by means of test points or a header on all PCB designs.

9. WLAN Host Interfaces

9.1 SDIO v2.0

The CYW43340 WLAN section supports SDIO version 2.0, including the following modes:

DS:	Default speed up to 25 MHz, including 1- and 4-bit modes (3.3V signaling)
HS:	High speed up to 50 MHz (3.3V signaling)

It also has the ability to map the interrupt signal onto a GPIO pin for applications requiring an interrupt different than what is provided by the SDIO interface. The ability to force control of the gated clocks from within the device is also provided. SDIO mode is enabled using the strapping option pins strap_host_ifc_[3:1].

Three functions are supported:

- Function 0 standard SDIO function (Max BlockSize/ByteCount = 32B)
- Function 1 backplane function to access the internal system-on-chip (SoC) address space (Max BlockSize/ByteCount = 64B)
- Function 2 WLAN function for efficient WLAN packet transfer through DMA (Max BlockSize/ByteCount = 512B)

9.1.1 SDIO Pin Descriptions

Table 16. SDIO Pin Description

SD 4-Bit Mode		SD 1-Bit Mode	
DATA0	Data line 0	DATA	Data line
DATA1	Data line 1 or Interrupt	IRQ	Interrupt
DATA2	Data line 2 or Read Wait	RW	Read Wait
DATA3	Data line 3	N/C	Not used
CLK	Clock	CLK	Clock
CMD	Command line	CMD	Command line

Figure 20. Signal Connections to SDIO Host (SD 4-Bit Mode)

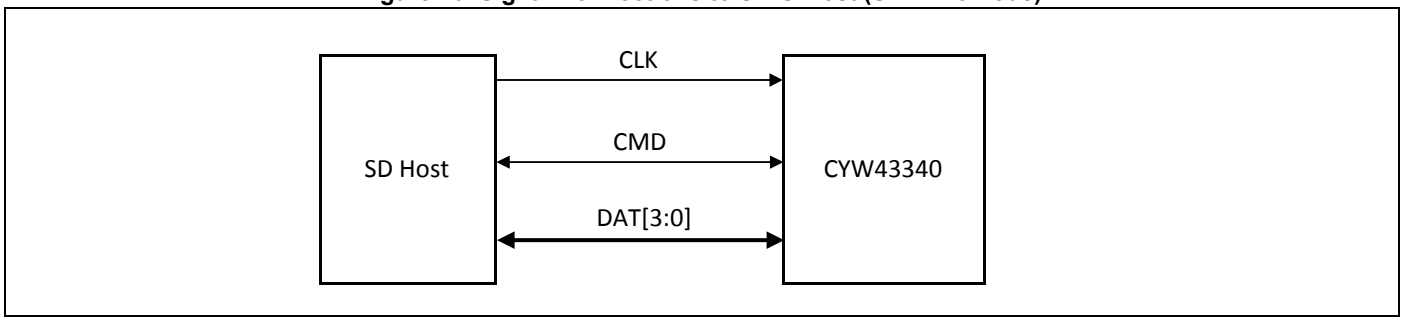

Figure 21. Signal Connections to SDIO Host (SD 1-Bit Mode)

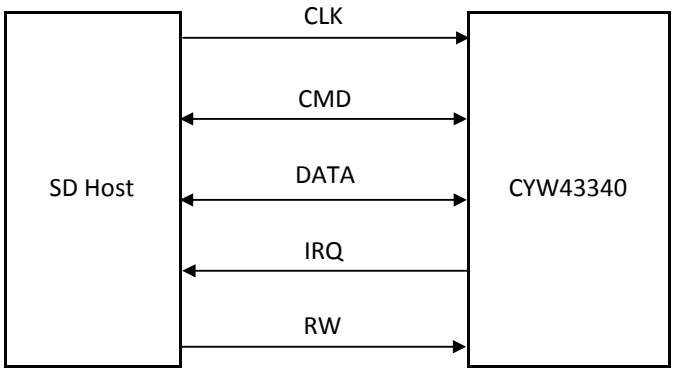

Figure 22. SDIO Pull-Up Requirements

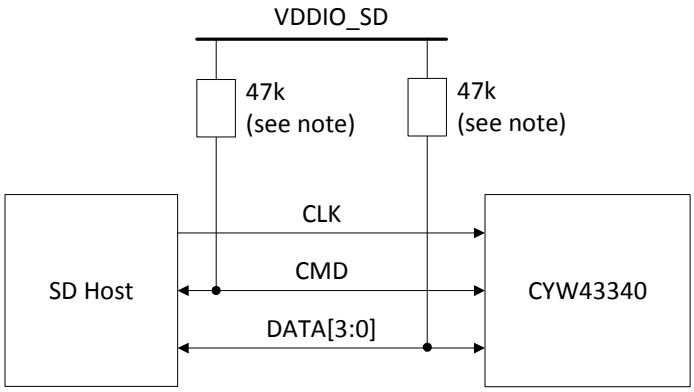

Note: Per Section 6 of the SDIO specification, 10 to 100 kohm pull-ups are required on the four DATA lines and the CMD line. This requirement must be met during all operating states by using external pull-up resistors or properly programming internal SDIO Host pull-ups. The CYW43340 does not have internal pull-ups on these lines.

9.2 HSIC Interface

As an alternative to SDIO, an HSIC host interface can be enabled using the strapping option pins strap_host_ifc_[3:1]. HSIC is a simplified derivative of the USB2.0 interface designed to replace a standard USB PHY and cable for short distances (up to 10 cm) on board point-to-point connections. Using two signals, a bidirectional data strobe (STROBE) and a bidirectional DDR data signal (DATA), it provides high-speed serial 480 Mbps data transfers that are 100% host driver compatible with traditional USB 2.0 cable-connected topologies.

Figure 23 shows the blocks in the HSIC device core.

Key features of HSIC include:

- High-speed 480 Mbps data rate
- Source-synchronous serial interface using 1.2V LVCMOS signal levels
- No power consumed except when a data transfer is in progress
- Maximum trace length of 10 cm.
- No Plug-n-Play support, no hot attach/removal

Figure 23. HSIC Device Block Diagram

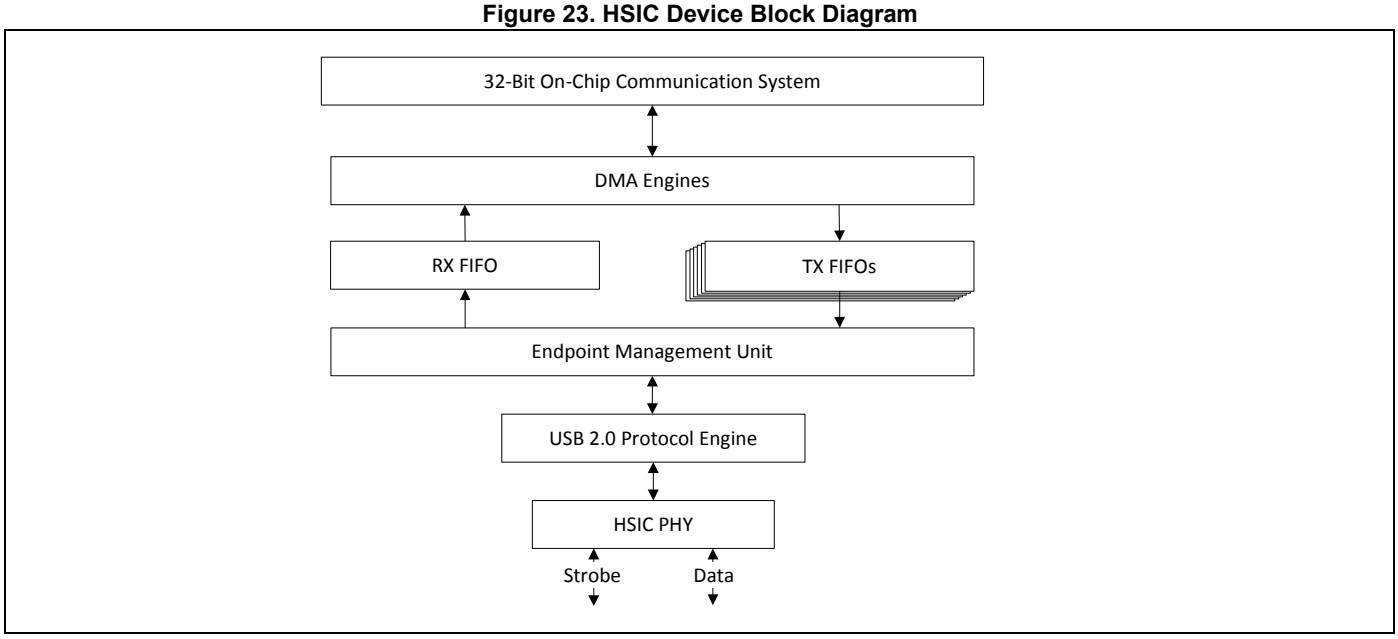

10. Wireless LAN MAC and PHY

10.1 MAC Features

The CYW43340 WLAN media access controller (MAC) supports features specified in the IEEE 802.11 base standard, and amended by IEEE 802.11n. The salient features are listed below:

- Transmission and reception of aggregated MPDUs (A-MPDU)
- Support for power management schemes, including WMM power-save, power-save multi-poll (PSMP) and multiphase PSMP operation
- Support for immediate ACK and Block-ACK policies
- Interframe space timing support, including RIFS
- Support for RTS/CTS and CTS-to-self frame sequences for protecting frame exchanges
- Back-off counters in hardware for supporting multiple priorities as specified in the WMM specification
- Timing synchronization function (TSF), network allocation vector (NAV) maintenance, and target beacon transmission time (TBTT) generation in hardware
- Hardware offload for AES-CCMP, legacy WEP ciphers, WAPI, and support for key management
- Support for coexistence with Bluetooth and other external radios
- Programmable independent basic service set (IBSS) or infrastructure basic service set functionality
- Statistics counters for MIB support

10.1.1 MAC Description

The CYW43340 WLAN MAC is designed to support high-throughput operation with low-power consumption. It does so without compromising the Bluetooth coexistence policies, thereby enabling optimal performance over both networks. In addition, several power saving modes have been implemented that allow the MAC to consume very little power while maintaining network-wide timing synchronization. The architecture diagram of the MAC is shown in Figure 24 on page 40.

The following sections provide an overview of the important modules in the MAC.

Figure 24. WLAN MAC Architecture

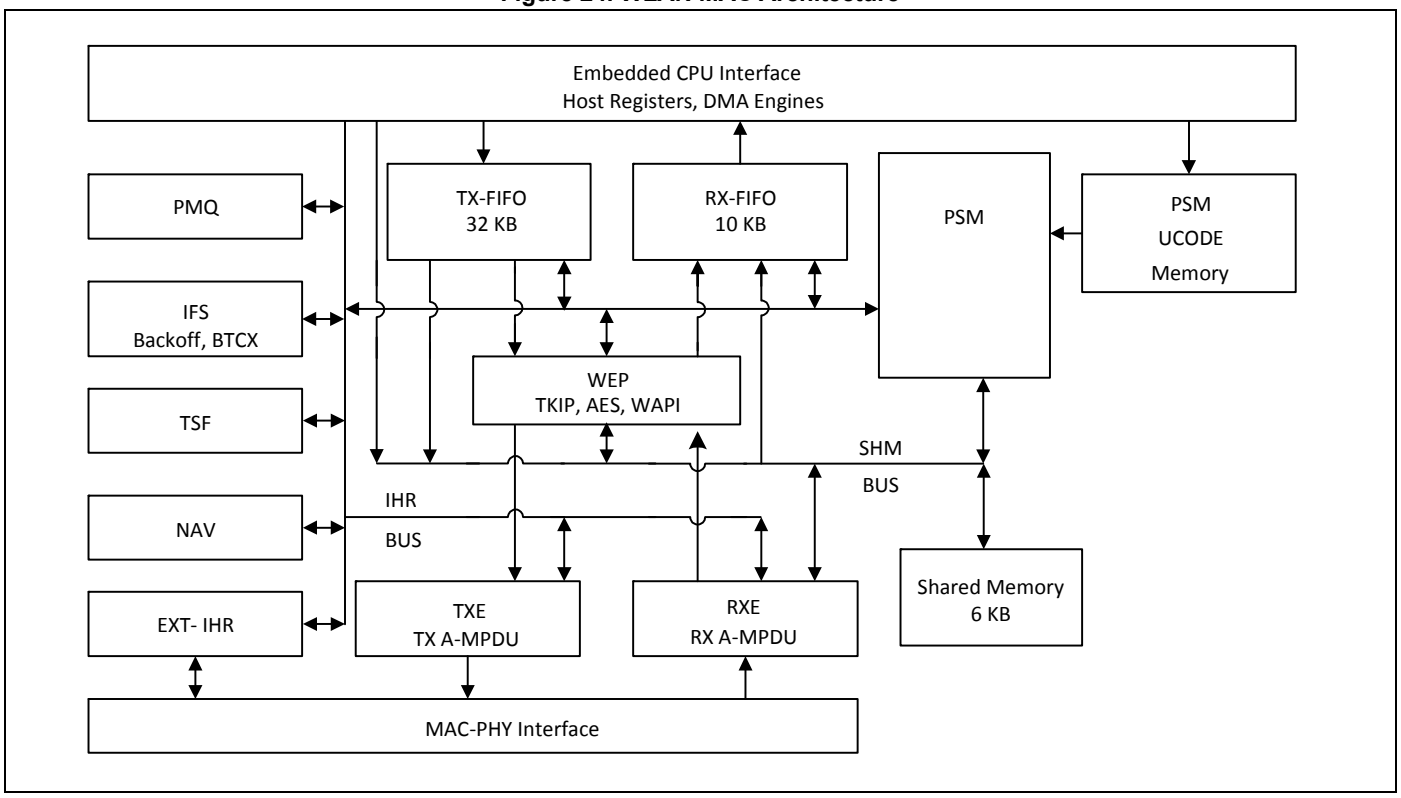

PSM

The programmable state machine (PSM) is a micro-coded engine, which provides most of the low-level control to the hardware, to implement the IEEE 802.11 specification. It is a microcontroller that is highly optimized for flow control operations, which are predominant in implementations of communication protocols. The instruction set and fundamental operations are simple and general, which allows algorithms to be optimized until very late in the design process. It also allows for changes to the algorithms to track evolving IEEE 802.11 specifications.

The PSM fetches instructions from the microcode memory. It uses the shared memory to obtain operands for instructions, as a data store, and to exchange data between both the host and the MAC data pipeline (via the SHM bus). The PSM also uses a scratchpad memory (similar to a register bank) to store frequently accessed and temporary variables.

The PSM exercises fine-grained control over the hardware engines, by programming internal hardware registers (IHR). These IHRs are co-located with the hardware functions they control, and are accessed by the PSM via the IHR bus.

The PSM fetches instructions from the microcode memory using an address determined by the program counter, instruction literal, or a program stack. For ALU operations the operands are obtained from shared memory, scratchpad, IHRs, or instruction literals, and the results are written into the shared memory, scratchpad, or IHRs.

There are two basic branch instructions: conditional branches and ALU based branches. To better support the many decision points in the IEEE 802.11 algorithms, branches can depend on either a readily available signals from the hardware modules (branch condition signals are available to the PSM without polling the IHRs), or on the results of ALU operations.

WEP

The wired equivalent privacy (WEP) engine encapsulates all the hardware accelerators to perform the encryption and decryption, and MIC computation and verification. The accelerators implement the following cipher algorithms: legacy WEP, WPA TKIP, WPA2 AES-CCMP.

The PSM determines, based on the frame type and association information, the appropriate cipher algorithm to be used. It supplies the keys to the hardware engines from an on-chip key table. The WEP interfaces with the TXE to encrypt and compute the MIC on transmit frames, and the RXE to decrypt and verify the MIC on receive frames.

TXE

The transmit engine (TXE) constitutes the transmit data path of the MAC. It coordinates the DMA engines to store the transmit frames in the TXFIFO. It interfaces with WEP module to encrypt frames, and transfers the frames across the MAC-PHY interface at the appropriate time determined by the channel access mechanisms.

The data received from the DMA engines are stored in transmit FIFOs. The MAC supports multiple logical queues to support traffic streams that have different QoS priority requirements. The PSM uses the channel access information from the IFS module to schedule a queue from which the next frame is transmitted. Once the frame is scheduled, the TXE hardware transmits the frame based on a precise timing trigger received from the IFS module.

The TXE module also contains the hardware that allows the rapid assembly of MPDUs into an A-MPDU for transmission. The hardware module aggregates the encrypted MPDUs by adding appropriate headers and pad delimiters as needed.

RXE

The receive engine (RXE) constitutes the receive data path of the MAC. It interfaces with the DMA engine to drain the received frames from the RXFIFO. It transfers bytes across the MAC-PHY interface and interfaces with the WEP module to decrypt frames. The decrypted data is stored in the RXFIFO.

The RXE module contains programmable filters that are programmed by the PSM to accept or filter frames based on several criteria such as receiver address, BSSID, and certain frame types.

The RXE module also contains the hardware required to detect A-MPDUs, parse the headers of the containers, and disaggregate them into component MPDUS.

IFS

The IFS module contains the timers required to determine interframe space timing including RIFS timing. It also contains multiple backoff engines required to support prioritized access to the medium as specified by WMM.

The interframe spacing timers are triggered by the cessation of channel activity on the medium, as indicated by the PHY. These timers provide precise timing to the TXE to begin frame transmission. The TXE uses this information to send response frames or perform transmit frame-bursting (RIFS or SIFS separated, as within a TXOP).

The backoff engines (for each access category) monitor channel activity, in each slot duration, to determine whether to continue or pause the backoff counters. When the backoff counters reach 0, the TXE gets notified, so that it may commence frame transmission. In the event of multiple backoff counters decrementing to 0 at the same time, the hardware resolves the conflict based on policies provided by the PSM.

The IFS module also incorporates hardware that allows the MAC to enter a low-power state when operating under the IEEE power save mode. In this mode, the MAC is in a suspended state with its clock turned off. A sleep timer, whose count value is initialized by the PSM, runs on a slow clock and determines the duration over which the MAC remains in this suspended state. Once the timer expires the MAC is restored to its functional state. The PSM updates the TSF timer based on the sleep duration ensuring that the TSF is synchronized to the network.

The IFS module also contains the PTA hardware that assists the PSM in Bluetooth coexistence functions.

TSF

The timing synchronization function (TSF) module maintains the TSF timer of the MAC. It also maintains the target beacon transmission time (TBTT). The TSF timer hardware, under the control of the PSM, is capable of adopting timestamps received from beacon and probe response frames in order to maintain synchronization with the network.

The TSF module also generates trigger signals for events that are specified as offsets from the TSF timer, such as uplink and downlink transmission times used in PSMP.

NAV

The network allocation vector (NAV) timer module is responsible for maintaining the NAV information conveyed through the duration field of MAC frames. This ensures that the MAC complies with the protection mechanisms specified in the standard.

The hardware, under the control of the PSM, maintains the NAV timer and updates the timer appropriately based on received frames. This timing information is provided to the IFS module, which uses it as a virtual carrier-sense indication.

MAC-PHY Interface

The MAC-PHY interface consists of a data path interface to exchange RX/TX data from/to the PHY. In addition, there is an programming interface, which can be controlled either by the host or the PSM to configure and control the PHY.

10.2 WLAN PHY Description

The CYW43340 WLAN Digital PHY is designed to comply with IEEE 802.11a/b/g/n single-stream to provide wireless LAN connectivity supporting data rates from 1 Mbps to 150 Mbps for low-power, high-performance handheld applications.

The PHY has been designed to work with interference, radio nonlinearity, and impairments. It incorporates efficient implementations of the filters, FFT and Viterbi decoder algorithms. Efficient algorithms have been designed to achieve maximum throughput and reliability, including algorithms for carrier sense/rejection, frequency/phase/timing acquisition and tracking, channel estimation and tracking. The PHY receiver also contains a robust IEEE 802.11b demodulator. The PHY carrier sense has been tuned to provide high throughput for IEEE 802.11g/11b hybrid networks with Bluetooth coexistence. It has also been designed for shared single antenna systems between WL and BT to support simultaneous RX-RX.

10.2.1 PHY Features

- Supports IEEE 802.11a, 11b, 11g, and 11n single-stream PHY standards.
- IEEE 802.11n single-stream operation in 20 MHz and 40 MHz channels
- Supports Optional Short GI and Green Field modes in TX and RX.
- Supports optional space-time block code (STBC) receive of two space-time streams.
- TX LDPC for improved range and power efficiency
- Supports IEEE 802.11h/k for worldwide operation.
- Advanced algorithms for low power, enhanced sensitivity, range, and reliability
- Algorithms to improve performance in presence of Bluetooth
- Simultaneous RX-RX (WL-BT) architecture
- Automatic gain control scheme for blocking and non blocking application scenario for cellular applications
- Closed loop transmit power control
- Digital RF chip calibration algorithms to handle CMOS RF chip non-idealities
- On-the-fly channel frequency and transmit power selection
- Supports per packet RX antenna diversity.
- Designed to meet FCC and other worldwide regulatory requirements.

Figure 25. WLAN PHY Block Diagram

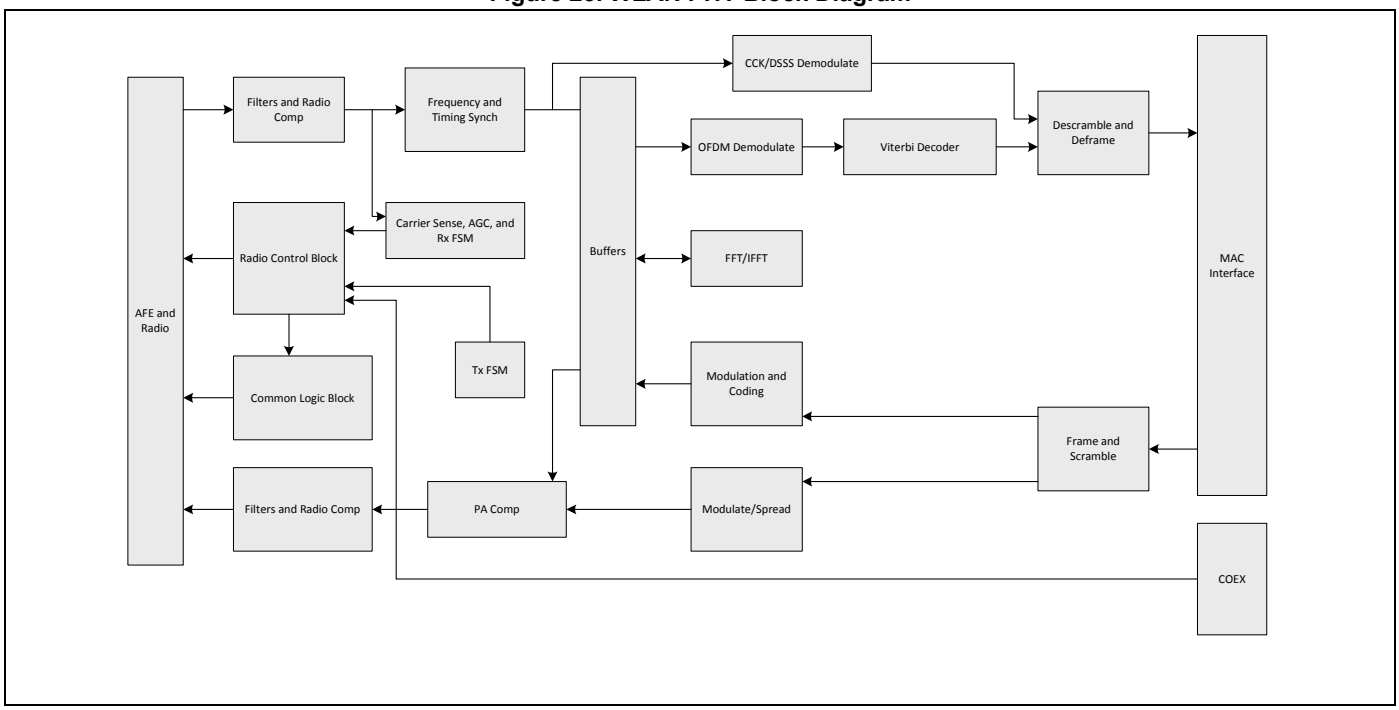

One of the key features of the PHY is its space-time block coding (STBC) capability. The STBC scheme can obtain diversity gains in a fading channel environment. On a connection with an access point that uses multiple transmit antennas and supports STBC, the CYW43340 can process two space-time streams to improve receiver performance. Figure 26 is a block diagram showing the STBC implementation in the receive path.

Figure 26. STBC Implementation in the Receive Path

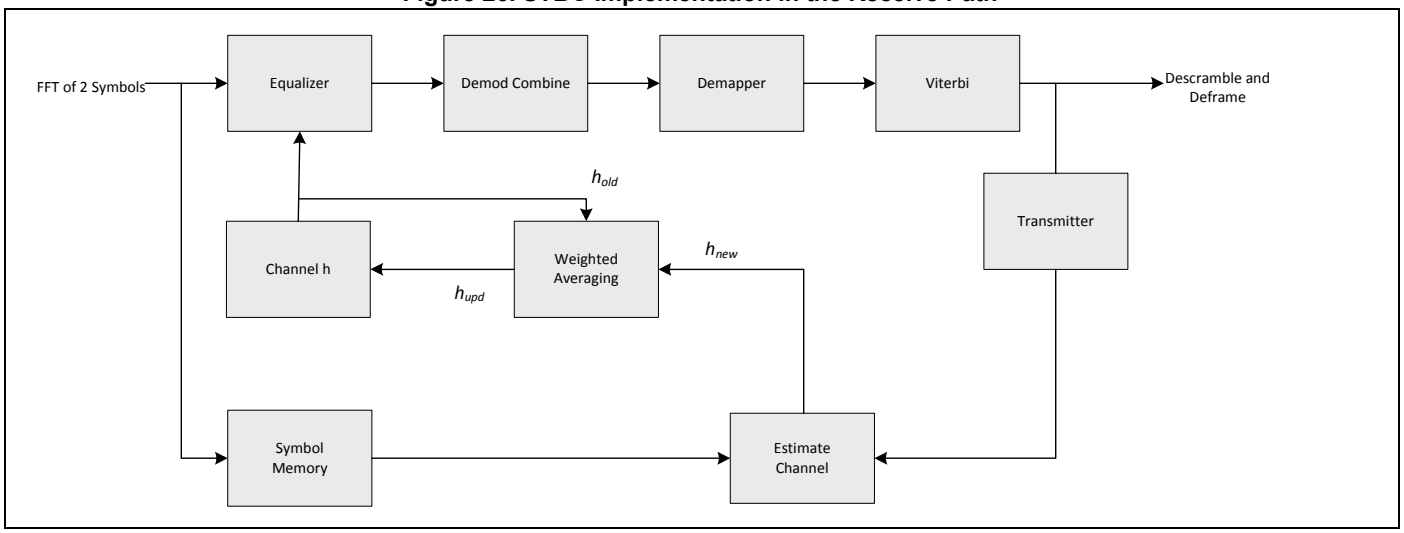

In STBC mode, symbols are processed in pairs. Equalized output symbols are linearly combined and decoded. The channel estimate is refined on every pair of symbols using the received symbols and reconstructed symbols.

11. WLAN Radio Subsystem

The CYW43340 includes an integrated dual-band WLAN RF transceiver that has been optimized for use in 2.4 GHz and 5 GHz Wireless LAN systems. It has been designed to provide low-power, low-cost, and robust communications for applications operating in the globally available 2.4 GHz unlicensed ISM or 5 GHz U-NII bands. The transmit and receive sections include all on-chip filtering, mixing, and gain control functions.

11.1 Receiver Path

The CYW43340 has a wide dynamic range, direct conversion receiver. It employs high order on-chip channel filtering to ensure reliable operation in the noisy 2.4 GHz ISM band or the entire 5 GHz U-NII band. Control signals are available that can support the use of optional external low noise amplifiers (LNA), which can increase the receive sensitivity by several dB.

11.2 Transmit Path

Baseband data is modulated and upconverted to the 2.4 GHz ISM or 5-GHz U-NII bands, respectively. The CYW43340 includes an on-chip regulator which regulates VBAT down to 3.3V for the CYW43340 on-chip linear Power Amplifiers. Closed-loop output power control is provided by means of internal a-band and g-band power detectors.

11.3 Calibration

The CYW43340 features dynamic and automatic on-chip calibration to continually compensate for temperature and process variations across components. This enables the CYW43340 to be used in high-volume applications, because calibration routines are not required during manufacturing testing. These calibration routines are performed periodically in the course of normal radio operation. Examples of some of the automatic calibration algorithms are baseband filter calibration for optimum transmit and receive performance and LOFT calibration for carrier leakage reduction. In addition, I/Q Calibration, R Calibration, and VCO Calibration are performed on-chip. No per-board calibration is required in manufacturing test, which helps to minimize test time and cost during large volume production.

12. Pinout and Signal Descriptions

12.1 Signal Assignments

Figure 27 shows the WLBGA ball map. Table 17 on page 46 contains the signal description for all packages.

Figure 27. 141-Bump CYW43340 WLBGA Ball Map (Bottom View)

	11	10	9	8	7	6	5	4	3	2	1	
A	FM_LNAVCOVDD	FM_RFIN	BT_VCOVDD	BT_LNAVDD	BT_RF	BT_PAVDD	WRF_RFIN_2G	WRF_RFOUT_2G	WRF_PAPMU_VOUT_LDO3P3	WRF_RFOUT_5G	WRF_PAPMU_VBAT_VDD5P0	A
B	FM_VCOVSS	FM_LNAVSS	BT_VCOVSS	BT_PLLVDD	BT_PAVSS	BT_IFVSS	WRF_PA2G_VBAT_VDD3P3		WRF_CBUCK_PAVDD1P5		WRF_PAPMU_GND	B
C	FM_AOUT2		FM_PLLVSS	BT_IFVDD	BT_PLLVSS			WRF_PA2G_VBAT_GND3P3	WRF_PA5G_VBAT_GND3P3_C3	WRF_PA5G_VBAT_GND3P3_C2	WRF_RFIN_5G	C
D	FM_AOUT1	FM_PLLVDD		BT_I2S_WS	BT_I2S_CLK	VSSC_D6	WRF_LNA_2G_GND1P2	WRF_PADRV_VBAT_VDD3P3	WRF_PADRV_VBAT_GND3P3	WRF_GPIO_OUT	WRF_LNA_5G_GND1P2	D
E	CLK_REQ	BT_DEV_WAKE	VDDC_E9	BT_PCM_OUT	BT_I2S_DO		WRF_RX_GND1P2	WRF_TX_GND1P2			WRF_VCO_GND1P2	E
F	LPO_IN	BT_HOST_WAKE	BT_PCM_IN	BT_PCM_CLK	BT_PCM_SYNC		WRF_AFE_GND1P2	WRF_BUCK_VDD1P5	WL_GPIO_1	WRF_SYNTH_VDD1P2	WRF_XTAL_CAB_VDD1P2	F
G	BT_UART_CTS_N	BT_UART_TXD	NC_G9	RF_SW_CTRL_3	VSSC_G7	RF_SW_CTRL_2	WL_GPIO_6	WL_GPIO_2	WL_GPIO_0	WRF_SYNTH_GND1P2	WRF_XTAL_CAB_XOP	G
H	BT_UART_RTS_N	BT_UART_RXD	VDDIO_H9	RF_SW_CTRL_4	VDDC_H7	RF_SW_CTRL_1	WL_GPIO_5	WL_GPIO_3	WRF_TCXO_VDD1P8	WRF_XTAL_CAB_GND1P2	WRF_XTAL_CAB_XON	H
J	NC_J11	VSS_J10	NC_J9	VSS_J8	WL_GPIO_4	VDDIO_RF	WL_GPIO_12	VDDIO_J4	WRF_TCXO_CKIN2V	BT_REG_ON	WL_REG_ON	J
K	VSS_K11	VSS_K10	NC_K9	VSS_K8	NC_K7		SDIO_DATA_2	SDIO_DATA_3	RREFHSIC	HSIC_DATA	VDDC_K1	K
L	VSS_L11	VSS_L10	VSS_L9	VSS_L8	NC_L7	RF_SW_CTRL_0	SDIO_DATA_0	SDIO_DATA_1	HSIC_DVDD1P2_OUT	HSIC_STROBE	HSIC_AGND12PLL	L
M	VSS_M11	VSS_M10	VSS_M9	VSS_M8	NC_M7	SDIO_CLK	SDIO_CMD	JTAG_SEL		VSSC_M2	PMU_AVSS	M
N	VSS_N11	VSS_N10	VSS_N9	VSS_N8	VSS_N7	VSSC_N6		VOUT_2P5	VOUT_CLDO	SR_VDDBATA5V	SR_VLX	N
P	VSS_P11	VSS_P10	VSS_P9	VSS_P8	VSS_P7	VSS_P6	VDDC_P5	VOUT_LNLDO	LDO_VDD1P5	SR_VDDBATP5V	SR_PVSS	P
	11	10	9	8	7	6	5	4	3	2	1	

Top layer metal restrict

Depopulated

12.2 Signal Descriptions

The signal name, type, and description of each pin in the CYW43340 is listed in Table 17. The symbols shown under Type indicate pin directions (I/O = bidirectional, I = input, O = output) and the internal pull-up/pull-down characteristics (PU = weak internal pull-up resistor and PD = weak internal pull-down resistor), if any. See also Table 18 on page 53 for resistor strapping options.

Table 17. WLBGA Signal Descriptions

WLBGA Ball		Signal Name	Type	Description
WLAN RF Signal Interface				
A5		WRF_RFIN_2G	I	2.4G RF input
C1		WRF_RFIN_5G	I	5G RF input
A4		WRF_RFOUT_2G	O	2.4G RF output
A2		WRF_RFOUT_5G	O	5G RF output
D2		WRF_GPIO_OUT	I/O	–
RF Control Signals				
L6		RF_SW_CTRL_0	O	RF switch enable
H6		RF_SW_CTRL_1	O	RF switch enable
G6		RF_SW_CTRL_2	O	RF switch enable
G8		RF_SW_CTRL_3	O	RF switch enable
H8		RF_SW_CTRL_4	O	RF switch enable
SDIO Bus Interface				
M6		SDIO_CLK	I	SDIO clock input
M5		SDIO_CMD	I/O	SDIO command line
L5		SDIO_DATA_0	I/O	SDIO data line 0
L4		SDIO_DATA_1	I/O	SDIO data line 1. Also used as a strapping option (see Table 18 on page 53).
K5		SDIO_DATA_2	I/O	SDIO data line 2. Also used as a strapping option (see Table 18 on page 53).
K4		SDIO_DATA_3	I/O	SDIO data line 3
Note: Per Section 6 of the SDIO specification, 10 to 100 kohm pull-ups are required on the four DATA lines and the CMD line. This requirement must be met during all operating states by using external pull-up resistors or properly programming internal SDIO Host pull-ups.				
JTAG Interface				
M4		JTAG_SEL	I/O	JTAG select: Connect this pin high (VDDIO) in order to use GPIO_2 through GPIO_5 and GPIO_12 as JTAG signals. Otherwise, if this pin is left as a NO_CONNECT, its internal pull-down selects the default mode that allows GPIOs 2, 3, 4, 5, and 12 to be used as GPIOs. Note: See "WLAN GPIO Interface" on page 47 for the JTAG signal pins.
HSIC Interface				
L2		HSIC_STROBE	I	HSIC Strobe
K2		HSIC_DATA	I/O	HSIC Data
K3		RREFHSIC	I	HSIC reference resistor input. If HSIC is used, connect this pin to ground via a 51Ω 5% resistor.

Table 17. WLBGA Signal Descriptions (Cont.)

WLBGA Ball		Signal Name	Type	Description
WLAN GPIO Interface				
G3		WL_GPIO_0	I/O	This pin can be programmed by software to be a GPIO.
F3		WL_GPIO_1	I/O	This pin can be programmed by software to be a GPIO or an AP_READY or HSIC_HOST_READY input from the host indicating that it is awake.
G4		WL_GPIO_2	I/O	This pin can be programmed by software to be a GPIO, the JTAG TCK or an HSIC_READY output to the host, indicating that the device is ready to respond with a CONNECT when it sees IDLE on the HSIC bus.
H4		WL_GPIO_3	I/O	This pin can be programmed by software to be a GPIO or the JTAG TMS signal.
J7		WL_GPIO_4	I/O	This pin can be programmed by software to be a GPIO, the JTAG TDI signal, the UART RX signal, or as the WLAN_HOST_WAKE output indicating that host wake-up should be performed.
H5		WL_GPIO_5	I/O	This pin can be programmed by software to be a GPIO, the JTAG TDO signal or the UART TX signal.
G5		WL_GPIO_6	I/O	GPIO pin. ***Note:*** Some GPIOs are also used as strapping options (see Table 18 on page 53).
J5		WL_GPIO_12	I/O	This pin can be programmed by software to be a GPIO or the JTAG TRST_L signal. GPIO12 has an internal pull-down by default if JTAG_SEL is low. When JTAG_SEL is high, GPIO12 is used as JTAG_TRST_L and is pulled up. This pin is also used as WLAN_DEV_WAKE, an out-of- band wake-up signal when the host wants to wake WLAN from the deep sleep mode. ***Note:*** Some GPIOs are also used as strapping options (see Table 18 on page 53).

Table 17. WLBGA Signal Descriptions (Cont.)

WLBGA Ball		Signal Name	Type	Description
Clocks				
H1		WRF_XTAL_CAB_XON	O	XTAL oscillator output
G1		WRF_XTAL_CAB_XOP	I	XTAL oscillator input
J3		WRF_TCXO_CKIN2V	I	TCXO buffered input. When not using a TCXO this pin should be connected to ground.
E11		CLK_REQ	O	External system clock request—Used when the system clock is not provided by a dedicated crystal (for example, when a shared TCXO is used). Asserted to indicate to the host that the clock is required. Shared by BT, and WLAN. Can also be programmed as the BT_I2S_DI input pin if CLK_REQ functionality is not required.
F11		LPO_IN	I	External sleep clock input (32.768 kHz)
Bluetooth/FM Receiver				
A7		BT_RF	I/O	Bluetooth transceiver RF antenna port
D11		FM_AOUT1	O	FM analog output 1
C11		FM_AOUT2	O	FM analog output 2
A10		FM_RFIN	I	FM radio antenna port
Bluetooth PCM				
F8		BT_PCM_CLK	I/O	PCM clock; can be master (output) or slave (input)
F9		BT_PCM_IN	I	PCM data input sensing
E8		BT_PCM_OUT	O	PCM data output
F7		BT_PCM_SYNC	I/O	PCM sync; can be master (output) or slave (input)

Table 17. WLBGA Signal Descriptions (Cont.)

WLBGA Ball		Signal Name	Type	Description
Bluetooth UART and Wake				
G11		BT_UART_CTS_N	I	UART clear-to-send. Active-low clear-to-send signal for the HCI UART interface.
H11		BT_UART_RTS_N	O	UART request-to-send. Active-low request-to-send signal for the HCI UART interface.
H10		BT_UART_RXD	I	UART serial input. Serial data input for the HCI UART interface.
G10		BT_UART_TXD	O	UART serial output. Serial data output for the HCI UART interface.
E10		BT_DEV_WAKE	I/O	DEV_WAKE or general-purpose I/O signal
F10		BT_HOST_WAKE	I/O	HOST_WAKE or general-purpose I/O signal
Note: By default, the Bluetooth BT WAKE signals provide GPIO/WAKE functionality, and the UART pins provide UART functionality. Through software configuration, the PCM interface can also be routed over the BT_WAKE/UART signals as follows: ■ PCM_CLK on the UART_RTS_N pin ■ PCM_OUT on the UART_CTS_N pin ■ PCM_SYNC on the BT_HOST_WAKE pin ■ PCM_IN on the BT_DEV_WAKE pin In this case, the BT HCI transport included sleep signaling will operate using UART_RXD and UART_TXD; that is, using a 3-Wire UART Transport.				
Bluetooth/FM I^2S				
D7		BT_I2S_CLK	I/O	I^2S clock; can be master (output) or slave (input)
E7		BT_I2S_DO	I/O	I^2S data output
D8		BT_I2S_WS	I/O	I^2S WS; can be master (output) or slave (input)
Miscellaneous				
J1		WL_REG_ON	I	Used by PMU to power up or power down the internal CYW43340 regulators used by the WLAN section. Also, when deasserted, this pin holds the WLAN section in reset. This pin has an internal 200 kΩ pull-down resistor that is enabled by default. It can be disabled through programming.
J2		BT_REG_ON	I	Used by PMU to power up or power down the internal CYW43340 regulators used by the Bluetooth/FM section. Also, when deasserted, this pin holds the Bluetooth/FM section in reset. This pin has an internal 200 kΩ pull-down resistor that is enabled by default. It can be disabled through programming.

Table 17. WLBGA Signal Descriptions (Cont.)

WLBGA Ball		Signal Name	Type	Description
Integrated Voltage Regulators				
N2		SR_VDDBATA5V	I	Quiet VBAT
P2		SR_VDDBATP5V	I	Power VBAT
N1		SR_VLX	O	CBUCK switching regulator output. See Table 35 on page 77 for details of the inductor and capacitor required on this output.
P3		LDO_VDD1P5	I	Input for the LNLDO, CLDO, and HSIC LDOs. It is also the voltage feedback pin for the CBUCK regulator.
P4		VOUT_LNLDO	O	Output of low-noise LNLDO
N3		VOUT_CLDO	O	Output of core LDO
Bluetooth Power Supplies				
A6		BT_PAVDD	I	Bluetooth PA power supply
A8		BT_LNAVDD	I	Bluetooth LNA power supply
C8		BT_IFVDD	I	Bluetooth IF block power supply
B8		BT_PLLVDD	I	Bluetooth RF PLL power supply
A9		BT_VCOVDD	I	Bluetooth RF power supply
FM Receiver Power Supplies				
D10		FM_PLLVDD	I	FM PLL power supply
A11		FM_LNAVCOVDD	I	FM VCO and receiver power supply pin
WLAN Power Supplies				
F4		WRF_BUCK_VDD1P5	I	Internal LDO supply from CBUCK for VCO, AFE, TX, and RX
B3		WRF_CBUCK_PAVDD1P5	I	NO_CONNECT
B5		WRF_PA2G_VBAT_VDD3P3	I	2G PA 3.3V Supply
D4		WRF_PADRV_VBAT_VDD3P3	I	3.3V supply for A/G band PAD
A1		WRF_PAPMU_VBAT_VDD5P0	I	PAPMU VBAT power supply
A3		WRF_PAPMU_VOUT_LDO3P3	O	PAPMU 3.3V LDO output voltage
F2		WRF_SYNTH_VDD1P2	I	Synth VDD 1.2V input
H3		WRF_TCXO_VDD1P8	I	Supply to the WRF_TCXO_CKIN input buffer. When not using a TCXO, this pin should be connected to ground.
F1		WRF_XTAL_CAB_VDD1P2	I	XTAL oscillator supply

Table 17. WLBGA Signal Descriptions (Cont.)

WLBGA Ball		Signal Name	Type	Description
Miscellaneous Power Supplies				
L3		HSIC_DVDD1P2_OUT	O	1.2V supply for HSIC interface. This pin can be NO_CONNECT when HSIC is not used.
E9		VDDC_E9	I	Core supply for WLAN and BT.
H7		VDDC_H7	I	
K1		VDDC_K1	I	
P5		VDDC_P5	I	
H9		VDDIO_H9	I	I/O supply (1.8–3.3V). For the WLBGA package, this is the supply for both SDIO and other I/O pads.
J4		VDDIO_J4	I	
J6		VDDIO_RF	I	I/O supply for RF switch control pads (3.3V)
N4		VOUT_2P5	O	2.5V LDO output
Ground				
B7		BT_PAVSS	I	Bluetooth PA ground
B6		BT_IFVSS	I	1.2V Bluetooth IF block ground
C7		BT_PLLVSS	I	Bluetooth RF PLL ground
B9		BT_VCOVSS	I	1.2V Bluetooth RF ground
B11		FM_VCOVSS	I	FM VCO ground
B10		FM_LNAVSS	I	FM receiver ground
C9		FM_PLLVSS	I	FM PLL ground
L1		HSIC_AGND12PLL	I	HSIC PLL ground
M1		PMU_AVSS	I	Quiet ground
P1		SR_PVSS	I	Power ground
D6		VSSC_D6	I	Core ground for WLAN and BT
G7		VSSC_G7	I	
M2		VSSC_M2	I	
N6		VSSC_N6	I	
G2		WRF_SYNTH_GND1P2	I	Synth ground
F5		WRF_AFE_GND1P2	I	AFE ground
D5		WRF_LNA_2G_GND1P2	I	2 GHz internal LNA ground
D1		WRF_LNA_5G_GND1P2	I	5 GHz internal LNA ground
C4		WRF_PA2G_VBAT_GND3P3	I	2.4 GHz PA ground
C2		WRF_PA5G_VBAT_GND3P3_C2	I	5 GHz PA ground
C3		WRF_PA5G_VBAT_GND3P3_C3		
B1		WRF_PAPMU_GND	I	PMU ground
D3		WRF_PADRV_VBAT_GND3P3	I	PA driver ground
E5		WRF_RX_GND1P2	I	RX ground
E4		WRF_TX_GND1P2	I	TX ground
E1		WRF_VCO_GND1P2	I	VCO/LOGEN ground
H2		WRF_XTAL_CAB_GND1P2	I	XTAL ground
J8		VSS_J8	I	Ground
J10		VSS_J10	I	Ground

Table 17. WLBGA Signal Descriptions (Cont.)

WLBGA Ball		Signal Name	Type	Description
K8		VSS_K8	I	Ground
K10		VSS_K10	I	Ground
K11		VSS_K11	I	Ground
L8		VSS_L8	I	Ground
L9		VSS_L9	I	Ground
L10		VSS_L10	I	Ground
L11		VSS_L11	I	Ground
M8		VSS_M8	I	Ground
M9		VSS_M9	I	Ground
M10		VSS_M10	I	Ground
M11		VSS_M11	I	Ground
N7		VSS_N7	I	Ground
N8		VSS_N8	I	Ground
N9		VSS_N9	I	Ground
N10		VSS_N10	I	Ground
N11		VSS_N11	I	Ground
P6		VSS_P6	I	Ground
P7		VSS_P7	I	Ground
P8		VSS_P8	I	Ground
P9		VSS_P9	I	Ground
P10		VSS_P10	I	Ground
P11		VSS_P11	I	Ground
No Connect				
G9		NC_G9	–	No Connect
J9		NC_J9	–	
J11		NC_J11	–	
K7		NC_K7	–	
K9		NC_K9	–	
L7		NC_L7	–	
M7		NC_M7	–	

12.2.1 WLAN GPIO Signals and Strapping Options

The pins listed in Table 18 on page 53 are sampled at power-on reset (POR) to determine the various operating modes. Sampling occurs a few milliseconds after an internal POR or deassertion of the external POR. After the POR, each pin assumes the GPIO or alternative function specified in the signal descriptions table. Each strapping option pin has an internal pull-up (PU) or pull-down (PD) resistor that determines the default mode. To change the mode, connect an external PU resistor to VDDIO or a PD resistor to GND, using a 10 kΩ resistor or less.

Note: Refer to the reference board schematics for more information.

Table 18. WLAN GPIO Functions and Strapping Options (Advance Information)

Pin Name	WLBGA Pin #		Default	Function	Description
SDIO_DATA_1	F9		0	strap_host_ifc_1	The three strap pins strap_host_ifc_[3:1] select the host interface[a] to enable: ■ 0XX: SDIO ■ 10X: xx ■ 110: normal HSIC ■ 111: bootloader-less HSIC
SDIO_DATA_2	G8		0	strap_host_ifc_2	■ 1: select SDIO mode
GPIO_6/ MODE_SEL	J6		0	strap_host_ifc_3	■ 0: select SDIO mode ■ 1: select HSIC mode
JTAG_SEL	M4		N/A	JTAG select	■ JTAG select: Connect this pin high (VDDIO) in order to use GPIO_2 through GPIO_5 and GPIO_12 as JTAG signals. Otherwise, if this pin is left as a NO_CONNECT, its internal Pull-down selects the default mode that allows GPIOs 2, 3, 4, 5, and 12 to be used as GPIOs. ***Note:*** See "WLAN GPIO Interface" on page 47 for the JTAG signal pins.

a.The unused host interface is tristated. However, the SDIO lines have internal pulls activated when in HSIC mode (see Table 20: "I/O States," on page 54). There are no bus-keepers on the HSIC interface when it is not in use.

12.2.2 CIS Select Options

CIS select options are defined in Table 19.

12.3 I/O States

Table 19. CIS Select

OTPEnabled	CIS Source	OTP State	ChipID Source
0	Default	OFF	Default
1	OTP if programmed, else default	ON	OTP if programmed, else default

The following notations are used in Table 20:

- I: Input signal
- O: Output signal
- I/O: Input/Output signal
- PU = Pulled up
- PD = Pulled down
- NoPull = Neither pulled up nor pulled down

Table 20. I/O States

Name	*I/O*	*Keeper*	*Active Mode*	*Low Power State/ Sleep (All Power Present)*	*Power-down (BT_REG_ON and WL_REG_ON Held Low)*	*Out-of-Reset; Before SW Download (BT_REG_ON=1; WL_REG_ON=1)*	*(WL_REG_ON=1 and BT_REG_ON=0) and VDDIOs Are Present*	*(WL_REG_ON=0 and BT_REG_ON=1) and VDDIOs Are Present*	*Power Rail*
WL_REG_ON	I	N	Input; PD (pull-down can be disabled)	Input; PD (pull-down can be disabled)	Input; PD (of 200K)	Input; PD (of 200k)	Input; PD (of 200k)	–	–
BT_REG_ON	I	N	Input; PD (pull down can be disabled)	Input; PD (pull down can be disabled)	Input; PD (of 200K)	Input; PD (of 200k)	Input; PD (of 200k)	–	–
CLK_REQ	I/O	Y	Open drain or push-pull (programmable). Active high.	Open drain or push-pull (programmable). Active high	PD	Open drain. Active high.	Open drain. Active high.	–	BT_VDDO
BT_HOST_WAKE	I/O	Y	I/O; PU, PD, NoPull (programmable)	I/O; PU, PD, NoPull (programmable)	High-Z, NoPull	Input, PD	Input, PD	–	BT_VDDO
BT_DEV_WAKE	I/O	Y	I/O; PU, PD, NoPull (programmable)	Input; PU, PD, NoPull (programmable)	High-Z, NoPull	Input, PD	Input, PD	–	BT_VDDO
BT_UART_CTS	I	Y	Input; NoPull	Input; NoPull	High-Z, NoPull	Input; PU	Input; PU	–	BT_VDDO
BT_UART_RTS	O	Y	Output; NoPull	Output; NoPull	High-Z, NoPull	Input; PU	Input; PU	–	BT_VDDO
BT_UART_RXD	I	Y	Input; PU	Input; NoPull	High-Z, NoPull	Input; PU	Input; PU	–	BT_VDDO
BT_UART_TXD	O	Y	Output; NoPull	Output; NoPull	High-Z, NoPull	Input; PU	Input; PU	–	BT_VDDO

Table 20. I/O States (Cont.)

Name	*I/O*	*Keeper*	*Active Mode*	*Low Power State/ Sleep (All Power Present)*	*Power-down (BT_REG_ON and WL_REG_ON Held Low)*	*Out-of-Reset; Before SW Download (BT_REG_ON=1; WL_REG_ON=1)*	*(WL_REG_ON=1 and BT_REG_ON=0) and VDDIOs Are Present*	*(WL_REG_ON=0 and BT_REG_ON=1) and VDDIOs Are Present*	*Power Rail*
SDIO_DATA_0	I/O	N	HSIC MODE -> PU; SDIO MODE -> NoPull	HSIC MODE -> PU; SDIO MODE -> NoPull	HSIC MODE -> NoPull; SDIO MODE -> NoPull	HSIC MODE -> PU; SDIO MODE -> NoPull	HSIC MODE -> PU; SDIO MODE -> NoPull	–	WL_VDDIO
SDIO_DATA_1	I/O	N	HSIC MODE -> PD; SDIO MODE -> NoPull	HSIC MODE -> PD; SDIO MODE -> NoPull	HSIC MODE -> NoPull; SDIO MODE -> NoPull	HSIC MODE -> PD; SDIO MODE -> PD	HSIC MODE -> PD; SDIO MODE -> NoPull	–	WL_VDDIO
SDIO_DATA_2	I/O	N	HSIC MODE -> PU; SDIO MODE -> NoPull	HSIC MODE -> PU; SDIO MODE -> NoPull	HSIC MODE -> NoPull; SDIO MODE -> NoPull	HSIC MODE -> PU; SDIO MODE -> PD	HSIC MODE -> PU; SDIO MODE -> NoPull	–	WL_VDDIO
SDIO_DATA_3	I/O	N	HSIC MODE -> PU; SDIO MODE -> NoPull	HSIC MODE -> PU; SDIO MODE -> NoPull	HSIC MODE -> NoPull; SDIO MODE -> NoPull	HSIC MODE -> PU; SDIO MODE -> NoPull	HSIC MODE -> PU; SDIO MODE -> NoPull	–	WL_VDDIO
SDIO_CMD	I/O	N	HSIC MODE -> PU; SDIO MODE -> NoPull	HSIC MODE -> PU; SDIO MODE -> NoPull	HSIC MODE -> NoPull; SDIO MODE -> NoPull	HSIC MODE -> PU; SDIO MODE -> NoPull	HSIC MODE -> PU; SDIO MODE -> NoPull	–	WL_VDDIO
SDIO_CLK	I	N	HSIC MODE -> PD; SDIO MODE -> NoPull	HSIC MODE -> PD; SDIO MODE -> NoPull	HSIC MODE -> NoPull; SDIO MODE -> NoPull	HSIC MODE -> PD; SDIO MODE -> NoPull	HSIC MODE -> PD; SDIO MODE -> NoPull	–	WL_VDDIO
BT_PCM_CLK	I/O	Y	Input; NoPull (Note 4)	Input; NoPull (Note 4)	High-Z, NoPull	Input, PD	Input, PD	–	BT_VDDO
BT_PCM_IN	I/O	Y	Input; NoPull (Note 4)	Input; NoPull (Note 4)	High-Z, NoPull	Input, PD	Input, PD	–	BT_VDDO
BT_PCM_OUT	I/O	Y	Input; NoPull (Note 4)	Input; NoPull (Note 4)	High-Z, NoPull	Input, PD	Input, PD	–	BT_VDDO
BT_PCM_SYNC	I/O	Y	Input; NoPull (Note 4)	Input; NoPull (Note 4)	High-Z, NoPull	Input, PD	Input, PD	–	BT_VDDO
BT_I2S_WS	I/O	Y	Input; NoPull (Note 5)	Input; NoPull (Note 5)	High-Z, NoPull	Input, PD	Input, PD	–	BT_VDDO
BT_I2S_CLK	I/O	Y	Input; NoPull (Note 5)	Input; NoPull (Note 5)	High-Z, NoPull	Input, PD	Input, PD	–	BT_VDDO
BT_I2S_DO	I/O	Y	Input; NoPull (Note 5)	Input; NoPull (Note 5)	High-Z, NoPull	Input, PD	Input, PD	–	BT_VDDO
JTAG_SEL	I	Y	PD	PD	PD	PD	PD	PD	WL_VDDIO
GPIO_0	I/O	Y	PD	PD	NoPull	PD	PD	PD	WL_VDDIO
GPIO_1	I/O	Y	NoPull	NoPull	NoPull	NoPull	NoPull	NoPull	WL_VDDIO
GPIO_2	I/O	Y	PU	PU	NoPull	PU	PU	PU	WL_VDDIO
GPIO_3	I/O	Y	JTAG_SEL = 1 PU; jtag_sel=0 PD	jtag_sel=1 PU; jtag_sel=0 PD	NoPull	jtag_sel=1 PU; jtag_sel=0 PD	jtag_sel=1 PU; jtag_sel=0 PD	jtag_sel = 1 PU; jtag_sel = 0 PD	WL_VDDIO

Table 20. I/O States (Cont.)

Name	*I/O*	*Keeper*	*Active Mode*	*Low Power State/ Sleep (All Power Present)*	*Power-down (BT_REG_ON and WL_REG_ON Held Low)*	*Out-of-Reset; Before SW Download (BT_REG_ON=1; WL_REG_ON=1)*	*(WL_REG_ON=1 and BT_REG_ON=0) and VDDIOs Are Present*	*(WL_REG_ON=0 and BT_REG_ON=1) and VDDIOs Are Present*	*Power Rail*
GPIO_4	I/O	Y	jtag_sel=1 PU; jtag_sel=0 PD	jtag_sel=1 PU; jtag_sel=0 PD	NoPull	jtag_sel=1 PU; jtag_sel=0 PD	jtag_sel=1 PU; jtag_sel=0 PD	jtag_sel = 1 PU; jtag_sel = 0 PD	WL_VDDIO
GPIO_5	I/O	Y	NoPull	NoPull	NoPull	NoPull	NoPull	NoPull	WL_VDDIO
GPIO_6	I/O	Y	PD	PD	NoPull	PD	PD	PD	WL_VDDIO
GPIO_12	I/O	Y	jtag_sel=1 PU; jtag_sel=0 PD	jtag_sel=1 PU; jtag_sel=0 PD	NoPull	jtag_sel=1 PU; jtag_sel=0 PD	jtag_sel=1 PU; jtag_sel=0 PD	PU	WL_VDDIO

1. Keeper column: N=pad has no keeper. Y=pad has a keeper. Keeper is always active except in Power-down state.
2. If there is no keeper, and it is an input and there is Nopull, then the pad should be driven to prevent leakage due to floating pad (e.g., SDIO_CLK).
3. In the Power-down state (xx_REG_ON=0): High-Z; NoPull => the pad is disabled because power is not supplied.
4. Depending on whether the PCM interface is enabled and the configuration of PCM is in master or slave mode, it can be either output or input.
5. Depending on whether the I^2S interface is enabled and the configuration of I^2S is in master or slave mode, it can be either output or input.
6. GPIO_6 is input-only during the Low-Power and Deep-Sleep modes.
7. GPIO_0 through GPIO_5 and GPIO_12 can be configured to operate as inputs or outputs in Deep-Sleep mode before entering the mode.
8. The GPIO pull states for the Active and Low-Power states are hardware defaults. They can all be subsequently programmed as pull-ups or pull-downs.
9. Regarding GPIO pins, the following are the pull-up and pull-down values for both 3.3V and 1.8V VDDIO:

	Minimum (kΩ)	Typical (kΩ)	Maximum (kΩ)
3.3V VDDIO, Pull-downs:	51.5	44.5	38
3.3V VDDIO, Pull-ups:	37.4	39.5	44.5
1.8V VDDIO, Pull-downs:	64	83	116
1.8V VDDIO, Pull-ups:	65	86	118

13. DC Characteristics

Note: Values in this data sheet are design goals and are subject to change based on the results of device characterization.

13.1 Absolute Maximum Ratings

Caution! The absolute maximum ratings in Table 21 indicate levels where permanent damage to the device can occur, even if these limits are exceeded for only a brief duration. Functional operation is not guaranteed under these conditions. Operation at absolute maximum conditions for extended periods can adversely affect long-term reliability of the device.

Table 21. Absolute Maximum Ratings

Rating	Symbol	Value	Unit
DC supply for VBAT and PA driver supply:	VBAT	–0.5 to +6.0	V
DC supply voltage for digital I/O	VDDIO	–0.5 to 3.9	V
DC supply voltage for RF switch I/Os	VDDIO_RF	–0.5 to 3.9	V
DC input supply voltage for CLDO and LNLDO1	–	–0.5 to 1.575	V
DC supply voltage for RF analog	VDDRF	–0.5 to 1.32	V
DC supply voltage for core	VDDC	–0.5 to 1.32	V
WRF_TCXO_VDD	–	–0.5 to 3.63	V
Maximum undershoot voltage for I/O	$V_{undershoot}$	–0.5	V
Maximum overshoot voltage for I/O	$V_{overshoot}$	0.5	V
Maximum Junction Temperature	T_j	125	°C

13.2 Environmental Ratings

The environmental ratings are shown in Table 22.

Table 22. Environmental Ratings

Characteristic	Value	Units	Conditions/Comments
Ambient Temperature (T_A)	–30 to +85	°C	Functional operation[a]
Storage Temperature	–40 to +125	°C	–
Relative Humidity	Less than 60	%	Storage
	Less than 85	%	Operation

a.Functionality is guaranteed but specifications require derating at extreme temperatures; see the specification tables for details.

13.3 Electrostatic Discharge Specifications

Extreme caution must be exercised to prevent electrostatic discharge (ESD) damage. Proper use of wrist and heel grounding straps to discharge static electricity is required when handling these devices. Always store unused material in its antistatic packaging.

Table 23. ESD Specifications

Pin Type	Symbol	Condition	ESD Rating	Unit
ESD, Handling Reference: NQY00083, Section 3.4, Group D9, Table B	ESD_HAND_HBM	Human body model contact discharge per JEDEC EID/JESD22-A114	2000	V
Machine Model (MM)	ESD_HAND_MM	Machine model contact	100	V
CDM	ESD_HAND_CDM	Charged device model contact discharge per JEDEC EIA/JESD22-C101	500	V

13.4 Recommended Operating Conditions and DC Characteristics

Caution! Functional operation is not guaranteed outside of the limits shown in Table 24 and operation outside these limits for extended periods can adversely affect long-term reliability of the device.

Table 24. Recommended Operating Conditions and DC Characteristics

Parameter	Symbol	*Value*			Unit
		Minimum	Typical	Maximum	
DC supply voltage for VBAT	VBAT	2.9[a]	–	4.8[b]	V
DC supply voltage for core	VDD	1.14	1.2	1.26	V
DC supply voltage for RF blocks in chip	VDDRF	1.14	1.2	1.26	V
DC supply voltage for TCXO input buffer	WRF_TCXO_VDD	1.62	1.8	1.98	V
DC supply voltage for digital I/O	VDDIO, VDDIO_SD	1.71	–	3.63	V
DC supply voltage for RF switch I/Os	VDDIO_RF	3.13	3.3	3.46	V
Internal POR threshold	Vth_POR	0.4	–	0.7	V
SDIO Interface I/O Pins					
For VDDIO_SD = 1.8V:					
Input high voltage	VIH	1.27	–	–	V
Input low voltage	VIL	–	–	0.58	V
Output high voltage @ 2 mA	VOH	1.40	–	–	V
Output low voltage @ 2 mA	VOL	–	–	0.45	V
For VDDIO_SD = 3.3V:					
Input high voltage	VIH	0.625 × VDDIO	–	–	V
Input low voltage	VIL	–	–	0.25 × VDDIO	V
Output high voltage @ 2 mA	VOH	0.75 × VDDIO	–	-	V
Output low voltage @ 2 mA	VOL	–	–	0.125 × VDDIO	V

Table 24. Recommended Operating Conditions and DC Characteristics (Cont.)

Parameter	Symbol	Value			Unit
		Minimum	Typical	Maximum	
Other Digital I/O Pins					
For VDDIO = 1.8V:					
Input high voltage	VIH	0.65 × VDDIO	–	–	V
Input low voltage	VIL	-	–	0.35 × VDDIO	V
Output high voltage @ 2 mA	VOH	VDDIO – 0.45	–	–	V
Output low voltage @ 2 mA	VOL	–	–	0.45	V
For VDDIO = 3.3V:					
Input high voltage	VIH	2.00	–	–	V
Input low voltage	VIL	–	–	0.80	V
Output high voltage @ 2 mA	VOH	VDDIO – 0.4	–	–	V
Output low voltage @ 2 mA	VOL	–	–	0.40	V
RF Switch Control Output Pins[c]					
For VDDIO_RF = 3.3V:					
Output high voltage	VOH	VDDIO – 0.4	–	–	V
Output low voltage	VOL	–	–	0.40	V
Input capacitance	C_{IN}	–	–	5	pF

a. The CYW43340 is functional across this range of voltages. Optimal RF performance specified in the data sheet, however, is guaranteed only for 3.0V < VBAT < 4.8V.

b. The maximum continuous voltage is 4.8V. Voltages up to 5.5V for up to 10 seconds, cumulative duration, over the lifetime of the device are allowed. Voltages as high as 5.0V for up to 250 seconds, cumulative duration, over the lifetime of the device are allowed.

c. Programmable 2 mA to 16 mA drive strength. Default is 10 mA.

14. Bluetooth RF Specifications

Note: Values in this data sheet are design goals and are subject to change based on the results of device characterization.

Unless otherwise stated, limit values apply for the conditions specified in Table 22: “Environmental Ratings,” on page 57 and Table 24: “Recommended Operating Conditions and DC Characteristics,” on page 58. Typical values apply for the following conditions:

- VBAT = 3.6V
- Ambient temperature +25°C

Figure 28. RF Port Location for Bluetooth Testing

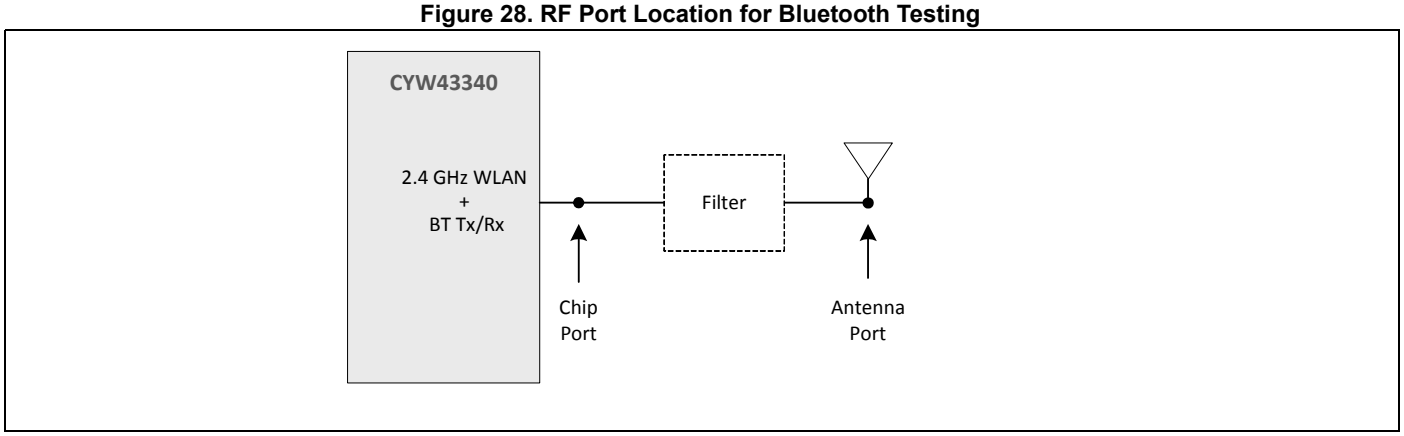

Note: All Bluetooth specifications are measured at the Chip port unless otherwise specified.

Table 25. Bluetooth Receiver RF Specifications

Parameter	Conditions	Minimum	Typical	Maximum	Unit
Note: The specifications in this table are measured at the Chip port output unless otherwise specified.					
General					
Frequency range	–	2402	–	2480	MHz
RX sensitivity	GFSK, 0.1% BER, 1 Mbps	–	–92.5	–	dBm
	π/4–DQPSK, 0.01% BER, 2 Mbps	–	–94.5	–	dBm
	8–DPSK, 0.01% BER, 3 Mbps	–	–88.5	–	dBm
Input IP3	–	–16	–	–	dBm
Maximum input at antenna	–	–	–	–20	dBm
Interference Performance[a]					
C/I co-channel	GFSK, 0.1% BER	–	–	11	dB
C/I 1-MHz adjacent channel	GFSK, 0.1% BER	–	–	0.0	dB
C/I 2-MHz adjacent channel	GFSK, 0.1% BER	–	–	–30	dB
C/I ≥ 3-MHz adjacent channel	GFSK, 0.1% BER	–	–	–40	dB
C/I image channel	GFSK, 0.1% BER	–	–	–9	dB
C/I 1-MHz adjacent to image channel	GFSK, 0.1% BER	–	–	–20	dB
C/I co-channel	π/4–DQPSK, 0.1% BER	–	–	13	dB
C/I 1-MHz adjacent channel	π/4–DQPSK, 0.1% BER	–	–	0.0	dB
C/I 2-MHz adjacent channel	π/4–DQPSK, 0.1% BER	–	–	–30	dB
C/I ≥ 3-MHz adjacent channel	π/4–DQPSK, 0.1% BER	–	–	–40	dB
C/I image channel	π/4–DQPSK, 0.1% BER	–	–	–7	dB
C/I 1-MHz adjacent to image channel	π/4–DQPSK, 0.1% BER	–	–	–20	dB
C/I co-channel	8–DPSK, 0.1% BER	–	–	21	dB
C/I 1 MHz adjacent channel	8–DPSK, 0.1% BER	–	–	5.0	dB
C/I 2 MHz adjacent channel	8–DPSK, 0.1% BER	–	–	–25	dB
C/I ≥ 3-MHz adjacent channel	8–DPSK, 0.1% BER	–	–	–33	dB
C/I Image channel	8–DPSK, 0.1% BER	–	–	0.0	dB
C/I 1-MHz adjacent to image channel	8–DPSK, 0.1% BER	–	–	–13	dB
Out-of-Band Blocking Performance (CW)					
30–2000 MHz	0.1% BER	–	–10.0	–	dBm
2000–2399 MHz	0.1% BER	–	–27	–	dBm
2498–3000 MHz	0.1% BER	–	–27	–	dBm
3000 MHz–12.75 GHz	0.1% BER	–	–10.0	–	dBm
Out-of-Band Blocking Performance, Modulated Interferer (LTE)					
GFSK (1 Mbps)					
2310Mhz	LTE band40 TDD 20M BW	–	–20	–	dBm
2330MHz	LTE band40 TDD 20M BW	–	–21	–	dBm
2350MHz	LTE band40 TDD 20M BW	–	–22	–	dBm
2370MHz	LTE band40 TDD 20M BW	–	–23	–	dBm

Table 25. Bluetooth Receiver RF Specifications (Cont.)

Parameter	Conditions	Minimum	Typical	Maximum	Unit
2510MHz	LTE band7 FDD 20M BW	–	–26	–	dBm
2530MHz	LTE band7 FDD 20M BW	–	–25	–	dBm
2550MHz	LTE band7 FDD 20M BW	–	–25	–	dBm
2570MHz	LTE band7 FDD 20M BW	–	–24	–	dBm
π/4 DPSK (2 Mbps)					
2310Mhz	LTE band40 TDD 20M BW	–	–20	–	dBm
2330MHz	LTE band40 TDD 20M BW	–	–20	–	dBm
2350MHz	LTE band40 TDD 20M BW	–	–22	–	dBm
2370MHz	LTE band40 TDD 20M BW	–	–23	–	dBm
2510MHz	LTE band7 FDD 20M BW	–	–26	–	dBm
2530MHz	LTE band7 FDD 20M BW	–	–25	–	dBm
2550MHz	LTE band7 FDD 20M BW	–	–25	–	dBm
2570MHz	LTE band7 FDD 20M BW	–	–24	–	dBm
8DPSK (3 Mbps)					
2310Mhz	LTE band40 TDD 20M BW	–	–21	–	dBm
2330MHz	LTE band40 TDD 20M BW	–	–21	–	dBm
2350MHz	LTE band40 TDD 20M BW	–	–23	–	dBm
2370MHz	LTE band40 TDD 20M BW	–	–24	–	dBm
2510MHz	LTE band7 FDD 20M BW	–	–26	–	dBm
2530MHz	LTE band7 FDD 20M BW	–	–25	–	dBm
2550MHz	LTE band7 FDD 20M BW	–	–25	–	dBm
2570MHz	LTE band7 FDD 20M BW	–	–24	–	dBm
Out-of-Band Blocking Performance, Modulated Interferer (Non-LTE)					
GFSK (1 Mbps)[a]					
698–716 MHz	WCDMA	–	–13	–	dBm
776–849 MHz	WCDMA	–	–13	–	dBm
824–849 MHz	GSM850	–	–13	–	dBm
824–849 MHz	WCDMA	–	–13	–	dBm
880–915 MHz	E-GSM	–	–13	–	dBm
880–915 MHz	WCDMA	–	–13	–	dBm
1710–1785 MHz	GSM1800	–	–19	–	dBm
1710–1785 MHz	WCDMA	–	–19	–	dBm
1850–1910 MHz	GSM1900	–	–20	–	dBm
1850–1910 MHz	WCDMA	–	–20	–	dBm
1880–1920 MHz	TD-SCDMA	–	–20	–	dBm
1920–1980 MHz	WCDMA	–	–20	–	dBm
2010–2025 MHz	TD–SCDMA	–	–21	–	dBm
2500–2570 MHz	WCDMA	–	–23	–	dBm

Table 25. Bluetooth Receiver RF Specifications (Cont.)

Parameter	Conditions	Minimum	Typical	Maximum	Unit
π/4 DPSK (2 Mbps)[a]					
698–716 MHz	WCDMA	–	–11	–	dBm
776–794 MHz	WCDMA	–	–11	–	dBm
824–849 MHz	GSM850	–	–12	–	dBm
824–849 MHz	WCDMA	–	–12	–	dBm
880–915 MHz	E-GSM	–	–12	–	dBm
880–915 MHz	WCDMA	–	–12	–	dBm
1710–1785 MHz	GSM1800	–	–17	–	dBm
1710–1785 MHz	WCDMA	–	–17	–	dBm
1850–1910 MHz	GSM1900	–	–19	–	dBm
1850–1910 MHz	WCDMA	–	–18	–	dBm
1880–1920 MHz	TD-SCDMA	–	–19	–	dBm
1920–1980 MHz	WCDMA	–	–19	–	dBm
2010–2025 MHz	TD-SCDMA	–	–21	–	dBm
2500–2570 MHz	WCDMA	–	–23	–	dBm
8DPSK (3 Mbps)[a]					
698–716 MHz	WCDMA	–	–13	–	dBm
776–794 MHz	WCDMA	–	–12	–	dBm
824–849 MHz	GSM850	–	–13	–	dBm
824–849 MHz	WCDMA	–	–13	–	dBm
880–915 MHz	E-GSM	–	–13	–	dBm
880–915 MHz	WCDMA	–	–13	–	dBm
1710–1785 MHz	GSM1800	–	–18	–	dBm
1710–1785 MHz	WCDMA	–	–18	–	dBm
1850–1910 MHz	GSM1900	–	–20	–	dBm
1850–1910 MHz	WCDMA	–	–19	–	dBm
1880–1920 MHz	TD-SCDMA	–	–20	–	dBm
1920–1980 MHz	WCDMA	–	–20	–	dBm
2010–2025 MHz	TD-SCDMA	–	–21	–	dBm
2500–2570 MHz	WCDMA	–	–24	–	dBm
RX LO Leakage					
2.4 GHz band	–	–	–90.0	–80.0	dBm
Spurious Emissions					
30 MHz–1 GHz		–	–95	–62	dBm
1–12.75 GHz		–	–70	–47	dBm
869–894 MHz		–	–147	–	dBm/Hz
925–960 MHz		–	–147	–	dBm/Hz
1805–1880 MHz		–	–147	–	dBm/Hz
1930–1990 MHz		–	–147	–	dBm/Hz

Table 25. Bluetooth Receiver RF Specifications (Cont.)

Parameter	Conditions	Minimum	Typical	Maximum	Unit
2110–2170 MHz		–	–147	–	dBm/Hz

a. The Bluetooth reference level for the required signal at the Bluetooth chip port is 3 dB higher than the typical sensitivity level.

Table 26. Bluetooth Transmitter RF Specifications[a]

Parameter	Conditions	Minimum	Typical	Maximum	Unit
General					
Frequency range		2402	–	2480	MHz
Basic rate (GFSK) TX power at Bluetooth		–	11.0	–	dBm
QPSK TX Power at Bluetooth		–	8.0	–	dBm
8PSK TX Power at Bluetooth		–	8.0	–	dBm
Power control step		2	4	8	dB
GFSK In-Band Spurious Emissions					
–20 dBc BW	–	–	.93	1	MHz
EDR In-Band Spurious Emissions					
1.0 MHz < |M – N| < 1.5 MHz	M – N = the frequency range for which the spurious emission is measured relative to the transmit center frequency.	–	–38	–26.0	dBc
1.5 MHz < |M – N| < 2.5 MHz		–	–31	–20.0	dBm
|M – N| ≥ 2.5 MHz[b]		–	–43	–40.0	dBm
Out-of-Band Spurious Emissions					
30 MHz to 1 GHz	–	–	–	–36.0 [c,d]	dBm
1 GHz to 12.75 GHz	–	–	–	–30.0 [d,e,f]	dBm
1.8 GHz to 1.9 GHz	–	–	–	–47.0	dBm
5.15 GHz to 5.3 GHz	–	–	–	–47.0	dBm
GPS Band Spurious Emissions					
Spurious emissions	–	–	–103	–	dBm
Out-of-Band Noise Floor[g]					
65–108 MHz	FM RX	–	–147	–	dBm/Hz
776–794 MHz	CDMA2000	–	–147	–	dBm/Hz
869–960 MHz	cdmaOne, GSM850	–	–147	–	dBm/Hz
925–960 MHz	E-GSM	–	–147	–	dBm/Hz
1570–1580 MHz	GPS	–	–146	–	dBm/Hz
1805–1880 MHz	GSM1800	–	–145	–	dBm/Hz
1930–1990 MHz	GSM1900, cdmaOne, WCDMA	–	–144	–	dBm/Hz
2110–2170 MHz	WCDMA	–	–141	–	dBm/Hz

a. Unless otherwise specified, the specifications in this table are measured at the chip output port, and output power specifications are with the temperature correction algorithm and TSSI enabled.

b. Typically measured at an offset of ±3 MHz.

c. The maximum value represents the value required for Bluetooth qualification as defined in the v4.0 specification.

d. The spurious emissions during Idle mode are the same as specified in Table 26 on page 65.

e. Specified at the Bluetooth Antenna port.

f. Meets this specification using a front-end band-pass filter.

g. Transmitted power in cellular and FM bands at the Bluetooth Antenna port. See Figure 28 on page 60 for location of the port.

Table 27. Local Oscillator Performance

Parameter	Minimum	Typical	Maximum	Unit
LO Performance				
Lock time	–	72	–	µs
Initial carrier frequency tolerance	–	±25	±75	kHz
Frequency Drift				
DH1 packet	–	±8	±25	kHz
DH3 packet	–	±8	±40	kHz
DH5 packet	–	±8	±40	kHz
Drift rate	–	5	20	kHz/50 µs
Frequency Deviation				
00001111 sequence in payload[a]	140	155	175	kHz
10101010 sequence in payload[b]	115	140	–	kHz
Channel spacing	–	1	–	MHz

a. This pattern represents an average deviation in payload.
b. Pattern represents the maximum deviation in payload for 99.9% of all frequency deviations.

Table 28. BLE RF Specifications

Parameter	Conditions	Minimum	Typical	Maximum	Unit
Frequency range	–	2402		2480	MHz
RX sense[a]	GFSK, 0.1% BER, 1 Mbps	–	–94.5	–	dBm
TX power[b]	–	–	8.5	–	dBm
Mod Char: delta f1 average	–	225	255	275	kHz
Mod Char: delta f2 max[c]	–	99.9	–	–	%
Mod Char: ratio	–	0.8	0.95	–	%

a.The Bluetooth tester is set so that Dirty TX is on.

b.BLE TX power can be increased to compensate for front-end losses such as BPF, diplexer, switch, and so forth). The output is capped at 12 dBm out. The BLE TX power at the antenna port cannot exceed the 10 dBm specification limit.

c.At least 99.9% of all delta F2 max frequency values recorded over 10 packets must be greater than 185 kHz.

15. WLAN RF Specifications

15.1 Introduction

The CYW43340 includes an integrated dual-band direct conversion radio that supports either the 2.4 GHz band or the 5 GHz band. The CYW43340 does not provide simultaneous 2.4 GHz and 5 GHz operation. This section describes the RF characteristics of the 2.4 GHz and 5 GHz portions of the radio.

Values in this data sheet are design goals and are subject to change based on the results of device characterization.

Unless otherwise stated, limit values apply for the conditions specified inTable 22: “Environmental Ratings,” on page 57 and Table 24: “Recommended Operating Conditions and DC Characteristics,” on page 58. Typical values apply for the following conditions:

- VBAT = 3.6V
- Ambient temperature +25°C

Figure 29. WLAN Port Locations (5 GHz)

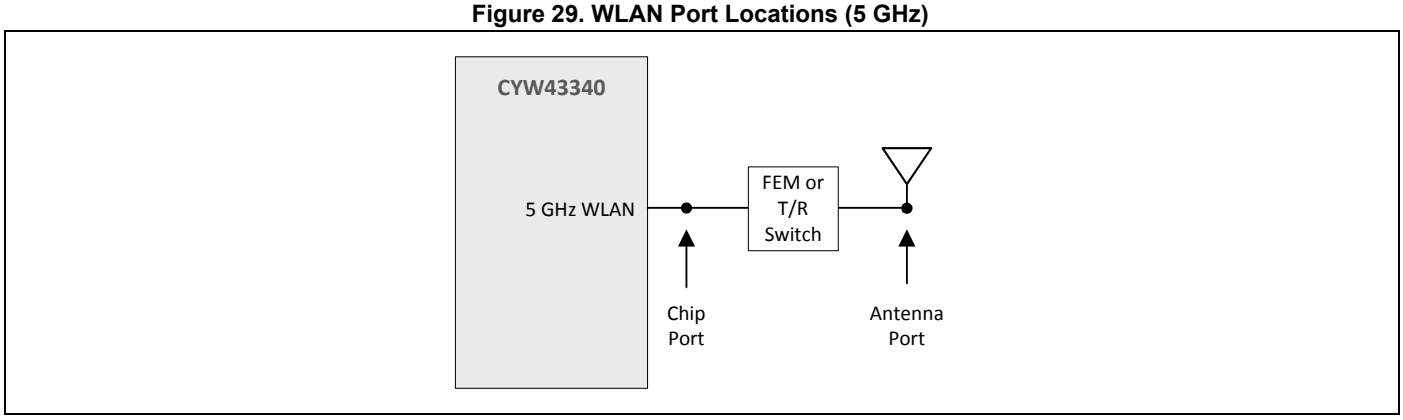

Figure 30. WLAN Port Locations (2.4 GHz)

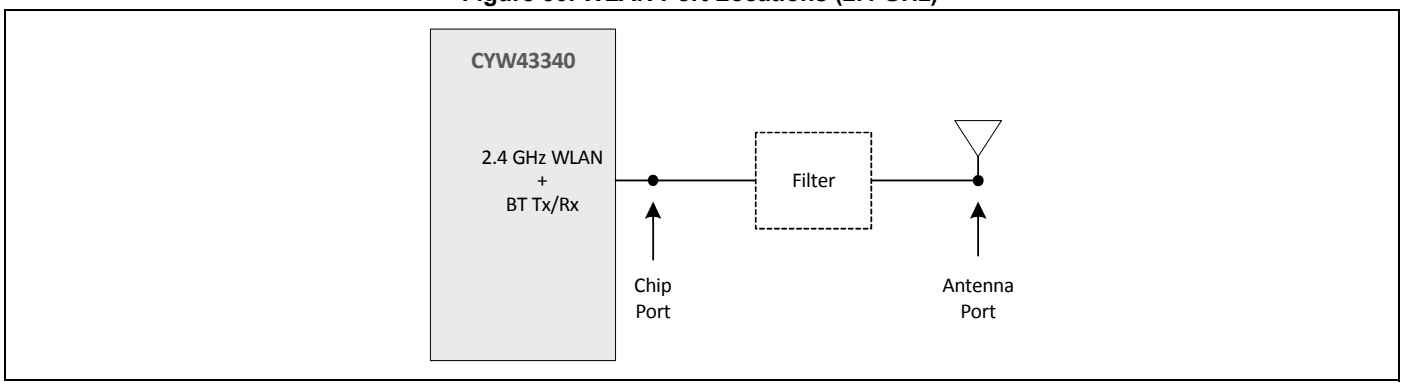

Note: All WLAN specifications are measured at the chip port, unless otherwise specified.

15.2 2.4 GHz Band General RF Specifications

Table 29. 2.4 GHz Band General RF Specifications

Item	Condition	Minimum	Typical	Maximum	Unit
TX/RX switch time	Including TX ramp down	–	–	5	µs
RX/TX switch time	Including TX ramp up	–	–	2	µs
Power-up and power-down ramp time	DSSS/CCK modulations	–	–	< 2	µs

15.3 WLAN 2.4 GHz Receiver Performance Specifications

Note: The specifications in Table 30 are measured at the chip port, unless otherwise specified.

Table 30. WLAN 2.4 GHz Receiver Performance Specifications

Parameter	Condition/Notes	Minimum	Typical	Maximum	Unit
Frequency range	–	2400	–	2500	MHz
RX sensitivity (8% PER for 1024 octet PSDU)[a]	1 Mbps DSSS	–	–99	–	dBm
	2 Mbps DSSS	–	–95	–	dBm
	5.5 Mbps CCK	–	–93	–	dBm
	11 Mbps CCK	–	–89	–	dBm
RX sensitivity (10% PER for 1024 octet PSDU)[a]	6 Mbps OFDM	–	–92	–	dBm
	9 Mbps OFDM	–	–92	–	dBm
	12 Mbps OFDM	–	–89	–	dBm
	18 Mbps OFDM	–	–87	–	dBm
	24 Mbps OFDM	–	–84	–	dBm
	36 Mbps OFDM	–	–82	–	dBm
	48 Mbps OFDM	–	–78	–	dBm
	54 Mbps OFDM	–	–77	–	dBm
RX sensitivity (10% PER for 4096 octet PSDU)[a,b.] Defined for default parameters: GF, 800 ns GI, and non-STBC.	20 MHz channel spacing for all MCS rates	(GF)			
	MCS0	–	–92	–	dBm
	13 Mbps MCS 1	–	–88	–	dBm
	6.5 Mbps MCS 2	–	–86	–	dBm
	MCS 3	–	–84	–	dBm
	MCS 4	–	–81	–	dBm
	MCS 5	–	–76	–	dBm
	MCS 6	–	–75	–	dBm
	MCS 7	–	–73	–	dBm

Table 30. WLAN 2.4 GHz Receiver Performance Specifications (Cont.)

Parameter	Condition/Notes	Minimum	Typical	Maximum	Unit
RX sensitivity (10% PER for 4096 octet PSDU)[a,b.] Defined for default parameters: GF, 800 ns GI, and non-STBC.	40 MHz channel spacing for all MCS rates	(GF)			
	MCS 0	–	–89	–	dBm
	MCS 1	–	–85	–	dBm
	MCS 2	–	–83	–	dBm
	MCS 3	–	–81	–	dBm
	MCS 4	–	–78	–	dBm
	MCS 5	–	–74	–	dBm
	MCS 6	–	–71	–	dBm
	MCS 7	–	–69	–	dBm
RX sensitivity (10% PER for 4096 octet PSDU)[a,c.] Defined for default parameters: Mixed mode, 800 ns GI, and non-STBC.	20 MHz channel spacing for all MCS rates (Mixed mode)				
	MCS0	–	–91.0	–	dBm
	MCS 1	–	–87.9	–	dBm
	MCS 2	–	–85.5	–	dBm
	MCS 3	–	–82.8	–	dBm
	MCS 4	–	–79.9	–	dBm
	MCS 5	–	–76.2	–	dBm
	MCS 6	–	–74.6	–	dBm
	MCS 7	–	–72.6	–	dBm
RX sensitivity (10% PER for 4096 octet PSDU)[a,b.] Defined for default parameters: Mixed mode, 800 ns GI, and non-STBC.	40 MHz channel spacing for all MCS rates (Mixed mode)				
	MCS 0	–	–89.0	–	dBm
	MCS 1	–	–85.4	–	dBm
	MCS 2	–	–83.2	–	dBm
	MCS 3	–	–80.6	–	dBm
	MCS 4	–	–77.4	–	dBm
	MCS 5	–	–72.3	–	dBm
	MCS 6	–	–70.6	–	dBm
	MCS 7	–	–69.0	–	dBm

Table 30. WLAN 2.4 GHz Receiver Performance Specifications (Cont.)

Parameter	Condition/Notes		Minimum	Typical	Maximum	Unit
Blocking level for 3dB RX sensitivity degradation (without external filtering)[d]	776–794 MHz	CDMA2000	–12.3	–	–	dBm
	824–849 MHz[e]	cdmaOne	–9.4	–	–	dBm
	824–849 MHz	GSM850	–2.7	–	–	dBm
	880–915 MHz	E-GSM	–3.4	–	–	dBm
	1710–1785 MHz	GSM1800	–9	–	–	dBm
	1850–1910 MHz	GSM1800	–8.8	–	–	dBm
	1850–1910 MHz	cdmaOne	–22.4	–	–	dBm
	1850–1910 MHz	WCDMA	–18.6	–	–	dBm
	1920–1980 MHz	WCDMA	–22.5	–	–	dBm
	2496–2690 MHz	LTE + 3 dB desense	–37.2	–	–	dBm
	2300–2400 MHz	LTE + 3 dB desense	–37.2	–	–	dBm
	2300–2370 MHz	LTE + 3 dB desense	–37.2	–	–	dBm
	2570–2620 MHz	LTE + 3 dB desense	–37.2	–	–	dBm
	2545–2575 MHz	LTE + 3 dB desense	–37.2	–	–	dBm
In-band static CW jammer immunity (fc – 8 MHz < fcw < + 8 MHz)	RX PER < 1%, 54 Mbps OFDM, 1000 octet PSDU for: (RxSens + 23 dB < Rxlevel < max input level)		–80	–	–	dBm
Input In-Band IP3[a]	Maximum LNA gain		–	–15.5	–	dBm
	Minimum LNA gain		–	–1.5	–	dBm
Maximum Receive Level @ 2.4 GHz	@ 1, 2 Mbps (8% PER, 1024 octets)		–3.5	–	–	dBm
	@ 5.5, 11 Mbps (8% PER, 1024 octets)		–9.5	–	–	dBm
	@ 6–54 Mbps (10% PER, 1024 octets)		–19.5	–	–	dBm
	@ MCS0–7 rates (10% PER, 4095 octets)		–19.5	–	–	dBm
LPF 3 dB Bandwidth	–		9	–	10	MHz
Adjacent channel rejection-DSSS (Difference between interfering and desired signal at 8% PER for 1024 octet PSDU with desired signal level as specified in Condition/Notes)	**Desired and interfering signal 30 MHz apart**					
	1 Mbps DSSS	–74 dBm	35	–	–	dB
	2 Mbps DSSS	–74 dBm	35	–	–	dB
	Desired and interfering signal 25 MHz apart					
	5.5 Mbps DSSS	–70 dBm	35	–	–	dB
	11 Mbps DSSS	–70 dBm	35	–	–	dB
Adjacent channel rejection-OFDM (Difference between interfering and desired signal (25 MHz apart) at 10% PER for 1024 octet PSDU with desired signal level as specified in Condition/Notes)	6 Mbps OFDM	–79 dBm	16	–	–	dB
	9 Mbps OFDM	–78 dBm	15	–	–	dB
	12 Mbps OFDM	–76 dBm	13	–	–	dB
	18 Mbps OFDM	–74 dBm	11	–	–	dB
	24 Mbps OFDM	–71 dBm	8	–	–	dB
	36 Mbps OFDM	–67 dBm	4	–	–	dB
	48 Mbps OFDM	–63 dBm	0	–	–	dB
	54 Mbps OFDM	–62 dBm	–1	–	–	dB

Table 30. WLAN 2.4 GHz Receiver Performance Specifications (Cont.)

Parameter	Condition/Notes		Minimum	Typical	Maximum	Unit
Adjacent channel rejection MCS0–7 (Difference between interfering and desired signal (25 MHz apart) at 10% PER for 4096 octet PSDU with desired signal level as specified in Condition/Notes)	MCS7	–61 dBm	–2	–	–	dB
	MCS6	–62 dBm	–1	–	–	dB
	MCS5	–63 dBm	0	–	–	dB
	MCS4	–67 dBm	4	–	–	dB
	MCS3	–71 dBm	8	–	–	dB
	MCS2	–74 dBm	11	–	–	dB
	MCS1	–76 dBm	13	–	–	dB
	MCS0	–79 dBm	16	–	–	dB
Maximum receiver gain	–	–	–	105	–	dB
Gain control step	–	–	–	3	–	dB
RSSI accuracy[f]	Range –98 dBm to –30 dBm		–5	–	5	dB
	Range above –30 dBm		–8	–	8	dB
Return loss	Z_o = 50Ω, across the dynamic range		6	10	–	dB
Receiver cascaded NF	At maximum gain		–	3.5	–	

a.Derate by 1.5 dB for –30 °C to –10°C and 55°C to 85°C.

b.Sensitivity degradations for alternate settings in MCS modes. MM: 0.5 dB drop, SGI: 2 dB drop, and STBC: 0.75 dB drop.

c.Sensitivity degradations for alternate settings in MCS modes. MM: 0.5 dB drop, SGI: 2 dB drop, and STBC: 0.75 dB drop.

d.The cellular standard listed for each band indicates the type of modulation used to generate the interfering signal in that band for the purpose of this test. It is not intended to indicate any specific usage of each band in any specific country.

e.The blocking levels are valid for channels 1 to 11. (For higher channels, the performance may be lower due to third harmonic signals (3 × 824 MHz) falling within band.)

f.The minimum and maximum values shown have a 95% confidence level.

15.4 WLAN 2.4 GHz Transmitter Performance Specifications

Note: The specifications in Table 31 are measured at the chip port output, unless otherwise specified.

Table 31. WLAN 2.4 GHz Transmitter Performance Specifications

Parameter	Condition/Notes		Minimum	Typical	Maximum	Unit
Frequency range	–		2400	–	2500	MHz
Transmitted power in cellular and FM bands (–18 dBm at the antenna port, 90% duty cycle, OFDM)[a]	76–108 MHz	FM RX	–	–166	–	dBm/Hz
	776–794 MHz	CDMA2000	–	–166	–	dBm/Hz
	869–960 MHz	cdmaOne, GSM850	–	–165	–	dBm/Hz
	925–960 MHz	E-GSM	–	–165	–	dBm/Hz
	1570–1580 MHz	GPS	–	–155	–	dBm/Hz
	1805–1880 MHz	GSM1800	–	–147	–	dBm/Hz
	1930–1990 MHz	GSM1900, cdmaOne, WCDMA	–	–141	–	dBm/Hz
	2010–2170 MHz	WCDMA	–	–138	–	dBm/Hz
	2400–2483 MHz	BT/WLAN	–	–	–	dBm/Hz
	2.4 GHz	GPS/GLONASS	–	–147	–	dBm/MHz
	2.4 GHz	2170 MHz band	–	–131		dBm/MHz
	2.4 GHz	LTE Band 40	–	–109		dBm/Hz
	2.4 GHz	LTE Band 7	–	–121		dBm/Hz
	2.4 GHz	LTE Band 38	–	–115		dBm/Hz
	2.4 GHz	LTE Band 41	–	–104		dBm/Hz
	2.4 GHz	LTE Band XGP	–	–110		dBm/Hz
Harmonic level (at 18 dBm with 100% duty cycle)	4.8–5.0 GHz	2nd harmonic	–	–	–48.4	dBm/1 MHz
	7.2–7.5 GHz	3rd harmonic	–	–	–56.9	dBm/1 MHz
TX power at chip port for highest power level setting at 25°C, VBAT = 3.6V, spectral mask and EVM compliance[b]	1 Mbps DSSS	0 dBm	–	20	–	dBm
	6 Mbps	–3 dBm	–	19.5	–	dBm
	54 Mbps	–6 dBm	–	18	–	dBm
	MCS7 (20 MHz)		–	16.5	–	dBm
	MCS7 (40 MHz)		–	16.5	–	dBm
	MCS7 (20 MHz, SGI)		–	16.5	–	dBm
	MCS7 (40 MHz, SGI)		–	16.5	–	dBm
Phase noise	37.4 MHz Crystal, Integrated from 10 kHz to 10 MHz		–	0.5	–	Degrees
TX power control dynamic range	–		30	–	–	dB
Carrier suppression	–		15	–	–	dBc
Gain control step	–		–	0.25	–	dB
Return loss at Chip port TX	Z_o = 50Ω		4	6	–	dB

a. The cellular standards listed indicate only typical usages of that band in some countries. Other standards may also be used within those bands.

b. Derate by 2 dB for –30°C to –10°C and 55°C to 85°C.

15.5 WLAN 5 GHz Receiver Performance Specifications

Note: The specifications in Table 32 are measured at the chip port input, unless otherwise specified.

Table 32. WLAN 5 GHz Receiver Performance Specifications

Parameter	Condition/Notes	Minimum	Typical	Maximum	Unit
Frequency range	–	4900	–	5845	MHz
RX sensitivity (10% PER for 1000 octet PSDU)[a]	6 Mbps OFDM	–	–90.5	–	dBm
	9 Mbps OFDM	–	–90.5	–	dBm
	12 Mbps OFDM	–	–87.5	–	dBm
	18 Mbps OFDM	–	–85.5	–	dBm
	24 Mbps OFDM	–	–82.5	–	dBm
	36 Mbps OFDM	–	–80.5	–	dBm
	48 Mbps OFDM	–	–76.5	–	dBm
	54 Mbps OFDM	–	–73.5	–	dBm
RX sensitivity (10% PER for 4096 octet PSDU)[a] Defined for default parameters: GF, 800 ns GI, and non-STBC.	20 MHz channel spacing for all MCS rates (GF)				
	MCS 0	–	–90.5	–	dBm
	MCS 1	–	–86.5	–	dBm
	MCS 2	–	–84.5	–	dBm
	MCS 3	–	–82.5	–	dBm
	MCS 4	–	–78.5	–	dBm
	MCS 5	–	–73.5	–	dBm
	MCS 6	–	–71.5	–	dBm
	MCS 7	–	–70.5	–	dBm
RX sensitivity (10% PER for 4096 octet PSDU)[a] Defined for default parameters: GF, 800 ns GI, and non-STBC.	40 MHz channel spacing for all MCS rates (GF)				
	MCS 0	–	–87.5	–	dBm
	MCS 1	–	–84.5	–	dBm
	MCS 2	–	–81.5	–	dBm
	MCS 3	–	–80.5	–	dBm
	MCS 4	–	–76.5	–	dBm
	MCS 5	–	–71.5	–	dBm
	MCS 6	–	–69.5	–	dBm
	MCS 7	–	–68.5	–	dBm
RX sensitivity (10% PER for 4096 octet PSDU)[a] Defined for default parameters: Mixed mode, 800 ns GI, and non-STBC.	20 MHz channel spacing for all MCS rates (Mixed mode)				
	MCS 0	–	–89.5	–	dBm
	MCS 1	–	–86.4	–	dBm
	MCS 2	–	–84.0	–	dBm
	MCS 3	–	–81.3	–	dBm
	MCS 4	–	–78.4	–	dBm
	MCS 5	–	–74.7	–	dBm
	MCS 6	–	–73.1	–	dBm
	MCS 7	–	–71.1	–	dBm

Table 32. WLAN 5 GHz Receiver Performance Specifications (Cont.)

Parameter	Condition/Notes		Minimum	Typical	Maximum	Unit
RX sensitivity (10% PER for 4096 octet PSDU)[a] Defined for default parameters: Mixed mode, 800 ns GI, and non-STBC.	40 MHz channel spacing for all MCS rates (Mixed mode)					
	MCS 0		–	–87.5	–	dBm
	MCS 1		–	–83.9	–	dBm
	MCS 2		–	–81.7	–	dBm
	MCS 3		–	–79.1	–	dBm
	MCS 4		–	–75.9	–	dBm
	MCS 5		–	–70.8	–	dBm
	MCS 6		–	–69.1	–	dBm
	MCS 7		–	–67.5	–	dBm
Blocking level for 1 dB RX sensitivity degradation (without external filtering)[b]	776–794 MHz	CDMA2000	–21	–	–	dBm
	824–849 MHz	cdmaOne	–20	–	–	dBm
	824–849 MHz	GSM850	–12	–	–	dBm
	880–915 MHz	E-GSM	–12	–	–	dBm
	1710–1785 MHz	GSM1800	–15	–	–	dBm
	1850–1910 MHz	GSM1800	–15	–	–	dBm
	1850–1910 MHz	cdmaOne	–20	–	–	dBm
	1850–1910 MHz	WCDMA	–24	–	–	dBm
	1920–1980 MHz	WCDMA	–24	–	–	dBm
Input In-Band IP3[a]	Maximum LNA gain		–	–15.5	–	dBm
	Minimum LNA gain		–	–1.5	–	dBm
Maximum receive level @ 5.24 GHz	@ 6, 9, 12 Mbps		–29.5	–	–	dBm
	@ 18, 24, 36, 48, 54 Mbps		–29.5	–	–	dBm
LPF 3 dB bandwidth	–		9	–	18	MHz
Adjacent channel rejection (Difference between interfering and desired signal (20 MHz apart) at 10% PER for 1000 octet PSDU with desired signal level as specified in Condition/ Notes)	6 Mbps OFDM	–79 dBm	16	–	–	dB
	9 Mbps OFDM	–78 dBm	15	–	–	dB
	12 Mbps OFDM	–76 dBm	13	–	–	dB
	18 Mbps OFDM	–74 dBm	11	–	–	dB
	24 Mbps OFDM	–71 dBm	8	–	–	dB
	36 Mbps OFDM	–67 dBm	4	–	–	dB
	48 Mbps OFDM	–63 dBm	0	–	–	dB
	54 Mbps OFDM	–62 dBm	–1	–	–	dB
	65 Mbps OFDM	–61 dBm	–2	–	–	dB

Table 32. WLAN 5 GHz Receiver Performance Specifications (Cont.)

Parameter	Condition/Notes		Minimum	Typical	Maximum	Unit
Alternate adjacent channel rejection (Difference between interfering and desired signal (40 MHz apart) at 10% PER for 1000[c] octet PSDU with desired signal level as specified in Condition/ Notes)	6 Mbps OFDM	–78.5 dBm	32	–	–	dB
	9 Mbps OFDM	–77.5 dBm	31	–	–	dB
	12 Mbps OFDM	–75.5 dBm	29	–	–	dB
	18 Mbps OFDM	–73.5 dBm	27	–	–	dB
	24 Mbps OFDM	–70.5 dBm	24	–	–	dB
	36 Mbps OFDM	–66.5 dBm	20	–	–	dB
	48 Mbps OFDM	–62.5 dBm	16	–	–	dB
	54 Mbps OFDM	–61.5 dBm	15	–	–	dB
	65 Mbps OFDM	–60.5 dBm	14	–	–	dB
Maximum receiver gain	–		–	100	–	dB
Gain control step	–		–	3	–	dB
RSSI accuracy[d]	Range –98 dBm to –30 dBm		–5	–	5	dB
	Range above –30 dBm		–8	–	8	dB
Return loss	Z_o = 50Ω		6	10	–	dB
Receiver cascaded noise figure	At maximum gain		–	5.0	–	dB

a.Derate by 1.5 dB for –30 °C to –10°C and 55°C to 85°C.

b.The cellular standard listed for each band indicates the type of modulation used to generate the interfering signal in that band for the purpose of this test. It is not intended to indicate any specific usage of each band in any specific country.

c.For 65 Mbps, the size is 4096.

d.The minimum and maximum values shown have a 95% confidence level.

15.6 WLAN 5 GHz Transmitter Performance Specifications

Note: The specifications in Table 33 are measured at the chip port, unless otherwise specified.

Table 33. WLAN 5 GHz Transmitter Performance Specifications

Parameter	Condition/Notes		Minimum	Typical	Maximum	Unit
Frequency range	–		4900	–	5845	MHz
Transmitted power in cellular and FM bands (–18 dBm at the antenna port, >90% duty cycle, OFDM)[a]	76–108 MHz	FM RX	–	< –168	–	dBm/Hz
	776–794 MHz	–	–	–168	–	dBm/Hz
	869–960 MHz	cdmaOne, GSM850	–	–170	–	dBm/Hz
	925–960 MHz	E-GSM	–	–170	–	dBm/Hz
	1570–1580 MHz	GPS	–	–168	–	dBm/Hz
	1805–1880 MHz	GSM1800	–	–169	–	dBm/Hz
	1930–1990 MHz	GSM1900, cdmaOne, WCDMA	–	–169	–	dBm/Hz
	2110–2170 MHz	WCDMA	–	–169	–	dBm/Hz
	2400–2483 MHz	BT/WLAN	–	–166	–	dBm/Hz
	2300–2690	LTE	–	–167	–	dBm/Hz
Harmonic level (at 17 dBm)	9.8–11.570 GHz	2nd harmonic	–	–48.6	–	dBm/MHz

Table 33. WLAN 5 GHz Transmitter Performance Specifications (Cont.)

Parameter	Condition/Notes	Minimum	Typical	Maximum	Unit
TX power at chip port for highest power level setting at 25°C, VBAT = 3.6V, spectral mask and EVM compliance[b]	6 Mbps	–	19	–	dBm
	54 Mbps	–	17	–	dBm
	MCS0 (20 MHz)	–	19.5	–	dBm
	MCS7 (20 MHz)	–	16.5	–	dBm
	MCS7 (40 MHz)	–	16.5	–	dBm
	MCS7 (20 MHz, SGI)	–	16.5	–	dBm
	MCS7 (40 MHz, SGI)	–	16.5	–	dBm
Phase noise	37.4 MHz crystal, Integrated from 10 kHz to 10 MHz	–	0.7	–	Degrees
TX power control dynamic range	–	30	–	–	dB
Carrier suppression	–	15	–	–	dBc
Gain control step	–	–	0.25	–	dB
Return loss	Z_o = 50Ω	–	6	–	dB

a.The cellular standards listed indicate only typical usages of that band in some countries. Other standards may also be used within those bands.

b.Derate by 2 dB for –30°C to –10°C and 55°C to 85°C.

15.7 General Spurious Emissions Specifications

Table 34. General Spurious Emissions Specifications

Parameter	Condition/Notes		Min	Typ	Max	Unit
Frequency range	–		2400	–	2500	MHz
General Spurious Emissions						
TX Emissions	30 MHz < f < 1 GHz	RBW = 100 kHz	–	–	–62	dBm
	1 GHz < f < 12.75 GHz	RBW = 1 MHz	–	–	–47	dBm
	1.8 GHz < f < 1.9 GHz	RBW = 1 MHz	–	–	–53	dBm
	5.15 GHz < f < 5.3 GHz	RBW = 1 MHz	–	–	–53	dBm
RX/standby Emissions	30 MHz < f < 1 GHz	RBW = 100 kHz	–	–78	–63	dBm
	1 GHz < f < 12.75 GHz	RBW = 1 MHz	–	–68.5[a]	–53	dBm
	1.8 GHz < f < 1.9 GHz	RBW = 1 MHz	–	–96	–53	dBm
	5.15 GHz < f < 5.3 GHz	RBW = 1 MHz	–	–96	–53	dBm

a.For frequencies other than 3.2 GHz, the emissions value is –96 dBm. The value presented in table is the result of LO leakage at 3.2 GHz.

16. Internal Regulator Electrical Specifications

Note: Values in this data sheet are design goals and are subject to change based on the results of device characterization.

Functional operation is not guaranteed outside of the specification limits provided in this section.

16.1 Core Buck Switching Regulator

Table 35. Core Buck Switching Regulator (CBUCK) Specifications

Specification	Notes	Min	Typ	Max	Units
Input supply voltage (DC), VBAT	DC voltage range inclusive of disturbances.	2.9	3.6	4.8[a]	V
PWM mode switching frequency, Fsw	Forced PWM without FLL enabled.	2.8	4	5.2	MHz
	Forced PWM with FLL enabled.	3.6	4	4.4	MHz
PWM output current	–	–	–	372[b]	mA
Output current limit	–	–	1390	–	mA
Output voltage range	Programmable, 30 mV steps. Default = 1.35V (bits = 0000).	1.2	1.35	1.5	Volts
PWM output voltage DC accuracy	Includes load and line regulation. Forced PWM mode.	–4	–	4	%
	Total DC accuracy after trim.	–2	–	2	%
PWM ripple voltage, static	Measure with 20 MHz BW limit. Static Load. Max ripple based on: VBAT < 4.8V, Vout = 1.35V, Fsw = 4 MHz, 2.2 µH inductor, L > 1.05 µH, capacitor + Board total-ESR < 20 mΩ, Cout > 1.9 µF, ESL < 200 pH.	–	7	20	mVpp
PWM mode peak efficiency (Peak efficiency is at 200 mA load. The following conditions apply to all inductor types: Forced PWM, 200 mA, Vout = 1.35V, VBAT = 3.6V, Fsw = 4 MHz, at 25°C.)	2.5 x 2 mm LQM2HPN2R2NG0, L = 2 µH, DCR = 80 mΩ ±25%, ACR < 1Ω.	79	85	–	%
	0805-size LQM21PN2R2NGC, L = 2.1 µH, DCR=230 mΩ ±25%, ACR < 2Ω.	78	84	–	%
	0603-size MIPSTZ1608D2R2B, L = 1 µH, DCR = 240 mΩ ±25%, ACR < 2Ω.	74	81	–	%
PFM mode efficiency	10 mA load current, Vout = 1.35V, VBAT = 3.6V, 20C Cap + Board total-ESR < 20 mΩ, Cout = 4.7 µF, ESL < 200 pH, FLL= OFF 0603-size MIPSTZ1608D2R2B, L = 2.2 µH, DCR = 240 mΩ ±25%, ACR < 2Ω.	67	77	–	%
LPOM efficiency	1 mA load current, Vout = 1.35V, VBAT = 3.6V, 20C Cap + board total-ESR < 20 mΩ, Cout = 4.7 µF, ESL < 200 pH, FLL = OFF 0603-size MIPSTZ1608D2R2B, L = 2.2 µH, DCR = 240Ω ±25%, ACR < 2Ω.	55	65	–	%
Start-up time from power down	VIO already on and steady. Time from REG_ON rising edge to CLDO reaching 1.2V. Includes 256 µsec typical Vddc_ok_o delay.	–	903	1106	µs

Table 35. Core Buck Switching Regulator (CBUCK) Specifications (Cont.)

Specification	Notes	Min	Typ	Max	Units
External inductor, L[c]	–	–	2.2	–	µH
External output capacitor, Cout[c]	Ceramic, X5R, 0402, ESR < 30 mΩ at 4 MHz, ±20%, 6.3V, 4.7 µF, Murata® GRM155R60J475M	2[d]	4.7	–	µF
External input capacitor, Cin[c]	For SR_VDDBATP5V pin. Ceramic, X5R, 0603, ESR < 30 mΩ at 4 MHz, ±20%, 6.3V, 4.7 µF, Murata GRM155R60J475M.	0.67[d]	4.7	–	µF
Input supply voltage ramp-up time	0 to 4.3V	40	–	100,000	µs

a.The maximum continuous voltage is 4.8V. Voltages up to 5.5V for up to 10 seconds, cumulative duration, over the lifetime of the device are allowed. Voltages as high as 5.0V for up to 250 seconds, cumulative duration, over the lifetime of the device are allowed.

b.At junction temperature 125°C.

c.Refer to *PCB Layout Guidelines and Component Selection for Optimized PMU Performance* (4334-AN200-R) for component selection details.

d.The minimum value refers to the residual capacitor value after taking into account part-to-part tolerance, DC-bias, temperature, and aging.

16.2 3.3V LDO (LDO3P3)

Table 36. LDO3P3 Specifications

Parameters	Conditions	Min.	Typ.	Max.	Units
Input supply voltage, Vin	Minimum = Vo+0.2V = 3.5V (for Vo = 3.3V) dropout voltage requirement must be met under max load for performance specs.	2.9	3.6	4.8	V
Nominal output voltage, Vo	Default = 3.3V	–	3.3	–	V
Output voltage programmability	Range Accuracy at any step (including Line/Load regulation), load > 0.1 mA	2.4 –5	–	3.4 +5	V %
Dropout voltage	At maximum load	–	–	200	mV
Output current	–	0.001	–	450	mA
Quiescent current	No load; Vin = Vo + 0.2V Maximum load @ 450mA; Vin = Vo + 0.2V	–	66 4	85 4.5	µA mA
Leakage current	Powerdown mode (at 85°C junction temperature)	–	1.5	5	µA
Line regulation	Vin from (Vo + 0.2V) to 4.8V, maximum load	–		3.5	mV/V
Load regulation	load from 1–450 mA, Vin = 3.6V	–	0.3	0.45	mV/mA
Load step error	Load from 1mA-200mA-400mA in 1 q5s and 400mA-200mA-1mA in 1 µs; Vin ≥ (Vo + 0.2V); Co = 4.7 µF	–	–	70	mV
PSRR	VBAT ≥ 3.6V, Vo = 3.3V, Co = 4.7 µF, maximum load, 100 Hz to 100 kHz	20	–	–	dB
LDO turn-on time	LDO turn-on time when rest of chip is up	–	160	250	µs
Output current limit	–	–	800		mA
In-rush current	Vin = Vo + 0.2V to 4.8V, Co = 4.7 µF, no load	–		280	mA
External output capacitor, Co	Ceramic, X5R, 0402, (ESR: 5m-240mohm), ±10%, 10V	1.0	4.7	5.64	µF
External input capacitor	For SR_VDDBATA5V pin (shared with Bandgap) ceramic, X5R, 0402, ±10%, 10V. Not needed if sharing VBAT cap 4.7 µF with SR_VDDBATP5V.	–	4.7	–	µF

16.3 2.5V LDO (LDO2P5)

Table 37. LDO2P5 Specifications

Specification	Notes	Min.	Typ.	Max.	Unit
Input supply voltage	Min= 2.52+0.15=2.67V Dropout voltage requirement must be met under the maximum load for performance specifications.	2.9	3.6	4.8	V
Output current	–	–	–	70	mA
Output voltage, Vo	default = 2.52V	2.4	2.52	3.4	V
Dropout voltage	at max load			150	mV
Output voltage DC Accuracy	include Line/Load regulation	–5		+5	%
Quiescent current	No load	–	8	–	µA
Line regulation	Vin from (Vo + 0.15V) to 4.8V, maximum load	–11		11	mV
Load Regulation	Load from 1–70 mA (subject to parasitic resistance of package and board). Vin = 2.52 + 0.15V to 4.8V	–	15	31	mV
Leakage current	Powerdown mode. At Junction Temp 85°C	–	–	5	µA
PSRR	VBAT ≥ 3.6V, Vo = 2.52V, Co = 2.2 µF, maximum load, 100 Hz to 100 kHz	20	–	–	dB
LDO turn-on time	LDO turn-on time when rest of chip is up	–	–	260	µs
In-rush current during turn-on	from its output capacitor in fully-discharged state	–	–	100	mA
External output capacitor, Co	Ceramic, X5R, 0402, (ESR: 5m-240mohm), ±20%, 6.3V	0.7[a]	2.2	2.64	µF
External input capacitor	For SR_VDDBATA5V pin (shared with Bandgap) ceramic, X5R, 0402, ±10%, 10V. Not needed if sharing the VBAT capacitor 4.7 µF with SR_VDDBATP5V.	–	1	–	µF

a.Minimum cap value refers to residual cap value after taking into account part–to–part tolerance, DC–bias, temperature, aging

16.4 HSICDVDD LDO

Table 38. HISCDVDD LDO Specifications

Specification	Notes	Min	Typ	Max	Units
Input supply voltage	Min = 1.2V + 0.1V = 1.3V. Dropout voltage requirement must be met under maximum load for performance specifications.	1.3	1.35	1.5	V
Output current	–	–	–	80	mA
Output voltage, V_o	Step size 25 mV. Default = 1.2V.	1.1	1.2	1.275	V
Dropout voltage	At maximum load. Includes 100 mΩ routing resistors at input and output.	–	–	100	mV
Output voltage DC accuracy	Including line/load regulation.	–4	–	4	%
Quiescent current	No load. Dependent on programming. ldo_cntl_i[43], ldo_cntl_i[41] to support different external capacitor loads.	–	182	–	µA
PSRR at 1 kHz	Input ≥ 1.35V, 50 to 300 pF, V_o = 1.2V Load: 80 mA Load: 40 mA	 24 39	–	–	 dB dB

Table 38. HISCDVDD LDO Specifications (Cont.)

Specification	Notes	Min	Typ	Max	Units
PSRR at 10 kHz	Input ≥ 1.35V, 50 to 300 pF, V_o = 1.2V Load: 80 mA Load: 40 mA	 24 38	–	–	 dB dB
PSRR at 100 kHz	Input ≥ 1.35V, 50 to 300 pF, V_o = 1.2V Load: 80 mA Load: 40 mA	 15 27	–	–	 dB dB
Output Capacitor, C_o	Internal capacitor = Sum of supply decoupling caps and supply-to-ground routing parasitic capacitance. Output capacitor dependent on programming.	–	1000	–	pF

16.5 CLDO

Table 39. CLDO Specifications

Specification	Notes	Min	Typ	Max	Units
Input supply voltage, V_{in}	Min = 1.2 + 0.1V = 1.3V. Dropout voltage requirement must be met under maximum load.	1.3	1.35	1.5	V
Output current	–	0.1	–	150	mA
Output voltage, V_o	Programmable in 25 mV steps. Default = 1.2V, load from 0.1–150 mA	1.1	1.2	1.275	V
Dropout voltage	At max load	–	–	100	mV
Output voltage DC accuracy[a]	Includes line/load regulation	–4	–	+4	%
	After trim, load from 0.1–150 mA, includes line/load regulation. $V_{in} > V_o$ + 0.1V.	–2	–	+2	%
Quiescent current	No load	–	10	–	µA
Line regulation	V_{in} from (V_o + 0.1V) to 1.5V, maximum load	–	–	7	mV/V
Load regulation	Load from 1 mA to 150 mA	–	15	25	µV/mA
Leakage current	Power-down	–	–	10	µA
PSRR	@1 kHz, Vin ≥ 1.5V, C_o = 1 µF	20	–		dB
Start-up time of PMU	VIO up and steady. Time from the REG_ON rising edge to the CLDO reaching 1.2V. Includes 256 µs vddc_ok_o delay.	–	–	1106	µs
LDO turn-on time	Chip already powered up.	–	–	180	µs
In-rush current during turn-on	From its output capacitor in a fully-discharged state	–	–	150	mA
External output capacitor, C_o[b]	Total ESR: 30 mΩ–200 mΩ	0.67[c]	1	–	µF
External input capacitor	Only use an external input capacitor at the VDD_LDO pin if it is not supplied from the CBUCK output. Total ESR (trace/capacitor): 30 mΩ–200 mΩ	–	1	–	µF

a.Load from 0.1 to 150 mA.

b.Refer to *PCB Layout Guidelines and Component Selection for Optimized PMU Performance* (4334-AN200-R) for component selection details.

c.The minimum value refers to the residual capacitor value after taking into account the part-to-part tolerance, DC-bias, temperature, and aging.

16.6 LNLDO

Table 40. LNLDO Specifications

Specification	Notes	Min	Typ	Max	Units
Input supply voltage, Vin	Min = $1.2V_o$ + 0.1V = 1.3V. Dropout voltage requirement must be met under maximum load.	1.3	1.35	1.5	V
Output current	–	0.1	–	104	mA
Output voltage, V_o	Programmable in 25 mV steps. Default = 1.2V	1.1	1.2	1.275	V
Dropout voltage	At maximum load	–	–	100	mV
Output voltage DC accuracy[a]	includes line/load regulation, load from 0.1 to 150 mA	–4	–	+4	%
Quiescent current	No load	–	44	–	µA
Line regulation	V_{in} from (V_o + 0.1V) to 1.5V, max load	–	–	7	mV/V
Load regulation	Load from 1 mA to 104 mA	–	15	25	µV/mA
Leakage current	Power-down	–	–	10	µA
Output noise	@30 kHz, 60 mA load, C_o = 1 µF @100 kHz, 60 mA load, C_o = 1 µF	–	–	60 35	nV/root-Hz nV/root-Hz
PSRR	@ 1kHz, input > 1.3V, C_o= 1 µF, V_o = 1.2V	20	–	–	dB
Start-up time of PMU	VIO up and steady. Time from the REG_ON rising edge to the LNLDO reaching 1.2V. Includes 256 µs vddc_ok_o delay.	–	–	1106	µs
LDO turn-on time	Chip already powered up.	–	–	180	µs
In-rush current during turn-on	From its output capacitor in a fully-discharged state	–	–	150	mA
External output capacitor, C_o[b]	Total ESR (trace/capacitor): 30–200 mΩ	0.67[c]	1	–	µF
External input capacitor	Only use an external input capacitor at the VDD_LDO pin if it is not supplied from the CBUCK output. Total ESR (trace/capacitor): 30–200 mΩ	–	1	–	µF

a.Load from 0.1 to 104 mA.

b.Refer to *PCB Layout Guidelines and Component Selection for Optimized PMU Performance* (4334-AN200-R) for component selection details.

c.The minimum value refers to the residual capacitor value after taking into account the part-to-part tolerance, DC-bias, temperature, and aging.

17. System Power Consumption

Note: Values in this data sheet are design goals and are subject to change based on the results of device characterization.

- Unless otherwise stated, these values apply for the conditions specified in Table 24: “Recommended Operating Conditions and DC Characteristics,” on page 58.

17.1 WLAN Current Consumption

The WLAN current consumption measurements are shown in Table 41.

All values in Table 41 are with the Bluetooth core in reset (that is, Bluetooth is off).

Table 41. Typical WLAN Power Consumption

Mode	Bandwidth (MHz)	Band (GHz)	VBAT = 3.6V, VDDIO = 1.8V, T_A 25°C	
			VBAT (mA)	Vio[a] (µA)
Sleep Modes				
Leakage (OFF)	–	–	0.004	220
SLEEP[b]	–	–	0.005	220
IEEE Power Save, DTIM 1[c]	–	–	1.06	220
IEEE Power Save DTIM 3[d]	–	–	0.321	220
Active Modes				
RX (Listen)[e, f]	–	–	44.4	200
RX (Active)[f, g, h]	–	–	57.7	200
TX CCK, 11 Mbps (20.5 dBm @ chip)[h, i, j]	HT20	2.4	325	200
TX, MCS7 (17.5 dBm @ chip)[h, i, j]	HT20	2.4	254	200
TX, MCS7 (17.5 dBm @ chip)[h, i, j]	HT40	2.4	270	200
TX OFDM, 54 Mbps (18 dBm @ chip)[h, i, j]	HT20	2.4	263	200
TX, MCS7 (15 dBm @ chip)[h, i, j]	HT20	5	261	200
TX, MCS7 (15 dBm @ chip)[h, i, j]	HT40	5	283	200
TX OFDM, 54 Mbps (16 dBm @ chip)[h, i, j]	HT20	5	271	200

a.Vio is specified with all pins idle and not driving any loads.

b.Idle between beacons.

c.Beacon interval = 100 ms; beacon duration = 1.9 ms @ 1Mbps (Integrated Sleep + wakeup + beacon)

d.Beacon interval = 300 ms; beacon duration = 1.9 ms @ 1Mbps (Integrated Sleep + wakeup + beacon)

e.Carrier sense (CCA) when no carrier present.

f.Carrier sense (CS) detect/packet RX.

g.Applicable to all supported rates.

h.Duty Cycle = 100%

i.TX output power is measured at the chip-out side.

j.The items of active modes are measured under the real association/throughput with the wireless AP.

17.2 Bluetooth and BLE Current Consumption

The Bluetooth current consumption measurements are shown in Table 42.

■ The WLAN core is in reset (WL_REG_ON = low) for all measurements provided in Table 42.

The BT current consumption numbers are measured based on GFSK TX output power = 8 dBm.

Table 42. Bluetooth Current Consumption

Operating Mode	VBAT (3.6V)	VDDIO (1.8V)	Unit
Sleep	6	133	µA
SCO HV3 master	10.1	–	mA
3DH5/3DH1 master	18.1	–	mA
DM1/DH1 master	22.9	–	mA
DM3/DH3 master	27.0	–	mA
DM5/DH5 master	28.3	–	mA
2EV3	7.5	0.1	mA
BLE scan[a]	169	131	µA
BLE connected (1 second)	43	132	µA

a.No devices present; 1.28 second interval with a scan window of 11.25 ms.

18. Interface Timing and AC Characteristics

18.1 SDIO Timing

18.1.1 SDIO Default Mode Timing

SDIO default mode timing is shown by the combination of Figure 31 and Table 43.

Figure 31. SDIO Bus Timing (Default Mode)

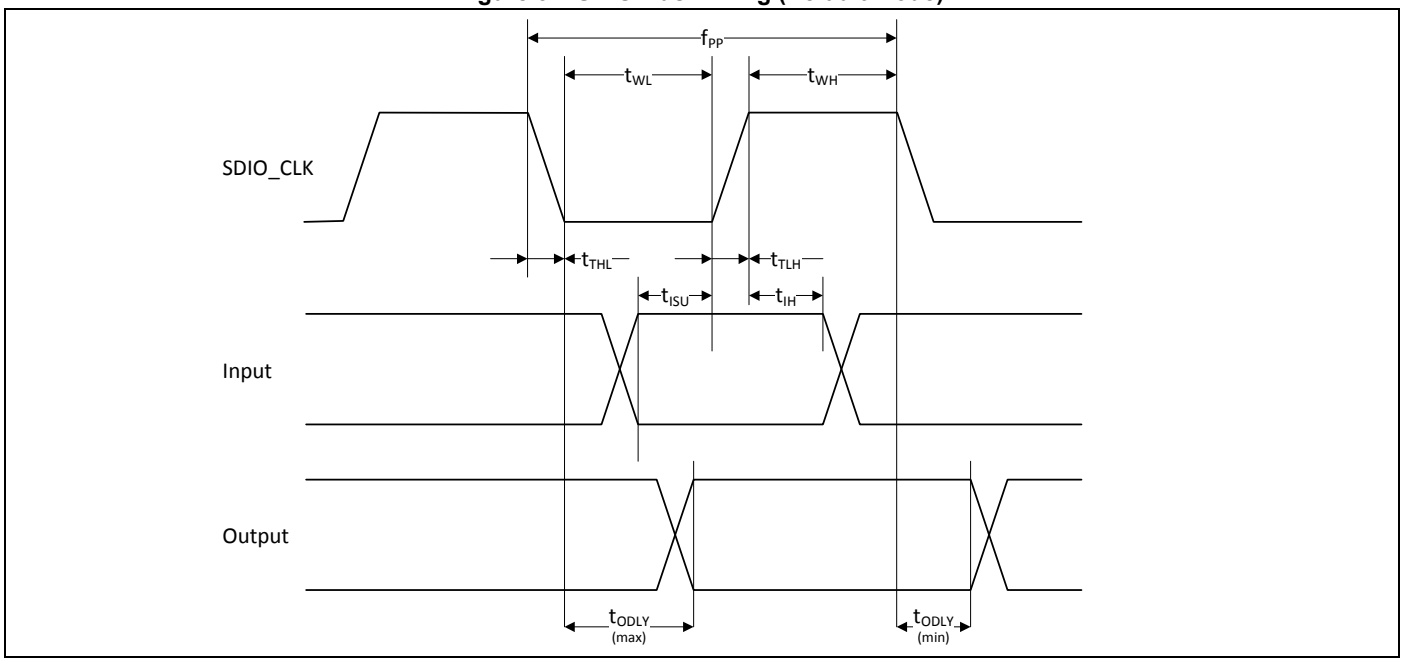

Table 43. SDIO Bus Timing[a] Parameters (Default Mode)

Parameter	Symbol	Minimum	Typical	Maximum	Unit
SDIO CLK (All values are referred to minimum VIH and maximum VIL[b])					
Frequency – Data Transfer mode	fPP	0	–	25	MHz
Frequency – Identification mode	fOD	0	–	400	kHz
Clock low time	tWL	10	–	–	ns
Clock high time	tWH	10	–	–	ns
Clock rise time	tTLH	–	–	10	ns
Clock low time	tTHL	–	–	10	ns
Inputs: CMD, DAT (referenced to CLK)					
Input setup time	tISU	5	–	–	ns
Input hold time	tIH	5	–	–	ns
Outputs: CMD, DAT (referenced to CLK)					
Output delay time – Data Transfer mode	tODLY	0	–	14	ns
Output delay time – Identification mode	tODLY	0	–	50	ns

a.Timing is based on CL ≤ 40pF load on CMD and Data.

b.min(Vih) = 0.7 × VDDIO and max(Vil) = 0.2 × VDDIO.

18.1.2 SDIO High-Speed Mode Timing

SDIO high-speed mode timing is shown by the combination of Figure 32 and Table 44.

Figure 32. SDIO Bus Timing (High-Speed Mode)

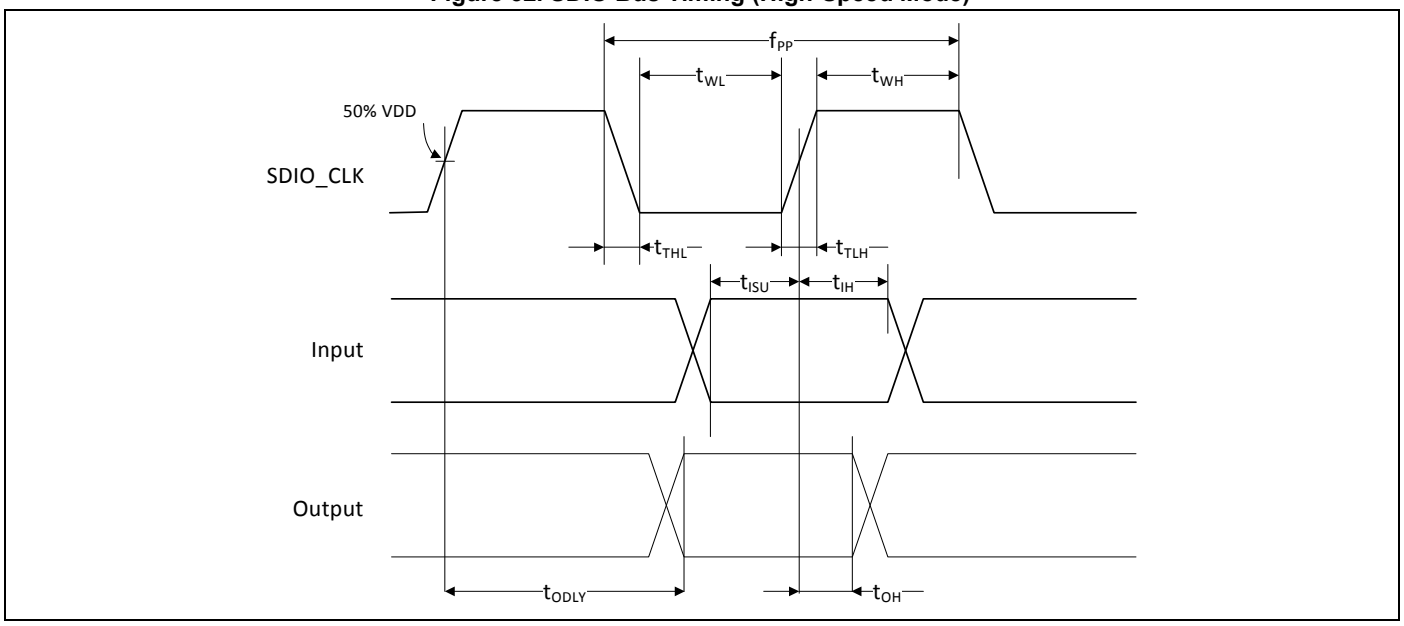

Table 44. SDIO Bus Timing[a] Parameters (High-Speed Mode)

Parameter	Symbol	Minimum	Typical	Maximum	Unit
SDIO CLK (all values are referred to minimum VIH and maximum VIL[b])					
Frequency – Data Transfer Mode	fPP	0	–	50	MHz
Frequency – Identification Mode	fOD	0	–	400	kHz
Clock low time	tWL	7	–	–	ns
Clock high time	tWH	7	–	–	ns
Clock rise time	tTLH	–	–	3	ns
Clock low time	tTHL	–	–	3	ns
Inputs: CMD, DAT (referenced to CLK)					
Input setup Time	tISU	6	–	–	ns
Input hold Time	tIH	2	–	–	ns
Outputs: CMD, DAT (referenced to CLK)					
Output delay time – Data Transfer Mode	tODLY	–	–	14	ns
Output hold time	tOH	2.5	–	–	ns
Total system capacitance (each line)	CL	–	–	40	pF

a.Timing is based on CL ≤ 40pF load on CMD and Data.

b.min(Vih) = 0.7 × VDDIO and max(Vil) = 0.2 × VDDIO.

18.2 HSIC Interface Specifications

Table 45. HSIC Timing Parameters

Parameter	Symbol	Minimum	Typical	Maximum	Unit	Comments
HSIC signaling voltage	V_{DD}	1.1	1.2	1.3	V	–
I/O voltage input low	V_{IL}	–0.3	–	0.35 × V_{DD}	V	–
I/O Voltage input high	V_{IH}	0.65 × V_{DD}	–	V_{DD} + 0.3	V	–
I/O voltage output low	V_{OL}	–	–	0.25 × V_{DD}	V	–
I/O voltage output high	V_{OH}	0.75 × V_{DD}	–	–	V	–
I/O pad drive strength	O_D	40	–	60	Ω	Controlled output impedance driver
I/O weak keepers	I_L	20	–	70	µA	–
I/O input impedance	Z_I	100	–	–	kΩ	–
Total capacitive load[a]	C_L	3	–	14	pF	–
Characteristic trace impedance	T_I	45	50	55	Ω	–
Circuit board trace length	T_L	–	–	10	cm	–
Circuit board trace propagation skew[b]	T_S	–	–	15	ps	–
STROBE frequency[c]	F_{STROBE}	239.988	240	240.012	MHz	± 500 ppm
Slew rate (rise and fall) STROBE and DATA[C]	T_{slew}	0.60 × V_{DD}	1.0	1.2	V/ns	Averaged from 30% ~ 70% points
Receiver data setup time (with respect to STROBE)[c]	T_s	300	–	–	ps	Measured at the 50% point
Receiver data hold time (with respect to STROBE)[c]	T_b	300	–	–	ps	Measured at the 50% point

a.Total Capacitive Load (C_L), includes device Input/Output capacitance, and capacitance of a 50Ω PCB trace with a length of 10 cm.

b.Maximum propagation delay skew in STROBE or DATA with respect to each other. The trace delay should be matched between STROBE and DATA to ensure that the signal timing is within specification limits at the receiver.

c.Jitter and duty cycle are not separately specified parameters, they are incorporated into the values in the table above.

18.3 JTAG Timing

Table 46. JTAG Timing Characteristics

Signal Name	Period	Output Maximum	Output Minimum	Setup	Hold
TCK	125 ns	–	–	–	–
TDI	–	–	–	20 ns	0 ns
TMS	–	–	–	20 ns	0 ns
TDO	–	100 ns	0 ns	–	–
$\overline{\text{JTAG_TRST}}$	250 ns	–	–	–	–

19. Power-Up Sequence and Timing

19.1 Sequencing of Reset and Regulator Control Signals

The CYW43340 has three signals that allow the host to control power consumption by enabling or disabling the Bluetooth, WLAN, and internal regulator blocks. These signals are described below. Additionally, diagrams are provided to indicate proper sequencing of the signals for various operational states (see Figure 33, Figure 34 on page 88, and Figure 35 and Figure 36 on page 89). The timing values indicated are minimum required values; longer delays are also acceptable.

- The WL_REG_ON and BT_REG_ON signals are ORed in the CYW43340. The diagrams show both signals going high at the same time (as would be the case if both REG signals were controlled by a single host GPIO). If two independent host GPIOs are used (one for WL_REG_ON and one for BT_REG_ON), then only one of the two signals needs to be high to enable the CYW43340 regulators.
- The CYW43340 has an internal power-on reset (POR) circuit. The device will be held in reset for a maximum of 110 ms after VDDC and VDDIO have both passed the POR threshold (see Table 24: “Recommended Operating Conditions and DC Characteristics,” on page 58). Wait at least 150 ms after VDDC and VDDIO are available before initiating SDIO accesses.

VBAT should not rise faster than 40 µs. VBAT should be up before or at the same time as VDDIO. VDDIO should NOT be present first or be held high before VBAT is high.

19.1.1 Description of Control Signals

- **WL_REG_ON**: Used by the PMU to power up the WLAN section. It is also OR-gated with the BT_REG_ON input to control the internal CYW43340 regulators. When this pin is high, the regulators are enabled and the WLAN section is out of reset. When this pin is low the WLAN section is in reset. If both the BT_REG_ON and WL_REG_ON pins are low, the regulators are disabled.
- **BT_REG_ON**: Used by the PMU (OR-gated with WL_REG_ON) to power up the internal CYW43340 regulators. If both the BT_REG_ON and WL_REG_ON pins are low, the regulators are disabled. When this pin is low and WL_REG_ON is high, the BT section is in reset.

Note: For both the WL_REG_ON and BT_REG_ON pins, there should be at least a 10 msec time delay between consecutive toggles (where both signals have been driven low). This is to allow time for the CBUCK regulator to discharge. If this delay is not followed, then there may be a VDDIO in-rush current on the order of 36 mA during the next PMU cold start.

19.1.2 Control Signal Timing Diagrams

Figure 33. WLAN = ON, Bluetooth = ON

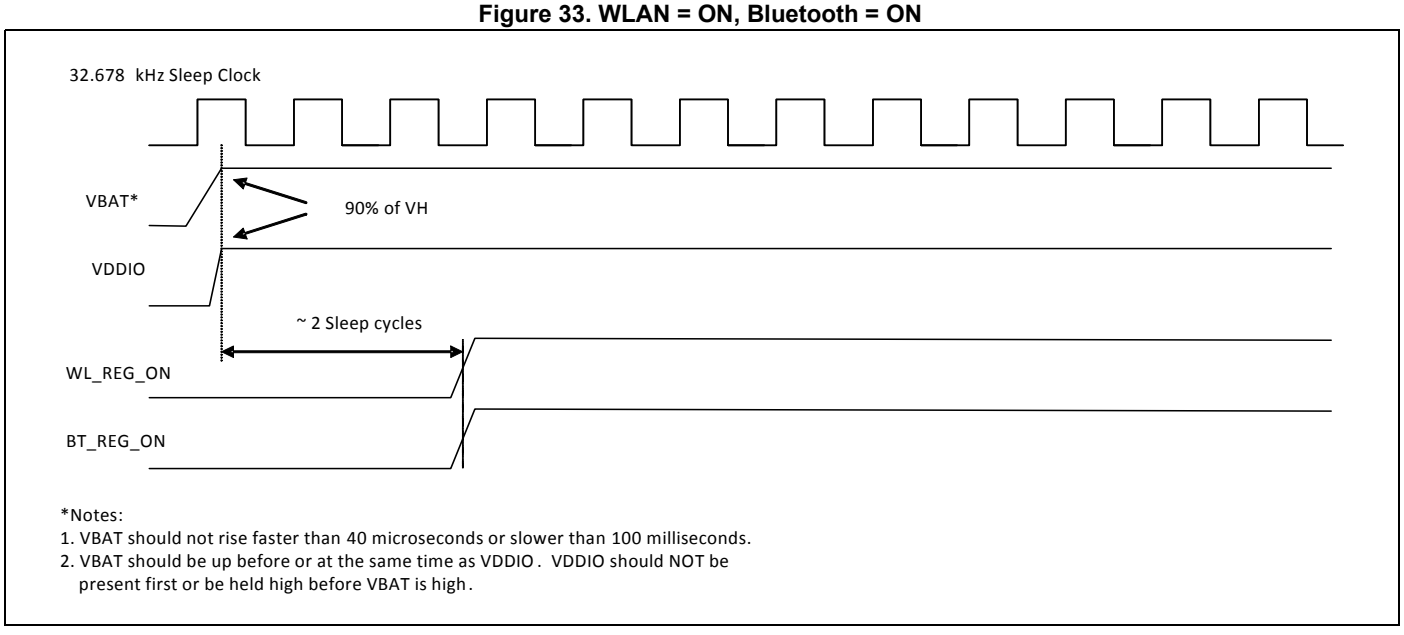

Figure 34. WLAN = OFF, Bluetooth = OFF

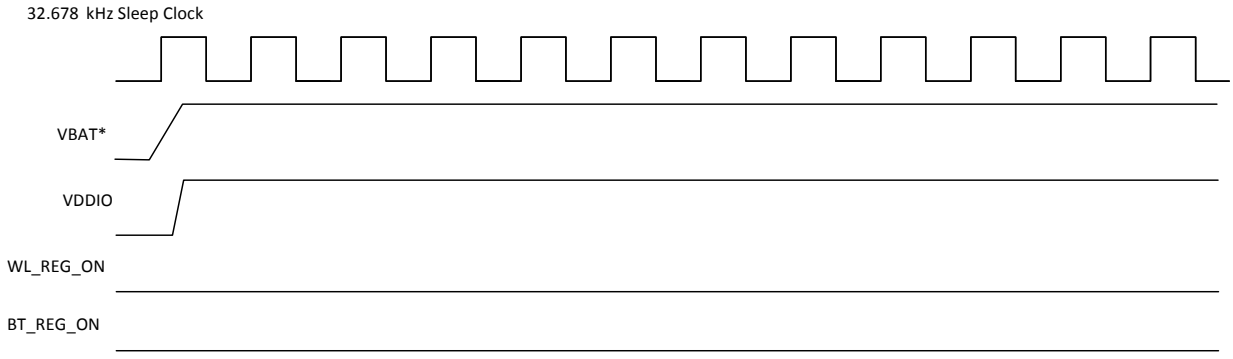

*Notes:
1. VBAT should not rise faster than 40 microseconds or slower than 100 milliseconds.
2. VBAT should be up before or at the same time as VDDIO. VDDIO should NOT be present first or be held high before VBAT is high.

Figure 35. WLAN = ON, Bluetooth = OFF

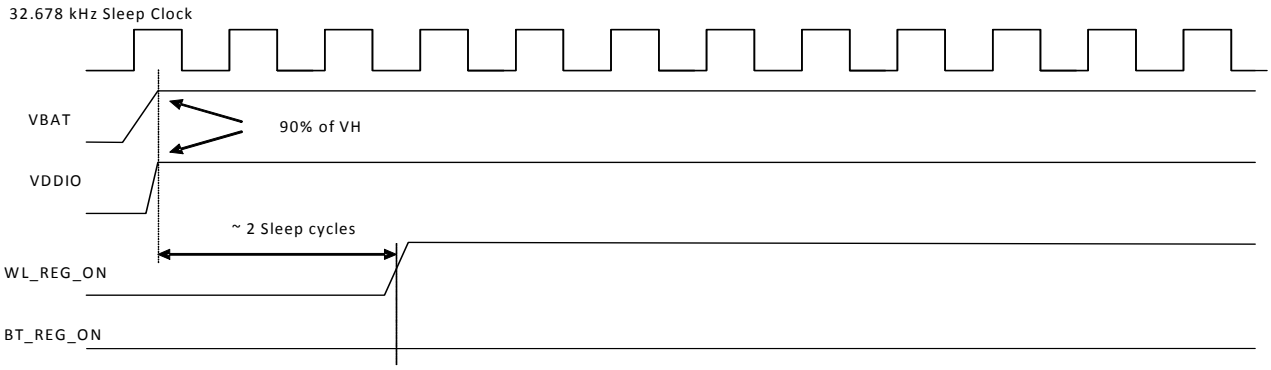

*Notes:
1. VBAT should not rise faster than 40 microseconds or slower than 100 milliseconds.
2. VBAT should be up before or at the same time as VDDIO. VDDIO should NOT be present first or be held high before VBAT is high.

Figure 36. WLAN = OFF, Bluetooth = ON

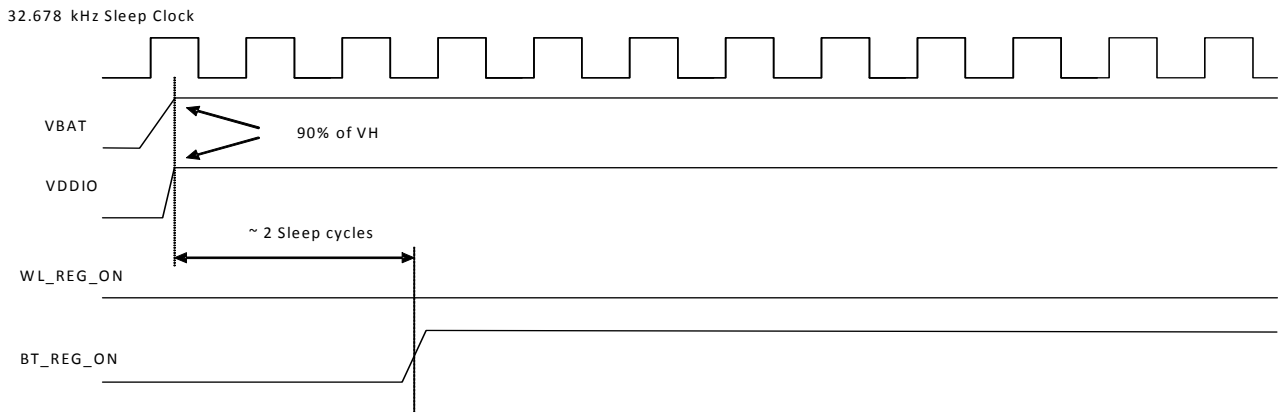

*Notes:
1. VBAT should not rise faster than 40 microseconds or slower than 100 milliseconds.
2. VBAT should be up before or at the same time as VDDIO. VDDIO should NOT be present first or be held high before VBAT is high.

20. Package Information

20.1 Package Thermal Characteristics

Table 47. Package Thermal Characteristics[a]

Characteristic	WLBGA
θ_{JA} (°C/W) (value in still air)	36.8
θ_{JB} (°C/W)	5.93
θ_{JC} (°C/W)	2.82
Ψ_{JT} (°C/W)	9.26
Ψ_{JB} (°C/W)	16.93
Maximum Junction Temperature T_j	114.08
Maximum Power Dissipation (W)	1.198

a. No heat sink, TA = 70°C. This is an estimate, based on a 4-layer PCB that conforms to EIA/JESD51–7 (101.6 mm × 101.6 mm × 1.6 mm) and P = 1.198W continuous dissipation.

20.2 Junction Temperature Estimation and PSI_{JT} Versus $THETA_{JC}$

Package thermal characterization parameter PSI–J_T (Ψ_{JT}) yields a better estimation of actual junction temperature (T_J) versus using the junction-to-case thermal resistance parameter Theta–J_C (θ_{JC}). The reason for this is that θ_{JC} assumes that all the power is dissipated through the top surface of the package case. In actual applications, some of the power is dissipated through the bottom and sides of the package. Ψ_{JT} takes into account power dissipated through the top, bottom, and sides of the package. The equation for calculating the device junction temperature is:

$$T_J = T_T + P \times \Psi_{JT}$$

Where:

- T_J = Junction temperature at steady-state condition (°C)
- T_T = Package case top center temperature at steady-state condition (°C)
- P = Device power dissipation (Watts)
- Ψ_{JT} = Package thermal characteristics; no airflow (°C/W)

20.3 Environmental Characteristics

For environmental characteristics data, see Table 22: “Environmental Ratings,” on page 57.

21. Mechanical Information

Figure 37. 141-Ball WLBGA Package Mechanical Information

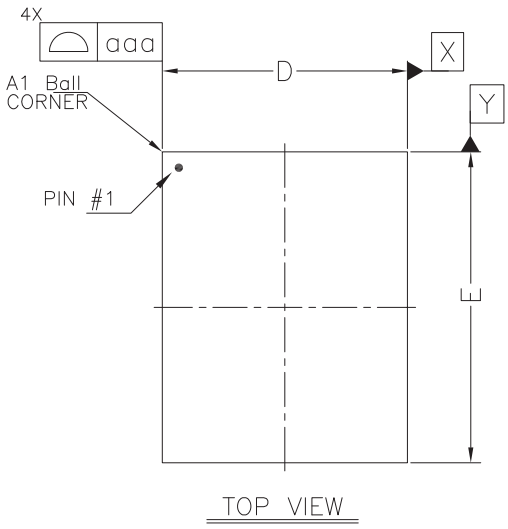

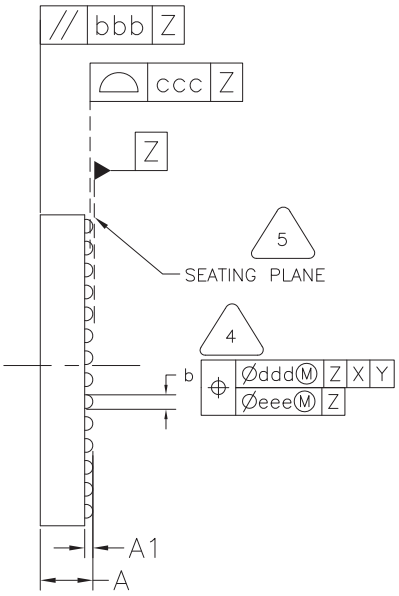

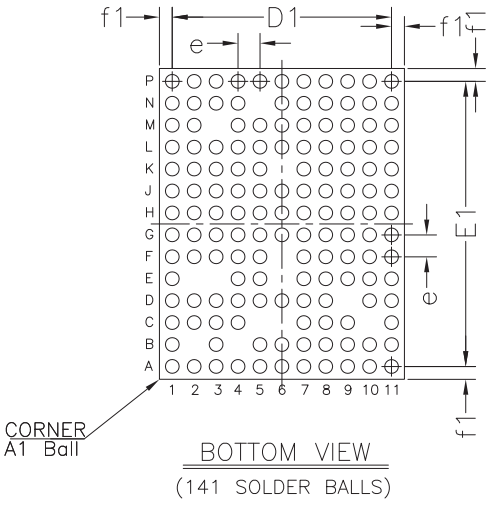

DIMENSIONAL REFERENCES (mm)			
REF.	MIN	NOM	MAX
A	–	–	0.55
A1	0.160	0.190	0.220
D	4.430	4.470	4.510
D1		4.00 REF.	
E	5.630	5.670	5.710
E1		5.20 REF.	
b	0.20	0.25	0.30
e		0.40 BSC	
f1		0.235 BSC	
aaa	–	–	0.10
bbb	–	–	0.10
ccc	–	–	0.05
ddd	–	–	0.10
eee	–	–	0.05

Filename: MOD01760–000

6. REFER TO BROADCOM APPLICATION NOTE "WAFER–LEVEL BALL GRID ARRAY (WLBGA) OVERVIEW AND ASSEMBLY GUIDELINES" FOR DESIGN, IMPLEMENTATION, AND MANUFACTURING RECOMMENDATIONS AND GUIDELINES.

5 PRIMARY DATUM Z AND SEATING PLANE ARE DEFINED BY THE SPHERICAL CROWNS OF THE SOLDER BUMPS.

4 DIMENSION IS MEASURED AT THE MAXIMUM SOLDER BUMP DIAMETER, PARALLEL TO PRIMARY DATUM Z.

3. THE BASIC SOLDER BUMP PITCH IS 0.40mm

2. THIS PACKAGE CONFORMS TO THE JEDEC REGISTERED OUTLINE MO–225.

1. ALL DIMENSIONS AND TOLERANCES CONFORM TO ASME Y14.5M–1994.

NOTES: UNLESS OTHERWISE SPECIFIED

Figure 38. WLBGA Keep-Out Areas for PCB Layout—Bottom View

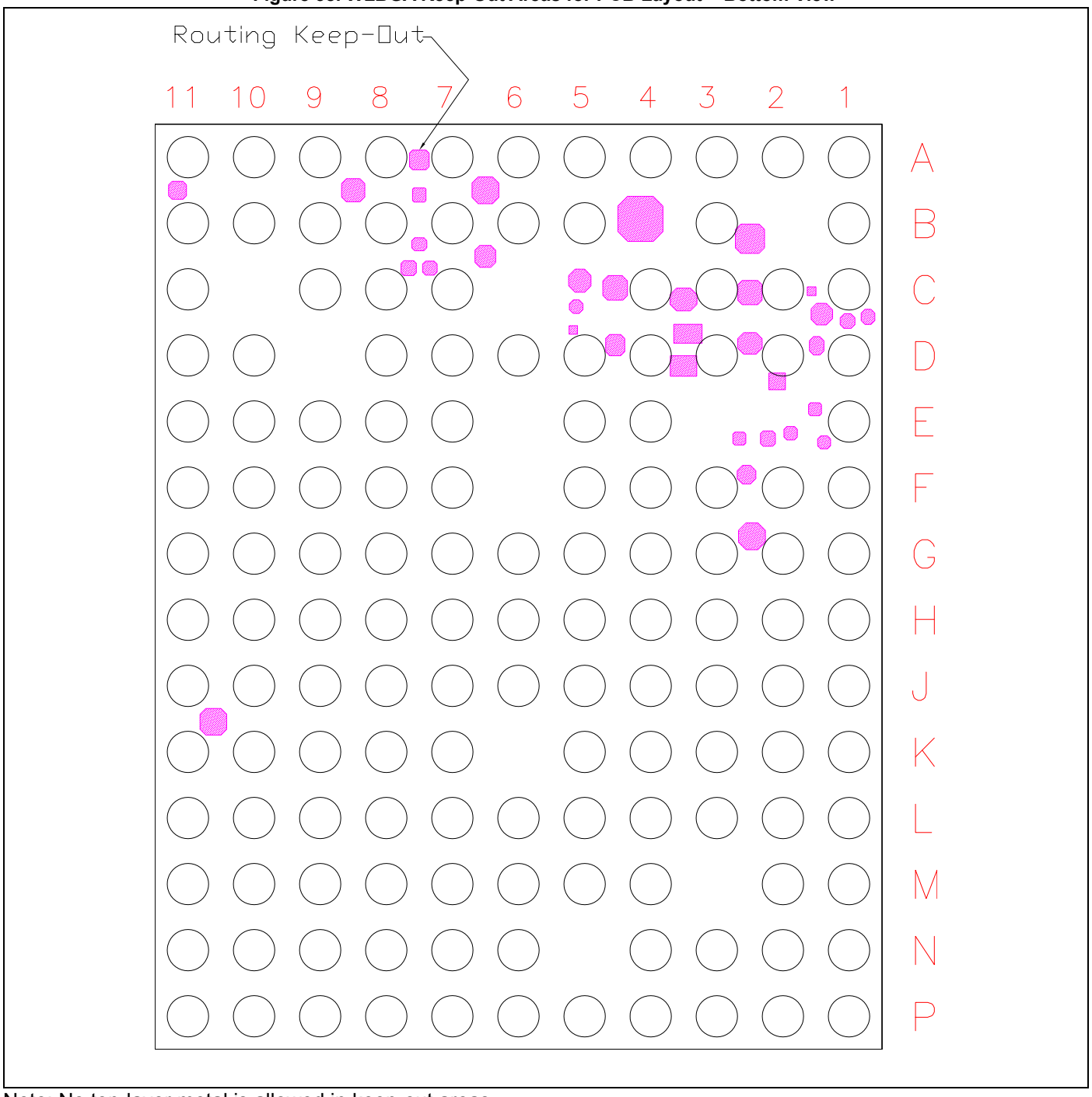

Note: No top-layer metal is allowed in keep-out areas.

22. Ordering Information

Part Number	Package	Description	Operating Ambient Temperature
CYW43340XKUBG	141 ball WLBGA (5.67 mm × 4.47 mm, 0.4 mm pitch)	Dual-band 2.4 GHz and 5 GHz WLAN + BT 4.0	–30°C to +85°C
CYW43340HKUBG	141 ball WLBGA (5.67 mm × 4.47 mm, 0.4 mm pitch)	Dual-band 2.4 GHz and 5 GHz WLAN + BT 4.0 + BSP	–30°C to +85°C

Document History

Document Title: CYW43340 Single-Chip, Dual-Band (2.4 GHz/5 GHz) IEEE 802.11 a/b/g/n MAC/Baseband/Radio with Integrated Bluetooth 4.0 Document Number: 002-14943				
Revision	**ECN**	**Orig. of Change**	**Submission Date**	**Description of Change**
**	-	-	07/09/2012	43340–DS100-R: • Initial Release
*A	-	-	12/21/2012	43340–DS101-R: Updated: • HCI high-speed UART: H4+ mode no longer supported. • General Description on page 1. • “IEEE 802.11x Key Features” on page 5: shared Bluetooth and 2.4 GHz WLAN signal path. • Figure 11: “Startup Signaling Sequence,” on page 54. • “External Coexistence Interface” on page 80. • Table 26: “WLBGA and WLCSP Signal Descriptions,” on page 127. • Table 27: “WLAN GPIO Functions and Strapping Options (Advance Information),” on page 140. • Table 31: “I/O States,” on page 145 . • Table 32: “Absolute Maximum Ratings,” on page 149. • Table 36: “Bluetooth Receiver RF Specifications,” on page 154. • Table 37: “Bluetooth Transmitter RF Specifications,” on page 158. • Table 53: “Typical WLAN Power Consumption,” on page 185. • Table 54: “Bluetooth and FM Current Consumption,” on page 187.
*B	-	-	04/22/2013	43340–DS102-R: Updated: • Figure 1: “Functional Block Diagram,” on page 1. • AES feature description on page 5. • VBAT voltage range changed from 2.3–4.8V to 2.9–4.8V. • Figure 4: “Typical Power Topology,” on page 29. • “Link Control Layer” on page 51: substates. • Table 33: “Bluetooth Receiver RF Specifications,” on page 131. • Figure 52: “WLAN Port Locations (5 GHz),” on page 142. • Table 34: “Bluetooth Transmitter RF Specifications,” on page 135: Power control step. • Table 36: “BLE RF Specifications,” on page 136: Rx sense. • Table 37: “FM Receiver Specifications,” on page 137. • Table 39: “WLAN 2.4 GHz Receiver Performance Specifications,” on page 144. • Table 40: “WLAN 2.4 GHz Transmitter Performance Specifications,” on page 148. • Table 42: “WLAN 5 GHz Transmitter Performance Specifications,” on page 153. • Table 50: “Typical WLAN Power Consumption,” on page 162.
*C		-	08/30/0213	43340–DS103-R: • Removed ‘Preliminary’ from the document type.
*D	-	-	12/03/2013	43340–DS104-R: Updated: • Proprietary protocols in “Standards Compliance” on page 21. • Table 24: “ESD Specifications,” on page 102. • Table 33: “WLAN 2.4 GHz Transmitter Performance Specifications,” on page 124. • Table 35: “WLAN 5 GHz Transmitter Performance Specifications,” on page 129.
*E	-	-	02/14/2014	43340–DS105-R: Updated: • Section 26: “Ordering Information,” on page 194.

Document Title: CYW43340 Single-Chip, Dual-Band (2.4 GHz/5 GHz) IEEE 802.11 a/b/g/n MAC/Baseband/Radio with Integrated Bluetooth 4.0 Document Number: 002-14943				
*F	-	-	03/04/0214	43340–DS106-R: • Figure 38: “141-Bump CYW43340 WLBGA Ball Map (Bottom View),” on page 58 and Table 18: “WLBGA Signal Descriptions,” on page 59: Updated signal names for No Connect, VDDC, VDDIO, VSS, VSSC, and WRF_PA5G_VBAT_GND3P3 pins.
*G	-	-	04/07/2014	43340–DS107-R: Updated: • [43341]Figure 48: “NFC Boot-Up Sequence (Secure Patch Download) from Snooze,” on page 117 • [43341]“NFC Operation Requirement” on page 119 • Table 28: “WLAN GPIO Functions and Strapping Options (Advance Information),” on page 144 • Title change (2.5 GHz to 2.4 GHz) for Figure 55 on page 169
*H	-	-	07/07/2014	43340–DS108-R: Updated: • Figure 65: “WLBGA Keep-Out Areas for PCB Layout — Bottom View,” on page 177
*I	-	-	01/28/2015	43340–DS109-R: Updated: • Table 18: “WLBGA Signal Descriptions,” on page 59
*J	-	-	09/10/2015	43340–DS110-R: Updated: • Table 32: “WLAN 2.4 GHz Receiver Performance Specifications,” on page 85
*K	5529544	UTSV	11/23/2016	Updated to Cypress template
*L	5675330	UTSV	03/28/2017	Removed FM and gSPI sections throughout the document.

Sales, Solutions, and Legal Information

Worldwide Sales and Design Support

Cypress maintains a worldwide network of offices, solution centers, manufacturer's representatives, and distributors. To find the office closest to you, visit us at Cypress Locations.

Products

ARM® Cortex® Microcontrollers	cypress.com/arm
Automotive	cypress.com/automotive
Clocks & Buffers	cypress.com/clocks
Interface	cypress.com/interface
Internet of Things	cypress.com/iot
Lighting & Power Control	cypress.com/powerpsoc
Memory	cypress.com/memory
PSoC	cypress.com/psoc
Touch Sensing	cypress.com/touch
USB Controllers	cypress.com/usb
Wireless/RF	cypress.com/wireless

PSoC®Solutions

PSoC 1 | PSoC 3 | PSoC 4 | PSoC 5LP

Cypress Developer Community

Forums | WICED IoT Forums | Projects | Video | Blogs | Training | Components

Technical Support

cypress.com/support

© Cypress Semiconductor Corporation, 2012-2017. This document is the property of Cypress Semiconductor Corporation and its subsidiaries, including Spansion LLC ("Cypress"). This document, including any software or firmware included or referenced in this document ("Software"), is owned by Cypress under the intellectual property laws and treaties of the United States and other countries worldwide. Cypress reserves all rights under such laws and treaties and does not, except as specifically stated in this paragraph, grant any license under its patents, copyrights, trademarks, or other intellectual property rights. If the Software is not accompanied by a license agreement and you do not otherwise have a written agreement with Cypress governing the use of the Software, then Cypress hereby grants you a personal, non-exclusive, nontransferable license (without the right to sublicense) (1) under its copyright rights in the Software (a) for Software provided in source code form, to modify and reproduce the Software solely for use with Cypress hardware products, only internally within your organization, and (b) to distribute the Software in binary code form externally to end users (either directly or indirectly through resellers and distributors), solely for use on Cypress hardware product units, and (2) under those claims of Cypress's patents that are infringed by the Software (as provided by Cypress, unmodified) to make, use, distribute, and import the Software solely for use with Cypress hardware products. Any other use, reproduction, modification, translation, or compilation of the Software is prohibited.

TO THE EXTENT PERMITTED BY APPLICABLE LAW, CYPRESS MAKES NO WARRANTY OF ANY KIND, EXPRESS OR IMPLIED, WITH REGARD TO THIS DOCUMENT OR ANY SOFTWARE OR ACCOMPANYING HARDWARE, INCLUDING, BUT NOT LIMITED TO, THE IMPLIED WARRANTIES OF MERCHANTABILITY AND FITNESS FOR A PARTICULAR PURPOSE. To the extent permitted by applicable law, Cypress reserves the right to make changes to this document without further notice. Cypress does not assume any liability arising out of the application or use of any product or circuit described in this document. Any information provided in this document, including any sample design information or programming code, is provided only for reference purposes. It is the responsibility of the user of this document to properly design, program, and test the functionality and safety of any application made of this information and any resulting product. Cypress products are not designed, intended, or authorized for use as critical components in systems designed or intended for the operation of weapons, weapons systems, nuclear installations, life-support devices or systems, other medical devices or systems (including resuscitation equipment and surgical implants), pollution control or hazardous substances management, or other uses where the failure of the device or system could cause personal injury, death, or property damage ("Unintended Uses"). A critical component is any component of a device or system whose failure to perform can be reasonably expected to cause the failure of the device or system, or to affect its safety or effectiveness. Cypress is not liable, in whole or in part, and you shall and hereby do release Cypress from any claim, damage, or other liability arising from or related to all Unintended Uses of Cypress products. You shall indemnify and hold Cypress harmless from and against all claims, costs, damages, and other liabilities, including claims for personal injury or death, arising from or related to any Unintended Uses of Cypress products.

Cypress, the Cypress logo, Spansion, the Spansion logo, and combinations thereof, WICED, PSoC, CapSense, EZ-USB, F-RAM, and Traveo are trademarks or registered trademarks of Cypress in the United States and other countries. For a more complete list of Cypress trademarks, visit cypress.com. Other names and brands may be claimed as property of their respective owners.