EZ-USB AT2LP™ USB 2.0 to ATA/ATAPI Bridge

1.0 Features (CY7C68300B/CY7C68301B and CY7C68320/CY7C68321)

- Fixed-function mass storage device—requires no firmware code
- Two power modes: Self-powered and USB bus-powered to enable bus powered CF readers and truly portable USB hard drives
- Certified compliant for USB 2.0 (TID# 40460273), the USB Mass Storage Class, and the USB Mass Storage Class Bulk-Only Transport (BOT) Specification
- Operates at high (480-Mbps) or full (12-Mbps) speed USB
- Complies with ATA/ATAPI-6 specification
- Supports 48-bit addressing for large hard drives
- Supports ATA security features
- Supports all ATA commands via ATACB function
- Supports mode page 5 for BIOS boot support
- Supports ATAPI serial number VPD page retrieval for Digital Rights Management (DRM) compatibility
- Supports PIO modes 0, 3, 4, multiword DMA mode 2, and UDMA modes 2, 3, 4
- Uses one external serial EEPROM for storage of USB descriptors and device configuration data
- ATA interface IRQ signal support
- Support for one or two ATA/ATAPI devices
- Support for CompactFlash and one ATA/ATAPI device
- Can place the ATA interface in high-impedance (Hi-Z) to allow sharing of the ATA bus with another controller (e.g., an IEEE-1394 to ATA bridge chip or MP3 Decoder)
- Support for board-level manufacturing test via USB interface
- Low-power 3.3V operation
- Fully compatible with native USB mass storage class drivers
- Cypress mass storage class drivers available for Windows (98SE, ME, 2000, XP) and Mac OS X

1.1 Features (CY7C68320/CY7C68321 only)

- Supports HID interface or custom GPIOs to enable features such as single button backup, power-off, LED-based notification, etc.
- Lead-free 56-pin QFN and 100-pin TQFP packages
- CY7C68321 is ideal for battery-powered designs
- CY7C68320 is ideal for self- and bus-powered designs

1.2 Features (CY7C68300B/CY7C68301B only)

- Pin-compatible with CY7C68300A (using Backward Compatibility mode)
- Lead-free 56-pin SSOP and 56-pin QFN packages
- CY7C68301B is ideal for battery-powered designs
- CY7C68300B is ideal for self- and bus-powered designs

2.0 Block Diagram

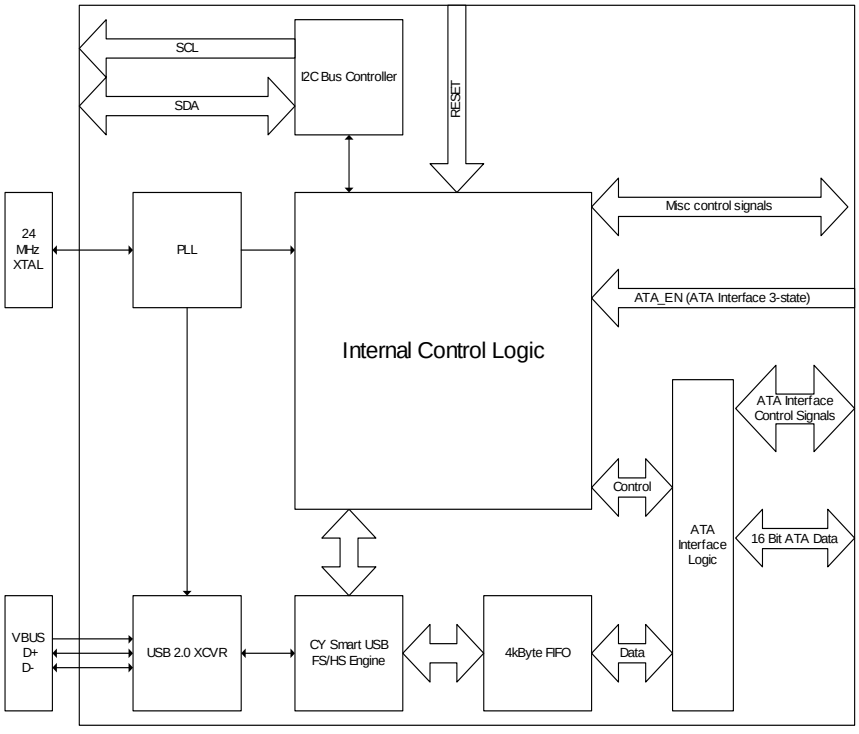

Figure 2-1. Block Diagram

3.0 Applications

The CY7C68300B/301B and CY7C68320/321 implement a USB 2.0 bridge for all ATA/ATAPI-6 compliant mass storage devices, such as the following.

- Hard drives
- CD-ROM, CD-R/W
- DVD-ROM, DVD-RAM, DVD+/–R/W
- MP3 players
- Personal media players
- CompactFlash
- Microdrives
- Tape drives
- Personal video recorders

The CY7C68300B/301B and CY7C68320/321 support one or two devices in the following configurations.

- ATA/ATAPI master only
- ATA/ATAPI slave only
- ATA/ATAPI master and slave
- CompactFlash only
- ATA/ATAPI slave and CompactFlash or other removable IDE master

3.1 Additional Resources

- CY4615B EZ-USB AT2LP Reference Design Kit
- *USB Specification* version 2.0
- *ATA Specification* T13/1410D Rev 3B
- USB *Mass Storage Class Bulk Only Transport Specification*, www.usb.org

4.0 Introduction

The EZ-USB AT2LP™ (CY7C68300B/CY7C68301B and CY7C68320/CY7C68321) implements a fixed function bridge between one USB port and one or two ATA- or ATAPI-based mass storage device ports. This bridge adheres to the *Mass Storage Class Bulk-Only Transport Specification* and is intended for bus- and self-powered devices.

The AT2LP is the latest addition to the Cypress USB mass storage portfolio, and is an ideal cost- and power-reduction path for designs that previously used the ISD-300A1, ISD-300LP, or EZ-USB AT2.

Specifically, the CY7C68300B/CY7C68301B includes a mode that makes it pin-for-pin compatible with the EZ-USB AT2 (CY7C68300A).

The USB port of the CY7C68300B/301B and CY7C68320/321 (AT2LP) are connected to a host computer directly or via the downstream port of a USB hub. Host software issues commands and data to the AT2LP and receives status and data from the AT2LP using standard USB protocol.

The ATA/ATAPI port of the AT2LP is connected to one or two mass storage devices. A 4-Kbyte buffer maximizes ATA/ATAPI data transfer rates by minimizing losses due to device seek times. The ATA interface supports ATA PIO modes 0, 3, and 4, multiword DMA mode 2 and Ultra DMA modes 2, 3, and 4.

The device initialization process is configurable, enabling the AT2LP to initialize ATA/ATAPI devices without software intervention.

5.0 68300A Compatibility

The CY7C68300B/301B and CY7C68320/321 are available in three package types that are pictured in the following sections. As mentioned above, the CY7C68300B/301B contains a backward compatibility mode that allows the CY7C68300B/301B to be used in existing EZ-USB AT2 (CY7C68300A) designs. Please refer to the logic flow below for more information on the pinout selection process.

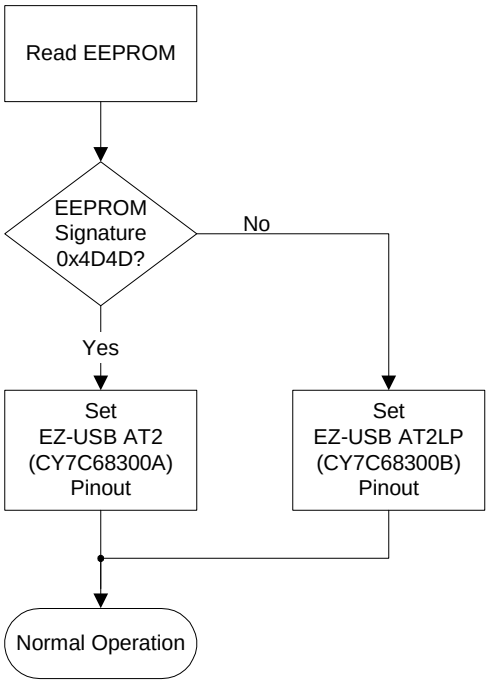

Figure 5-1. Simplified Startup Flowchart (68300B only)

5.1 Pin Diagrams

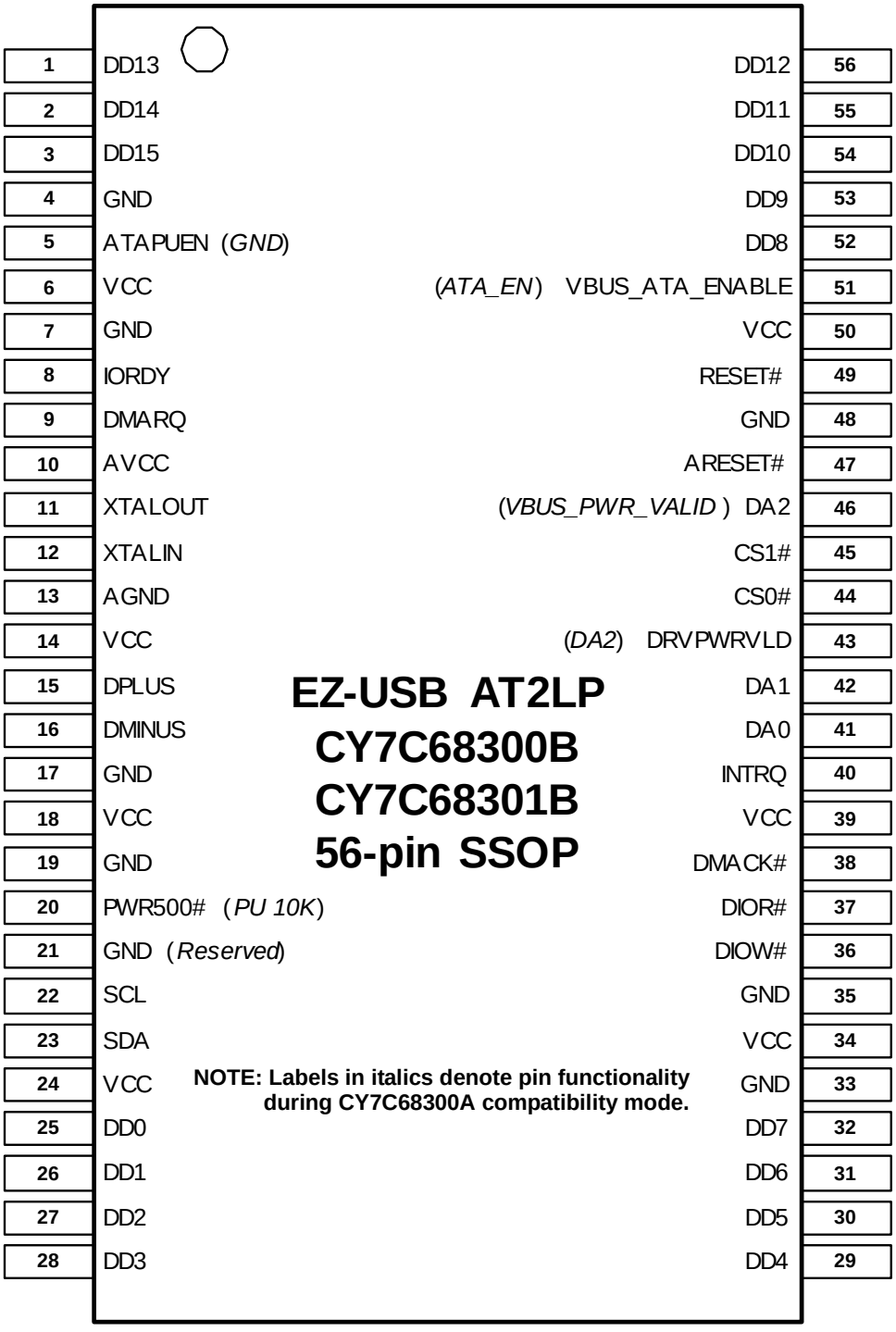

Figure 5-2. 56-pin SSOP Pinout (CY7C68300B/CY7C68301B only)

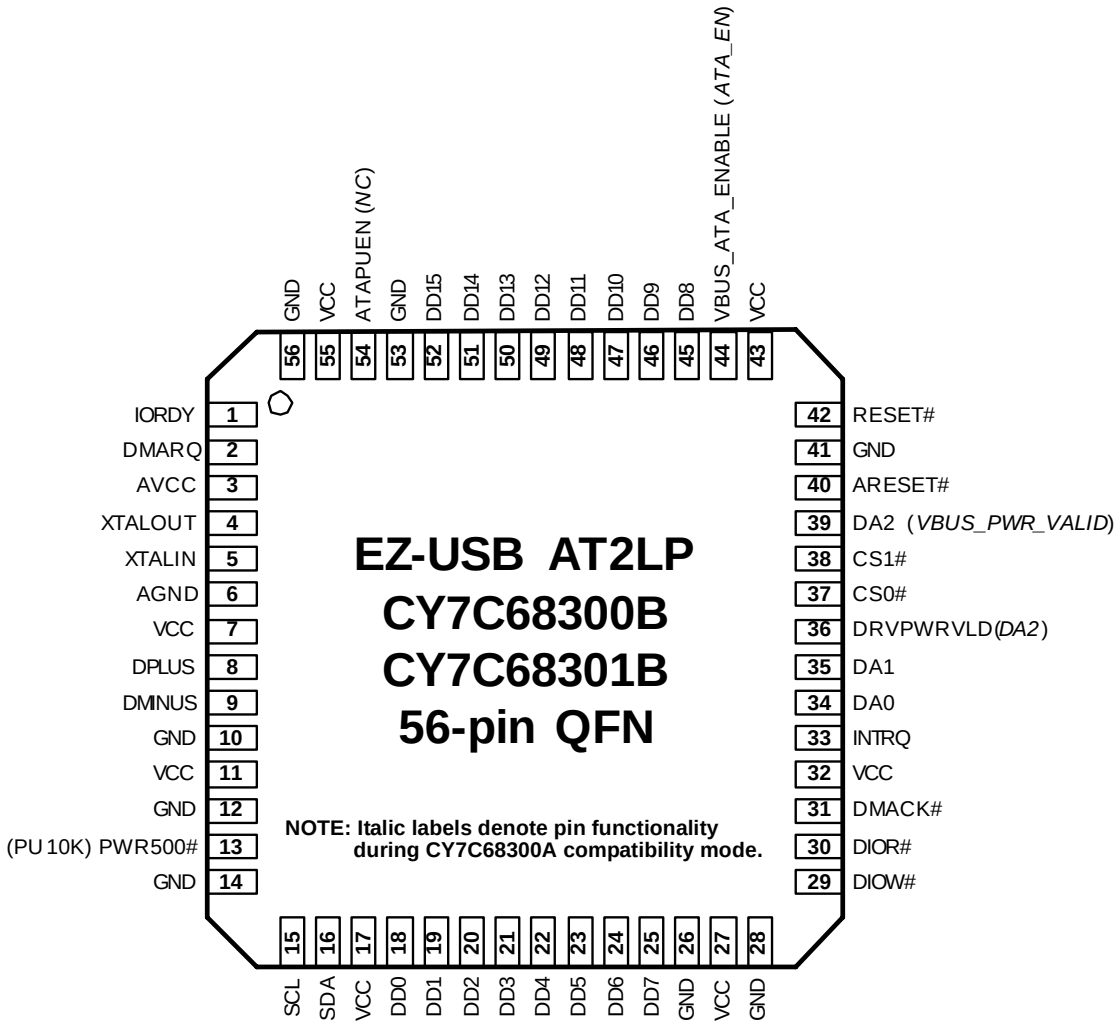

Figure 5-3. 56-pin QFN Pinout (CY7C68300B/CY7C68301B)

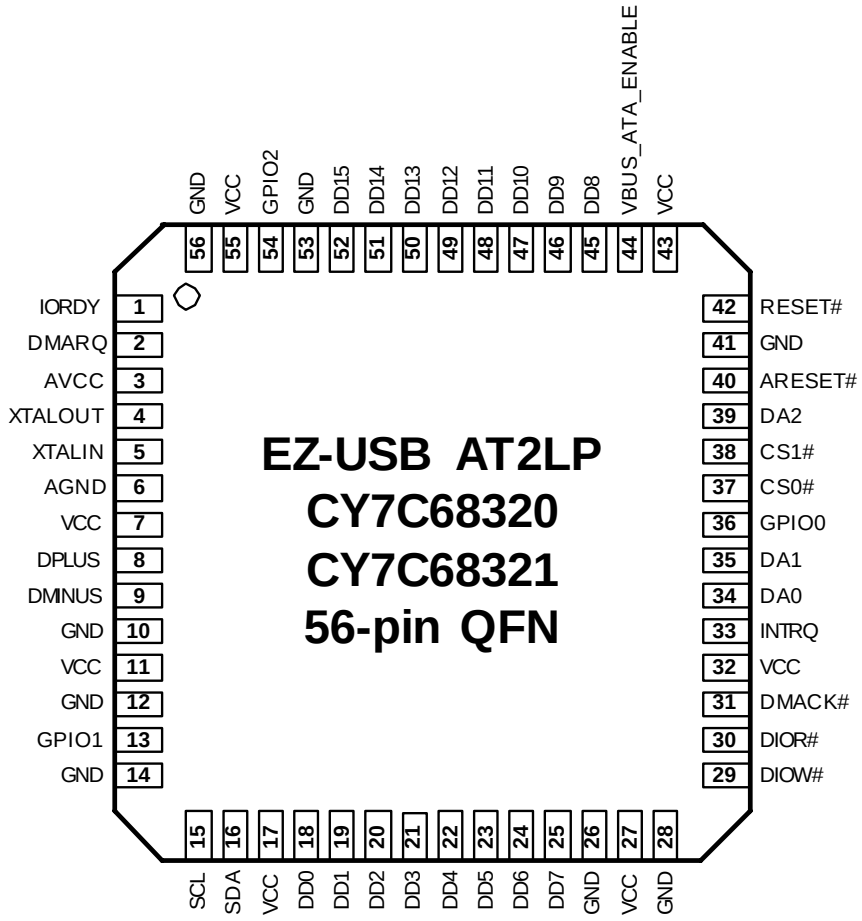

Figure 5-4. 56-pin QFN Pinout (CY7C68320/CY7C68321)

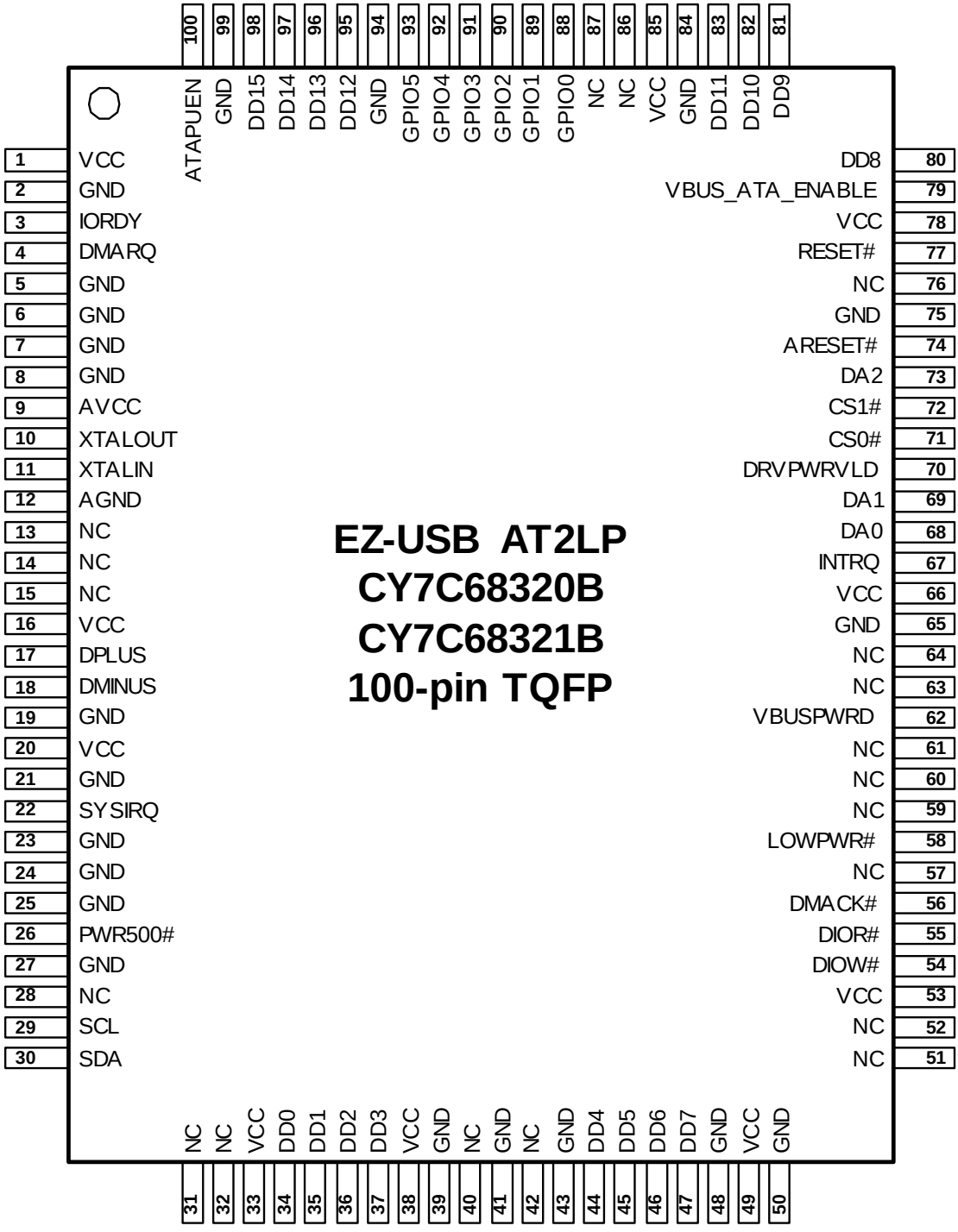

Figure 5-5. 100-pin TQFP Pinout (CY7C68320/CY7C68321 only)

5.2 Pin Descriptions

The following table lists the pinouts for the 56-pin SSOP, 56-pin QFN and 100-pin TQFP package options for the AT2LP. Please refer to the Pin Diagrams in section 5.1 for differences between the 68300B/01B and 68320/321 pinouts for the 56-pin packages. For information on the CY7C68300A pinout, please refer to the CY7C68300A data sheet that is found in the "EZ-USB AT2" folder of the CY4615B reference design kit CD.

Table 5-1. AT2LP Pin Descriptions
Note: (Italics pin names denote pin functionality during CY7C68300A-compatibility mode)

56 SSOP	56 QFN	100 TQFP	Pin Name	Pin Type	Default State at Start-up	Pin Description
1	50	96	DD13	I/O[1]	Hi-Z	**ATA Data bit 13**.
2	51	97	DD14	I/O[1]	Hi-Z	**ATA Data bit 14**.
3	52	98	DD15	I/O[1]	Hi-Z	**ATA Data bit 15**.
4	53	99	GND	GND		**Ground**.
5	54[3]	100[3]	ATAPUEN (*NC*)	I/O		ATA pull-up voltage source for bus-powered applications (see section 5.3.10). **Alternate Function**: Input when the EEPROM configuration byte 8 has bit 7 set to one. The input value is reported through EP1IN (byte 0, bit 2).
6	55	1	V_{CC}	PWR		**V_{CC}**. Connect to 3.3V power source.
7	56	2	GND	GND		**Ground**.
8	1	3	IORDY	I[1]	Input	**ATA Control**.
9	2	4	DMARQ	I[1]	Input	**ATA Control**.
N/A	N/A	5 6 7 8	GND			**Ground**.
10	3	9	AV_{CC}	PWR		**Analog V_{CC}**. Connect to V_{CC} through the shortest path possible.
11	4	10	XTALOUT	Xtal	Xtal	**24-MHz Crystal Output** (see section 5.3.3).
12	5	11	XTALIN	Xtal	Xtal	**24-MHz Crystal Input** (see section 5.3.3).
13	6	12	AGND	GND		**Analog Ground**. Connect to ground with as short a path as possible.
N/A	N/A	13 14 15	NC			**No Connect**.
14	7	16	V_{CC}	PWR		**V_{CC}**. Connect to 3.3V power source.
15	8	17	DPLUS	I/O	Hi-Z	**USB D+ Signal** (see section 5.3.1).
16	9	18	DMINUS	I/O	Hi-Z	**USB D– Signal** (see section 5.3.1).
17	10	19	GND	GND		**Ground**.
18	11	20	V_{CC}	PWR		**V_{CC}**. Connect to 3.3V power source.
19	12	21	GND	GND		**Ground**.
N/A	N/A	22	SYSIRQ	I	Input	**Active HIGH**. USB interrupt request (see section 5.3.4). Tie to GND if functionality is not used.
N/A	N/A	23 24 25	GND	GND		**Ground**.
20	13[3]	26[3]	PWR500#[2] (*PU 10K*)	I/O		**Active LOW**. VBUS power granted indicator used in bus-powered designs (see section 5.3.11). **Alternate Function** for 68320.
21	14	27	GND (*RESERVED*)			**Reserved**. Tie to GND.

Notes:
1. If byte 8, bit 4 of the EEPROM is set to '0', the ATA interface pins are only active when VBUS_ATA_EN is asserted. See section 5.3.9.
2. A '#' sign after the pin name indicates that it is active LOW.
3. The General Purpose inputs can be enabled on ATAPUEN, PWR500#, and DRVPWRVLD via EEPROM byte 8, bit 7 on CY7C68320/CY7C68321.

Table 5-1. AT2LP Pin Descriptions
Note: (Italics pin names denote pin functionality during CY7C68300A-compatibility mode) (continued)

56 SSOP	56 QFN	100 TQFP	Pin Name	Pin Type	Default State at Start-up	Pin Description
N/A	N/A	28	NC			**No Connect**.
22	15	29	SCL	O	Active for several ms at start-up.	**Clock signal for I²C interface** (see section 5.3.2).
23	16	30	SDA	I/O		**Data signal for I²C interface** (see section 5.3.2).
N/A	N/A	31 32	NC			**No Connect**.
24	17	33	V_{CC}	PWR		**V_{CC}**. Connect to 3.3V power source.
25	18	34	DD0	I/O[1]	Hi-Z	**ATA Data bit 0**.
26	19	35	DD1	I/O[1]	Hi-Z	**ATA Data bit 1**.
27	20	36	DD2	I/O[1]	Hi-Z	**ATA Data bit 2**.
28	21	37	DD3	I/O[1]	Hi-Z	**ATA Data bit 3**.
N/A	N/A	38	V_{CC}	PWR		**V_{CC}**. Connect to 3.3V power source.
N/A	N/A	39	GND	GND		**Ground**.
N/A	N/A	40	NC	NC		**No Connect**.
N/A	N/A	41	GND			**Ground**.
N/A	N/A	42	NC	NC		**No Connect**.
N/A	N/A	43	GND			**Ground**.
29	22	44	DD4	I/O[1]	Hi-Z	**ATA Data bit 4**.
30	23	45	DD5	I/O[1]	Hi-Z	**ATA Data bit 5**.
31	24	46	DD6	I/O[1]	Hi-Z	**ATA Data bit 6**.
32	25	47	DD7	I/O[1]	Hi-Z	**ATA Data bit 7**.
33	26	48	GND	GND		**Ground**.
34	27	49	V_{CC}	PWR		**V_{CC}**. Connect to 3.3V power source.
35	28	50	GND	GND		**Ground**.
N/A	N/A	51 52	NC	NC		**No Connect**.
N/A	N/A	53	V_{CC}	PWR		**V_{CC}**. Connect to 3.3V power source.
36	29	54	DIOW#[2]	O/Z[1]	Driven HIGH (CMOS)	**ATA Control**.
37	30	55	DIOR#	O/Z[1]	Driven HIGH (CMOS)	**ATA Control**.
38	31	56	DMACK#	O/Z[1]	Driven HIGH (CMOS)	**ATA Control**.
N/A	N/A	57	NC	NC		**No Connect**.
N/A	N/A	58	LOWPWR#	O		**USB suspend indicator** (see section 5.3.7). '0' = Chip active. VBUS power draw governed by PWR500# pin. 'Hi-Z' = Chip suspend. VBUS system current limited to USB suspend mode value.
N/A	N/A	59 60 61	NC	NC		**No Connect.**
N/A	N/A	62	VBUSPWRD	I	Input	**Bus-powered operation selector**. Used in systems that are capable of being bus or self-powered to indicate the current power mode.
N/A	N/A	63 64	NC	NC		**No Connect**.
N/A	N/A	65	GND	GND		**Ground**.

Table 5-1. AT2LP Pin Descriptions
Note: (Italics pin names denote pin functionality during CY7C68300A-compatibility mode) (continued)

56 SSOP	56 QFN	100 TQFP	Pin Name	Pin Type	Default State at Start-up	Pin Description
39	32	66	V_{CC}	PWR		**V_{CC}**. Connect to 3.3V power source.
40	33	67	INTRQ	I[1]	Input	**ATA Interrupt request**.
41	34	68	DA0	O/Z[1]	Driven HIGH after 2 ms delay	**ATA Address**.
42	35	69	DA1	O/Z[1]	Driven HIGH after 2 ms delay	**ATA Address**.
43	36[3]	70[3]	DRVPWRVLD (*DA2*)	I	Input	**Device Presence Detect** (see section 5.3.5). Configurable polarity, controlled by EEPROM address 0x08. This pin must be connected to GND if functionality is not utilized. **Alternate Function**: Input when the EEPROM configuration byte 8 has bit 7 set to one. The input value is reported through EP1IN (byte 0, bit 0).
44	37	71	CS0#	O/Z[1]	Driven HIGH after 2 ms delay	**ATA Chip Select**.
45	38	72	CS1#	O/Z[1]	Driven HIGH after 2 ms delay	**ATA Chip Select**.
46	39	73	DA2 (*VBUS_PWR_VALID*)	O/Z[1]	Driven HIGH after 2 ms delay	**ATA Address**.
47	40	74	ARESET#	O/Z[1]		**ATA Reset**.
48	41	75	GND	GND		**Ground**.
N/A	N/A	76	NC	NC		**No Connect**.
49	42	77	RESET#	I	Input	**Chip Reset** (see section 5.3.13). This pin is normally tied to V_{CC} through a 100K resistor, and to GND through a 0.1-µF capacitor, supplying a 10-ms reset.
50	43	78	V_{CC}	PWR		**V_{CC}**. Connect to 3.3V power source.
51	44	79	VBUS_ATA_ENABLE (*ATA_EN*)	I	Input	**VBUS detection** (see section 5.3.9). Indicates to the CY7C68300B/CY7C68301B that VBUS power is present.
52	45	80	DD8	I/O[1]	Hi-Z	**ATA Data bit 8**.
53	46	81	DD9	I/O[1]	Hi-Z	**ATA Data bit 9**.
54	47	82	DD10	I/O[1]	Hi-Z	**ATA Data bit 10**.
55	48	83	DD11	I/O[1]	Hi-Z	**ATA Data bit 11**.
N/A	N/A	84	GND			**Ground**.
N/A	N/A	85	V_{CC}	PWR		**V_{CC}**. Connect to 3.3V power source.
N/A	N/A	86 87	NC	NC		**No Connect**.
N/A	36[3] 13[3] 54[3]	88 89 90 91 92 93	GPIO0 GPIO1 GPIO2_nHS GPIO3 GPIO4 GPIO5	I/O[3]		**General purpose I/O pins** (see section 5.3.6). The GPIO pins must be tied to GND if functionality is not utilized. If the hs_indicator config bit is set, the GPIO2_nHS pin will reflect the operating speed: '1' = full-speed operation. '0' = high-speed operation.
N/A	N/A	94	GND	GND		**Ground**.
56	49	95	DD12	I/O[1]	Hi-Z	**ATA Data bit 12**.

5.3 Additional Pin Descriptions

5.3.1 DPLUS, DMINUS

DPLUS and DMINUS are the USB signaling pins; they should be tied to the D+ and D– pins of the USB connector. Because they operate at high frequencies, the USB signals require special consideration when designing the layout of the PCB. See section 15.0 for PCB layout recommendations. When RESET# is released, the internal pull-up on D+ is controlled by VBUS_ATA_ENABLE. When VBUS_ATA_ENABLE is HIGH, D+ is pulled up.

5.3.2 SCL, SDA

The clock and data pins for the I^2C port should be connected to the configuration EEPROM and to 2.2K pull-up resistors tied to V_{CC}. The SCL and SDA pins are active for several milliseconds at start-up.

5.3.3 XTALIN, XTALOUT

The AT2LP requires a 24-MHz (±100ppm) signal to derive internal timing. Typically, a 24-MHz (20-pF, 500-µW, parallel-resonant fundamental mode) crystal is used, but a 24-MHz square wave from another source can also be used. If a crystal is used, connect its pins to XTALIN and XTALOUT, and also through 12-pF capacitors to GND as shown in *Figure 5-6*. If an alternate clock source is used, apply it to XTALIN and leave XTALOUT open.

5.3.4 SYSIRQ

The SYSIRQ pin provides a way for systems to request service from host software by using the USB Interrupt pipe. If the AT2LP has no pending interrupt data to return, USB interrupt pipe data requests are NAKed. If pending data is available, the AT2LP returns 16 bits of data; this data indicates the HS_MODE signal (that indicates whether AT2LP is operating in high-speed or full-speed), the VBUSPWRD pin, and the GPIO pins. *Table 5-2* gives the bitmap for the data returned on the interrupt pipe and *Figure 5-7* depicts the latching algorithm incorporated by AT2LP.

The SYSIRQ pin must be tied low if the HID function is used (refer to *Section 6.0*).

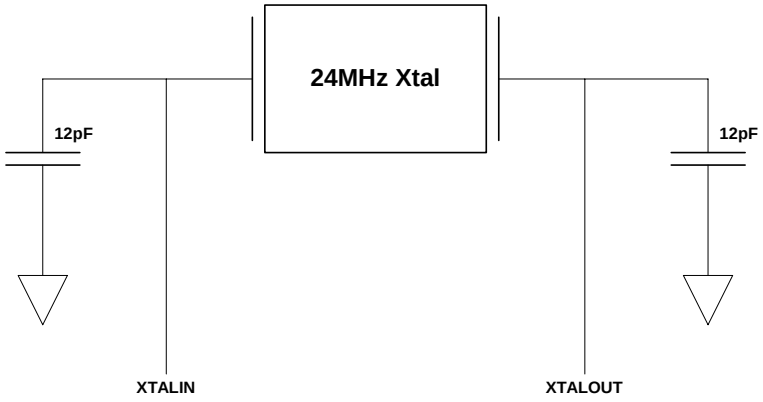

Figure 5-6. XTALIN / XTALOUT Diagram

Table 5-2. USB Interrupt Pipe Data Bitmap

USB Interrupt Data Byte 1								USB Interrupt Data Byte 0							
7	6	5	4	3	2	1	0	7	6	5	4	3	2	1	0
RESERVED	RESERVED	RESERVED	RESERVED	RESERVED	RESERVED	USB High-Speed	VBUSPWRD	RESERVED	RESERVED	GPIO[5]	GPIO[4]	GPIO[3]	GPIO[2]	GPIO[1]	GPIO[0]

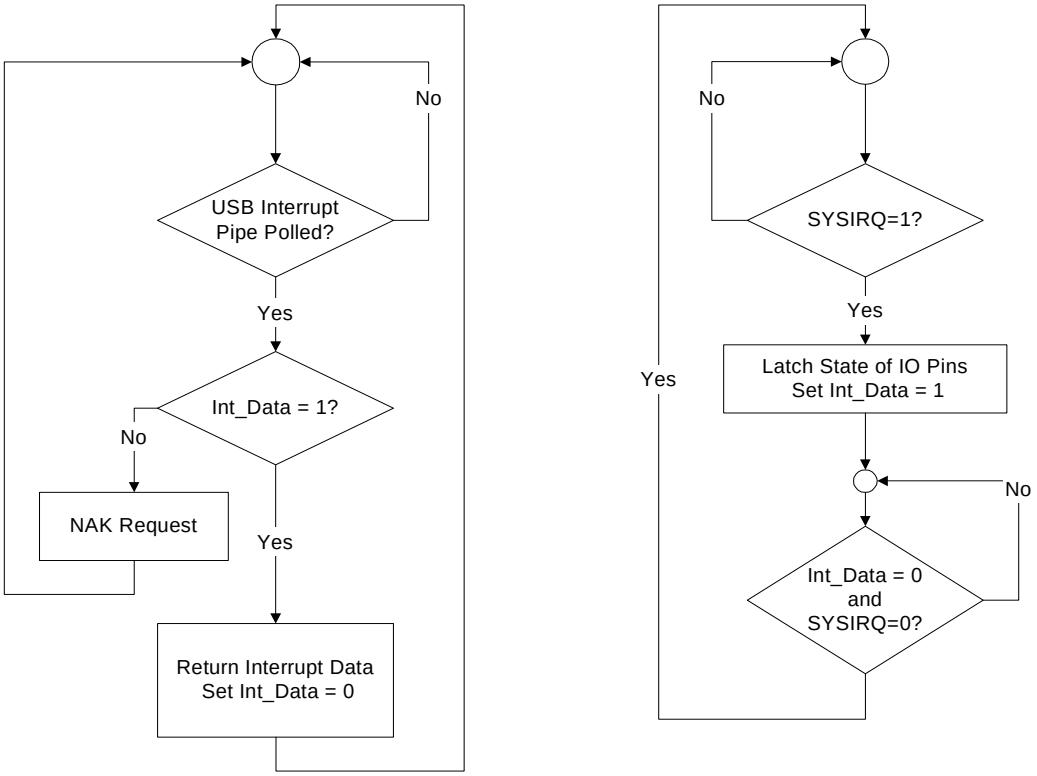

Figure 5-7. SYSIRQ Latching Algorithm

5.3.5 DRVPWRVLD

When this pin is enabled via EEPROM byte 8, bit 0, the AT2LP will inform the host that a removable device, such as a CF card, is present. The CY7C68300B/CY7C68301B will use DRVPWRVLD to detect that the removable device is present. Pin polarity is controlled by bit 1 of EEPROM address 8. When DRVPWRVLD is deasserted, the AT2LP will report a “no media present” status (ASC = 0x3A, ASQ = 0x00) to the host. When the media has been detected again, the AT2LP will report a “media changed” status to the host (ASC = 0x28, ASQ = 0x00).

When a removable device is used, it is always the master device. Only one removable device may be attached to the AT2LP. If the system only contains a removable device, EEPROM byte 8, bit 6 must be set to ‘0’ to disable ATA device detection at start-up. If a non-removable device is connected in addition to a removable media device, it must be configured as a slave (device address 1).

DRVPWRVLD can also be configured as an input. See *Section 6.0 HID Functions for Button Controls*.

5.3.6 GPIO Pins

The GPIO pins allow for a general purpose Input/Output interface. There are several different interfaces to the GPIO pins:

- Configuration bytes 0x09 and 0x0A contain the default settings for the GPIO pins.
- The host can modify the settings of the GPIO pins during operation. This is done with vendor-specific commands described in Section 8.6.
- The status of the GPIO pins is also returned on the interrupt endpoint (EP1) in response to a SYSIRQ. See section 5.3.3 for SYSIRQ details.

GPIO2_nHS also has an alternate function. If the “HS Indicator Enable” configuration (bit 2 of EEPROM address 8) is set, the GPIO2_nHS pin will reflect the operating speed of the device (full- or high-speed USB).

5.3.7 LOWPWR#

LOWPWR# is an output pin that is driven to ‘0’ when the AT2LP is active. LOWPWR# is placed in Hi-Z when the AT2LP is in a suspend state.

5.3.8 ATA Interface Pins

Design practices for signal integrity as outlined in the ATA/ATAPI-6 Specification should be followed with systems that utilize a ribbon cable interconnect between the CY7C68300B/CY7C68301B’s ATA interface and the attached ATA/ATAPI device, especially if Ultra DMA Mode is utilized.

5.3.9 VBUS_ATA_ENABLE

VBUS_ATA_ENABLE is typically used to indicate to the AT2LP that power is present on VBUS. This pin is polled by the AT2LP at start-up and then every 20ms thereafter. If this pin is ‘1’, the internal 1.5K pull-up is attached to D+. If this pin is ‘0’, the AT2LP will release the pull-up on D+ as required by the USB specification. Also, If EEPROM byte 8, bit 4 is ‘0’, the ATA interface pins will be placed in a high impedance (Hi-Z) state when VBUS_ATA_ENABLE is ‘0’. If EEPROM byte 8, bit 4 is ‘1’, the ATA interface pins will still be driven when VBUS_ATA_ENABLE is ‘0’.

5.3.10 ATAPUEN

This output controls the required host pull-up resistors on the ATA interface. ATAPUEN is driven to '0' when the ATA bus is inactive. ATAPUEN is driven to '1' when the ATA bus is active. ATAPUEN is set to a Hi-Z state along with all other ATA interface pins if VBUS_ATA_ENABLE is deasserted and the ATA_EN functionality (EEPROM byte 8, bit 4) is enabled. ATAPUEN can also be configured as an input. See *Section 6.0 HID Functions for Button Controls*

5.3.11 PWR500#

The AT2LP asserts PWR500# to indicate that VBUS current may be drawn up to the limit specified by the bMaxPower field of the USB configuration descriptors. In the 100-pin package, PWR500# will only be asserted if VBUSPWRD and DRVPWRVLD are also asserted. In the 56-pin package, PWR500# only functions during bus-powered operation. If the AT2LP enters a low-power state, PWR500# is deasserted. When normal operation is resumed, PWR500# is restored accordingly. Naturally, the PWR500# pin should never be used to control power sources for the AT2LP. In the 68320 parts, PWR500# can also be configured as an input. If the Drive Power Valid Enable bit is set (EEPROM byte 8, bit 1), PWR500# will ONLY be driven when Drive Power Valid is active. See *Section 6.0 HID Functions for Button Controls*.

5.3.12 VBUSPWRD

Some devices have the ability to be either self-powered or bus-powered. The VBUSPWRD input pin enables these devices to change between self-powered to bus-powered modes by changing the contents of the bMaxPower field and the self-powered bit in the configuration descriptor.

Note that current host drivers do not poll the device for this information, so this pin is only effective on a USB or power-up reset.

Table 5-3. Bus-Power Description

VBUSPWRD value	1	0	Not present (56-pin)
PWR500#	1 when Config = 0 0 when Config = 1	1	1 when Config = 0 0 when Config = 1
bMaxPower	250 (500mA)	1 (2mA)	EEPROM value used
bmAttributes bit 6	0	1	EEPROM value used

5.3.13 RESET#

Asserting RESET# for 10 ms will reset the entire chip. This pin is normally tied to V_{CC} through a 100k resistor, and to GND through a 0.1-µF capacitor, as shown in the figure below.

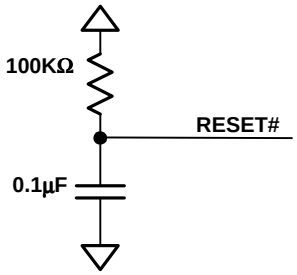

Figure 5-8. Typical Reset Circuit

Cypress does not recommend an RC reset circuit for bus-powered devices. See the application note *EZ-USB FX2™/AT2™/SX2™ Reset and Power Considerations* at www.cypress.com for more information.

6.0 HID Functions for Button Controls

Cypress' CY7C68320/CY7C68321 introduces the capability to support Human Interface Device (HID) signaling to the host for such functions as buttons. The ability to add buttons to a mass storage solution opens new applications for backup and other device-side notification to the host.

Optional HID functions can be added to the EEPROM descriptors by setting bit 7 of byte 8 of the EEPROM to a value of '1'. When this bit is set, several pins adopt alternate functions for the 56-pin package. This allows the pins to be used as button inputs. If there is a HID descriptor in the EEPROM, these pins are polled by the hardware approximately every 17 ms. If a change is detected in the pin(s) state, a report is sent via EP1. The report format for byte 0 and byte 1 are shown in *Table 6-1*.

Table 6-1. EP1 Data Bitmap

EP1 Data Byte 1								EP1 Data Byte 0							
7	6	5	4	3	2	1	0	7	6	5	4	3	2	1	0
RESERVED	RESERVED	RESERVED	RESERVED	RESERVED	RESERVED	USB High-Speed	VBUSPWRD	DRVPWRVLD	GPIO[4]	GPIO[3]	GPIO[2]	GPIO[1]	GPIO[0]	ATAPUEN	PWR500#

7.0 Functional Overview

7.1 USB Signaling Speed

AT2LP operates at the following two of the three rates defined in the *USB Specification Revision 2.0* dated April 27, 2000:

- Full-speed, with a signaling bit rate of 12 Mbits/sec
- High-speed, with a signaling bit rate of 480 Mbits/sec.

AT2LP does not support the low-speed signaling rate of 1.5 Mbits/sec.

7.2 ATA Interface

The ATA/ATAPI port on the AT2LP is compatible with the *Information Technology–AT Attachment with Packet Interface–6 (ATA/ATAPI-6) Specification, T13/1410D Rev 2a*. The AT2LP supports both ATAPI packet commands as well as ATA commands (by use of ATA Command Blocks), as outlined in Section 7.2.1. Refer to the *USB Mass Storage Class (MSC) Bulk Only Transport (BOT)* Specification for information on Command Block formatting. Additionally, the AT2LP translates *ATAPI SFF-8070i* commands to ATA commands for seamless integration of ATA devices with generic Mass Storage Class BOT drivers.

7.2.1 ATA Command Block (ATACB)

The ATA Command Block (ATACB) functionality provides a means of passing ATA commands and ATA register accesses to the attached device for execution. ATACB commands are transferred in the Command Block Wrapper Command Block (CBWCB) portion of the Command Block Wrapper (CBW). The ATACB is distinguished from other command blocks by having the first two bytes of the command block match the bVSCBSignature and bVSCBSubCommand values that are defined in *Table 7-1*. Only command blocks that have a valid bVSCBSignature and bVSCBSubCommand are interpreted as ATA Command Blocks. All other fields of the CBW and restrictions on the CBWCB remain as defined in the USB Mass Storage Class Bulk-Only Transport Specification. The ATACB must be 16 bytes in length. The following table and text defines the fields of the ATACB.

Table 7-1. ATACB Field Descriptions

Byte	Field Name	Field Description
0	bVSCBSignature	This field indicates to the CY7C68300B/CY7C68301B that the ATACB contains a vendor-specific command block. This value of this field must match the value in EEPROM address 0x04 for this vendor-specific command to be recognized.
1	bVSCBSubCommand	This field must be set to 0x24 for ATACB commands.
2	bmATACBActionSelect	This field controls the execution of the ATACB according to the bitfield values:
		Bit 7 *IdentifyPacketDevice* – This bit indicates that the data phase of the command will contain ATAPI (0xA1) or ATA (0xEC) IDENTIFY device data. Setting IdentifyPacketDevice when the data phase does not contain IDENTIFY device data will result in unspecified device behavior. 0 = Data phase does not contain IDENTIFY device data 1 = Data phase contains ATAPI or ATA IDENTIFY device data
		Bit 6 *UDMACommand* – This bit enables supported UDMA device transfers. Setting this bit when a non-UDMA capable device is attached will result in undetermined behavior. 0 = Do not use UDMA device transfers (only use PIO mode) 1 = Use UDMA device transfers
		Bit 5 *DEVOverride* – This bit determines whether the DEV bit value is taken from the value assigned to the LUN during start-up or from the ATACB. 0 = The DEV bit will be taken from the value assigned to the LUN during start-up 1 = The DEV bit will be taken from the ATACB field 0x0B, bit 4
		Bit 4 *DErrorOverride* – This bit controls the device error override feature. This bit should not be set during a bmATACBActionSelect TaskFileRead. 0 = Data accesses are halted if a device error is detected 1 = Data accesses are not halted if a device error is detected
		Bit 3 *PErrorOverride* – This bit controls the phase error override feature. This bit should not be set during a bmATACBActionSelect TaskFileRead. 0 = Data accesses are halted if a phase error is detected 1 = Data accesses are not halted if a phase error is detected
		Bit 2 *PollAltStatOverride* – This bit determines whether or not the Alternate Status register will be polled and the BSY bit will be used to qualify the ATACB operation. 0 = The AltStat register will be polled until BSY=0 before proceeding with the ATACB operation 1 = The ATACB operation will be executed without polling the AltStat register.

Table 7-1. ATACB Field Descriptions (continued)

Byte	Field Name	Field Description
		Bit 1 *DeviceSelectionOverride* – This bit determines when the device selection will be performed in relation to the command register write accesses. 0 = Device selection will be performed prior to command register write accesses 1 = Device selection will be performed following command register write accesses
		Bit 0 *TaskFileRead* – This bit determines whether or not the taskfile register data selected in bmATACBRegisterSelect is returned. If this bit is set, the dCBWDataTransferLength field must be set to 8. 0 = Execute ATACB command and data transfer (if any) 1 = Only read taskfile registers selected in bmATACBRegisterSelect and return 0x00h for all others. The format of the 12 bytes of returned data is as follows: • Address offset 0x00 (0x3F6) – Alternate Status • Address offset 0x01 (0x1F1) – Features / Error • Address offset 0x02 (0x1F2) – Sector Count • Address offset 0x03 (0x1F3) – Sector Number • Address offset 0x04 (0x1F4) – Cylinder Low • Address offset 0x05 (0x1F5) – Cylinder High • Address offset 0x06 (0x1F6) – Device / Head • Address offset 0x07 (0x1F7) – Command / Status
3	bmATACBRegisterSelect	This field controls which of the taskfile register read or write accesses occur. Taskfile read data will always be 8 bytes in length, and unselected register data will be returned as 0x00. Register accesses occur in sequential order as outlined below (0 to 7).
		Bit 0 *(0x3F6)* Device Control / Alternate Status
		Bit 1 *(0x1F1)* Features / Error
		Bit 2 *(0x1F2)* Sector Count
		Bit 3 *(0x1F3)* Sector Number
		Bit 4 *(0x1F4)* Cylinder Low
		Bit 5 *(0x1F5)* Cylinder High
		Bit 6 *(0x1F6)* Device / Head
		Bit 7 *(0x1F7)* Command / Status
4	bATACBTransferBlockCount	This value indicates the maximum requested block size in 512-byte increments. This value must be set to the last value used for the “Sectors per block” in the SET_MULTIPLE_MODE command. Legal values are 0, 1, 2, 4, 8, 16, 32, 64, and 128 where 0 indicates 256 sectors per block. A command failed status will be returned if an illegal value is used in the ATACB.
5–12	bATACBTaskFileWriteData	These bytes contain ATA register data used with ATA command or PIO write operations. Only registers selected in bmATACBRegisterSelect are required to hold valid data when accessed. The registers are as follows.
		ATACB Address Offset 0x05 *(0x3F6)* – Device Control
		ATACB Address Offset 0x06 *(0x1F1)* – Features
		ATACB Address Offset 0x07 *(0x1F2)* – Sector Count
		ATACB Address Offset 0x08 *(0x1F3)* – Sector Number
		ATACB Address Offset 0x09 *(0x1F4)* – Cylinder Low
		ATACB Address Offset 0x0A *(0x1F5)* – Cylinder High
		ATACB Address Offset 0x0B *(0x1F6)* – Device
		ATACB Address Offset 0x0C *(0x1F7)* – Command
13–15	Reserved	These bytes must be set to 0x00 for ATACB commands.

8.0 Operating Modes

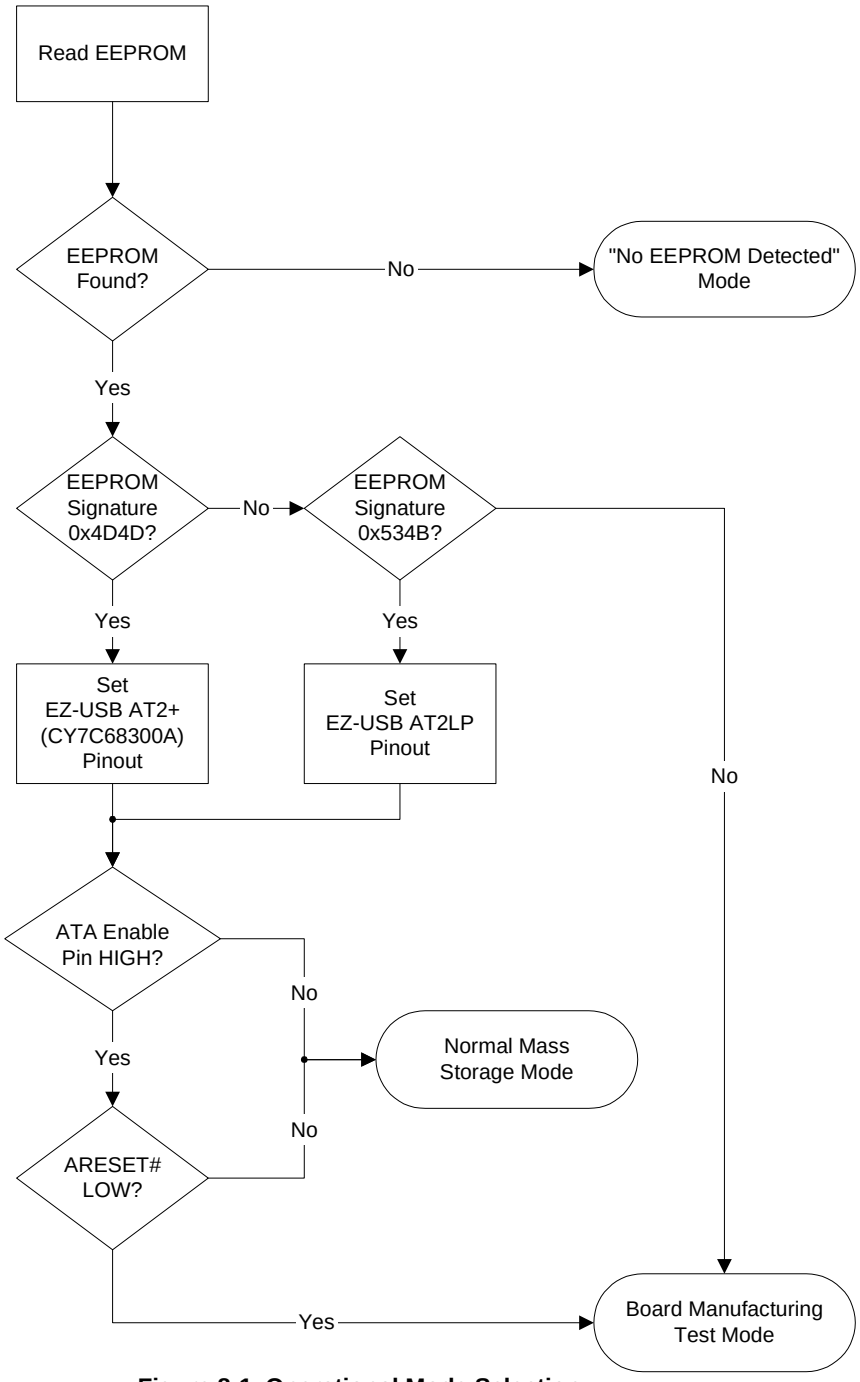

Figure 8-1. Operational Mode Selection

8.1 Operational Mode Selection Flow

During the power-up sequence, the AT2LP checks the I^2C port for an EEPROM and checks to see if the ATA connector is configured for Board Manufacturing Test Mode. AT2LP then selects an operating mode as shown below.

- If an I^2C EEPROM with a 0x4D4D signature is found, the CY7C68300B/CY7C68301B uses the same pinout and EEPROM format as the CY7C68300A (EZ-USB AT2).
- If the first two bytes of the EEPROM contain 0x534B the AT2LP uses the values stored in the EEPROM to configure the USB descriptors for normal operation.
- If no EEPROM is detected, the AT2LP uses a VID/PID of 0x00/0x00. This is not a valid mode of operation.
- If an invalid EEPROM signature is read, the AT2LP defaults into Board Manufacturing Test Mode.

There is an additional method available to put the AT2LP into Board Manufacturing Test Mode to allow reprogramming of

EEPROMs without an ATA/ATAPI device attached. If the ATA Reset (ARESET#) line is LOW on power-up, the AT2LP will enter Board Manufacturing Test Mode. A convenient way to pull the ARESET# line LOW is to short pins 1 and 3 on the ATA connector, which will tie the ARESET# line to the pull-down on DD7.

8.2 "No EEPROM Detected" Mode

When no EEPROM is detected at start-up, the AT2LP will enumerate with VID/PID/DID values that are all 0x00, which is not a valid mode of operation. These values can be factory programmed into the AT2LP for high-volume applications to avoid the need for an external EEPROM in some designs. Contact your local Cypress Semiconductor sales office for details.

8.3 Normal Mass Storage Mode

In Normal Mass Storage Mode, the chip behaves as a USB 2.0 to ATA/ATAPI bridge. This includes all typical USB device states (powered, configured, etc.). The USB descriptors are returned according to the values stored in the external EEPROM. An external EEPROM is required for Mass Storage Class Bulk-Only Transport compliance, since a unique serial number is required for each device. Also, Cypress requires customers to use their own Vendor and Product IDs for final products.

8.4 Board Manufacturing Test Mode

In Board Manufacturing Test Mode, the chip behaves as a USB 2.0 device but the ATA/ATAPI interface is not fully active. In this mode, the AT2LP allows for reading from and writing to the EEPROM, and for board level testing through vendor specific ATAPI commands utilizing the CBW Command Block as described in the USB *Mass Storage Class Bulk-Only Transport Specification*. There is a vendor-specific ATAPI command for the EEPROM access (CfgCB) and one for the board level testing (MfgCB).

8.4.1 CfgCB

The cfg_load and cfg_read vendor-specific commands are passed down through the bulk pipe in the CBWCB portion of the CBW. The format of this CfgCB is shown below. Byte 0 will be a vendor-specific command designator whose value is configurable and set in the configuration data (EEPROM address 0x04). Byte 1 must be set to 0x26 to identify CfgCB. Byte 2 is reserved and must be set to zero. Byte 3 is used to determine the memory source to write/read. For the CY7C68300B/CY7C68301B, this byte must be set to 0x02, indicating the EEPROM is present. Bytes 4 and 5 are used to determine the start address. For the CY7C68300B/301B, this must always be 0x0000. Bytes 6 through 15 are reserved and must be set to zero.

The data transferred to the EEPROM must be in the format specified in *Table 8-6* of this data sheet. Maximum data transfer size is 255 bytes.

The data transfer length is determined by the CBW Data Transfer Length specified in bytes 8 through 11 (dCBWDataTransferLength) of the CBW (refer to *Table 8-1*). The type/direction of the command will be determined by the direction bit specified in byte 12, bit 7 (bmCBWFlags) of the CBW (refer to *Table 8-1*).

Table 8-1. Command Block Wrapper

	Bits							
Offset	**7**	**6**	**5**	**4**	**3**	**2**	**1**	**0**
0–3	DCBWSignature							
4–7	dCBWTag							
8–11 (08h–0Bh)	dCBWDataTransferLength							
12 (0Ch)	bwCBWFLAGS							
	Dir	Obsolete	Reserved (0)					
13 (0Dh)	Reserved (0)				bCBWLUN			
14 (0Eh)	Reserved (0)			bCBWCBLength				
15–30 (0Fh1Eh)	CBWCB (CfgCB or MfgCB)							

Table 8-2. Example CfgCB

Offset	CfgCB Byte Descriptions	Bits							
		7	**6**	**5**	**4**	**3**	**2**	**1**	**0**
0	bVSCBSignature (set in configuration bytes)	0	0	1	0	0	1	0	0
1	bVSCBSubCommand (must be 0x26)	0	0	1	0	0	1	1	0
2	Reserved (must be set to zero)	0	0	0	0	0	0	0	0
3	Data Source (must be set to 0x02)	0	0	0	0	0	0	1	0
4	Start Address (LSB) (must be set to zero)	0	0	0	0	0	0	0	0
5	Start Address (MSB) (must be set to zero)	0	0	0	0	0	0	0	0
6–15	Reserved (must be set to zero)	0	0	0	0	0	0	0	0

8.4.2 MfgCB

The mfg_load and mfg_read vendor-specific commands will be passed down through the bulk pipe in the CBWCB portion of the CBW. The format of this MFGCB is shown below. Byte 0 is a vendor-specific command designator whose value is configurable and set in the configuration data. Byte 1 must be 0x27 to identify MfgCB. Byte 2–15 are reserved and must be set to zero.

The data transfer length will be determined by the CBW Data Transfer Length specified in bytes 8 through 11 (dCBWDataTransferLength) of the CBW. The type/direction of the command is determined by the direction bit specified in byte 12, bit 7 (bmCBWFlags) of the CBW.

Table 8-3. Example MfgCB

Offset	MfgCB Byte Description	Bits							
		7	6	5	4	3	2	1	0
0	0 bVSCBSignature (set in configuration bytes)	0	0	1	0	0	1	0	0
1	1 bVSCBSubCommand (hardcoded 0x27)	0	0	1	0	0	1	1	1
2–15	2–15 Reserved (must be zero)	0	0	0	0	0	0	0	0

8.4.2.1 Mfg_load

During a mfg_load, the CY7C68300B/CY7C68301B goes into Manufacturing Test Mode. Manufacturing Test Mode is provided as a means to implement board or system level interconnect tests. During Manufacturing Test Mode operation, all outputs not directly associated with USB operation are controllable. Normal control of the output pins are disabled. Control of the select AT2LP IO pins and their three-state controls are mapped to the ATAPI data packet associated with this request. (See *Table 8-4* for an explanation of the required Mfg_load data format.) This requires a write of seven bytes. To exit Manufacturing Test Mode, a hard reset (RESET#) is required.

Table 8-4. Mfg_load Data Format

Byte	Bit(s)	Function
0	7	ARESET#
	6	Reserved
	5:4	CS#[1:0]
	3:1	DA[2:0]
	0	Reserved
1	7	DD[15:0] Three-state (0 = Hi-Z all DD pins, 1 = drive DD pins).
	3:6	Reserved
	2	DMACK#
	1	DIOR#
	0	DIOW#
2	7:0	DD[7:0]
3	7:0	DD[15:8]
4	7:6	Reserved
	5:0	GPIO Output Enable [5:0]
5	7:6	Reserved
	5:0	GPIO Output Data [5:0]
6	7:0	Reserved

8.4.2.2 Mfg_read

This USB request returns a “snapshot in time” of select AT2LP input pins. AT2LP input pins not directly associated with USB operation, can be sampled at any time during Manufacturing Test Mode operation. See *Table 8-5* for an explanation of the mfg_read data format. The data length shall always be eight bytes.

Table 8-5. Mfg_read Data Format

Byte	Bit(s)	Data
0	7	ARESET# (output value only)
	6	VBUS_ATA_ENABLE
	5:1	Reserved. This data should be ignored.
	0	INTRQ
1	7	DD[15:0] Three-state
	6	Reserved. This data should be ignored.
	5	Reserved. This data should be ignored.
	4	DMARQ
1	3	IORDY
	2:0	Reserved. This data should be ignored.
2	7:0	DD[7:0]
3	7:0	DD[15:8]
4	7:6	Reserved
	5:0	GPIO Output Enable [5:0]
5	7:6	Reserved
	5:0	GPIO Output Data [5:0]
6	7:0	Reserved. This data should be ignored.
7	7:0	Reserved. This data should be ignored.

8.5 EEPROM Organization

The contents of the 256-byte (2048-bit) I^2C EEPROM are arranged as follows. In *Table 8-6*, the column labeled “Required Contents” contains the values that must be used for proper operation of the AT2LP. The column labeled “Suggested Contents” contains suggested values for the bytes that are defined by the customer. Some values, such as the Vendor ID, Product ID and device serial number, must be customized to meet USB compliance. The “AT2LP blaster” tool on the CY4615B CD can be used to edit and program these values into an AT2LP-based product (refer to *Figure 8-2*). The “AT2LP primer” tool can be used to program AT2LP-based products in a manufacturing environment. See section 8.4 for details on how to use vendor-specific ATAPI commands to read and program the EEPROM.

The address pins on the serial EEPROM must be set such that the EEPROM is at address 2 (A0=0, A1=1, A2=0) or address 4 (A0=0, A1=0, A2=1) for memories that are internally byte-addressed memories.

Note: Devices running in Backward Compatibility Mode should use the 68300A EEPROM organization, and not the 68300B/301B/320/321 format shown in this document.

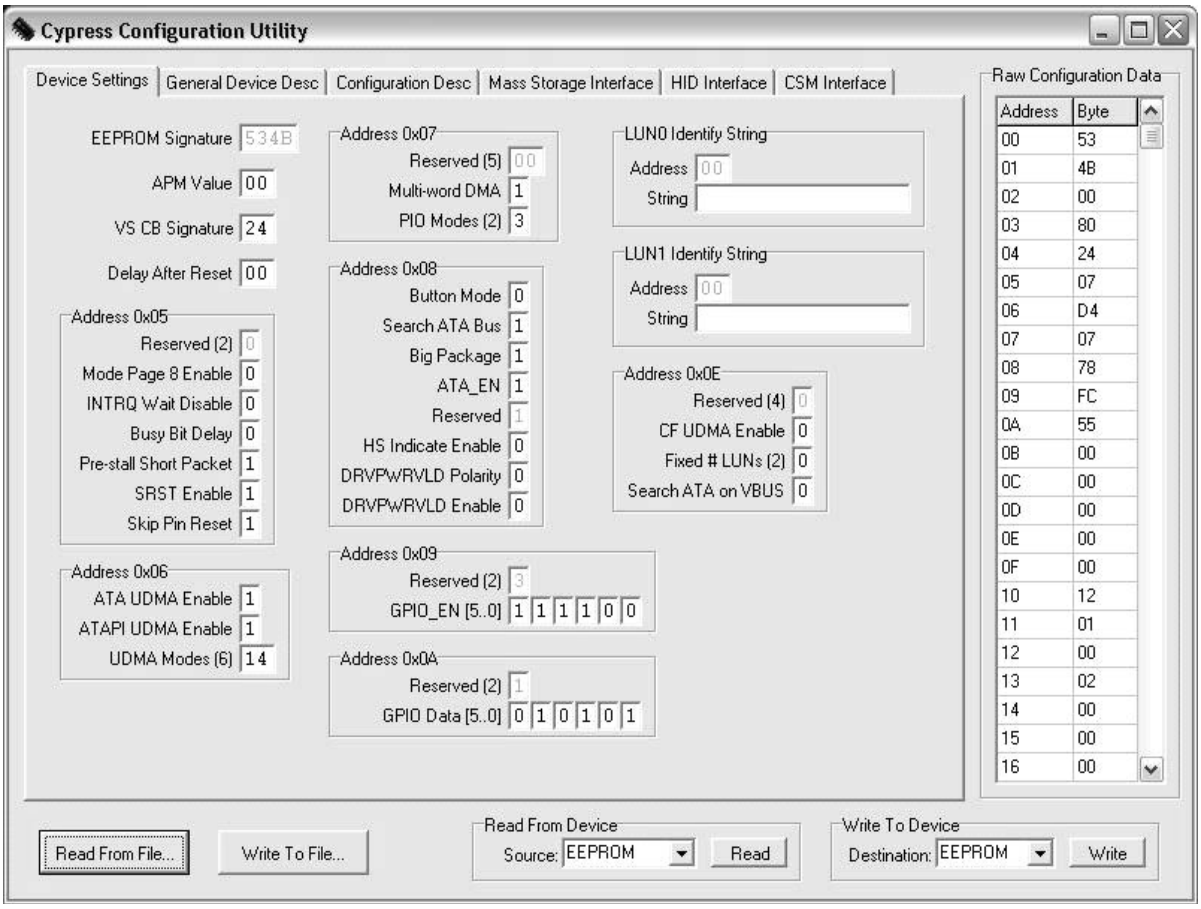

Figure 8-2. “AT2LP Blaster” Tool Screen

Table 8-6. EEPROM Organization

EEPROM Address	Field Name	Field Description	Required Contents	Suggested Contents
AT2LP Configuration				
0x00	I^2C EEPROM signature byte 0	I^2C EEPROM signature byte 0. This byte must be 0x53. For CY7C68300A compatibility mode, these bytes should be set to 0x4D4D.	0x53	
0x01	I^2C EEPROM signature byte 1	I^2C EEPROM signature byte 1. This byte must be 0x4B	0x4B	
0x02	APM Value	ATA Device Automatic Power Management Value. If an attached ATA device supports APM and this field contains other than 0x00, the AT2LP will issue a SET_FEATURES command to Enable APM with this value during the drive initialization process. Setting APM Value to 0x00 disables this functionality. This value is ignored with ATAPI devices.		0x00
0x03	Unused			0x80
0x04	bVSCBSignature Value	Value in the first byte of the CBW CB field that designates that the CB is to be decoded as vendor specific ATA commands instead of the ATAPI command block. See section 7.0 for more detail on how this byte is used.		0x24
0x05	Reserved	Bits (7:6)		0x07
	Enable mode page 8	Bit (5) Set to 1 to enable the write caching mode page (page 8). If this page is enabled, Windows will disable write caching by default which will limit write performance.		
	Disable wait for INTRQ	Bit (4) Set to 1 to poll status register rather than waiting for INTRQ. Setting this bit to 1 will improve USB BOT test results but may introduce compatibility problems with some devices.		
	BUSY Bit Delay	Bit (3) Enables a delay of up to 120 ms at each read of the DRQ bit where the device data length does not match the host data length. This allows the CY7C68300B/CY7C68301B to work with most devices that incorrectly clear the BUSY bit before a valid status is present.		
	Short Packet Before Stall	Bit (2) Determines if a short packet is sent prior to the STALL of an IN endpoint. The USB *Mass Storage Class Bulk-Only Specification* allows a device to send a short or zero-length IN packet prior to returning a STALL handshake for certain cases. Certain host controller drivers may require a short packet prior to STALL. 1 = Force a short packet before STALL. 0 = Don't force a short packet before STALL.		
	SRST Enable	Bit (1) Determines if the AT2LP is to do an SRST reset during drive initialization. At least one reset must be enabled. Do not set SRST to 0 and Skip Pin Reset to 1 at the same time. 1 = Perform SRST during initialization. 0 = Don't perform SRST during initialization.		
	Skip Pin Reset	Bit (0) Skip ARESET# assertion. When this bit is set, the AT2LP will bypass ARESET# during any initialization other than power up. Do not set SRST to 0 and Skip Pin Reset to 1 at the same time. 0 = Allow ARESET# assertion for all resets. 1 = Disable ARESET# assertion except for power-on reset cycles.		

Table 8-6. EEPROM Organization (continued)

EEPROM Address	Field Name	Field Description	Required Contents	Suggested Contents
0x06	ATA UDMA Enable	Bit (7) Enable Ultra DMA data transfer support for ATAPI devices. If enabled, and if the ATAPI device reports UDMA support for the indicated modes, the AT2LP will utilize UDMA data transfers at the highest negotiated rate possible. 0 = Disable ATA device UDMA support. 1 = Enable ATA device UDMA support.		0xD4
	ATAPI UDMA Enable	Bit (6) Enable Ultra DMA data transfer support for ATAPI devices. If enabled, and if the ATAPI device reports UDMA support for the indicated modes, the AT2LP will utilize UDMA data transfers at the highest negotiated rate possible. 0 = Disable ATAPI device UDMA support. 1 = Enable ATAPI device UDMA support.		
	UDMA Modes	Bit (5:0) These bits select which UDMA modes, if supported, are enabled. Setting to 1 enables. Multiple bits may be set. The AT2LP will operate in the highest enabled UDMA mode supported by the device. The AT2LP supports UDMA modes 2, 3, and 4 only. Bit Descriptions 5 Reserved. Must be set to 0. 4 Enable UDMA mode 4. 3 Reserved. Must be set to 0. 2 Enable UDMA mode 2. 1 Reserved. Must be set to 0. 0 Reserved. Must be set to 0.		
0x07	Reserved	Bits(7:3) Must be set to 0.		0x07
	Multiword DMA mode	Bit (2) This bit selects multi-word DMA. If this bit is set and the drive supports it, multi-word DMA is used.		
	PIO Modes	Bits(1:0) These bits select which PIO modes, if supported, are enabled. Setting to 1 enables. Multiple bits may be set. The AT2LP will operate in the highest enabled PIO mode supported by the device. The AT2LP supports PIO modes 0, 3, and 4 only. PIO mode 0 is always enabled by internal logic. Bit Descriptions 1 Enable PIO mode 4. 0 Enable PIO mode 3.		
0x08	Pin Configurations			0x78
	BUTTON_MODE	Bit (7) Button mode. Set this bit to 1 to enable ATAPUEN, PWR500# and DRVPWRVLD to become button inputs returned on bits 2, 1, and 0 of EP1IN		
	SEARCH_ATA_BUS	Bit (6) Enables a search performed at RESET to detect non-removable ATA and ATAPI devices. Systems with only a removable device (like CF readers) will set this bit to 0. Systems with one removable device and one non-removable device will set this bit to 1.		
	BIG_PACKAGE	Bit (5) Package Select. Set this bit to 1 when using the 100-pin device.		

Table 8-6. EEPROM Organization (continued)

EEPROM Address	Field Name	Field Description	Required Contents	Suggested Contents
	ATA_EN	Bit (4) ATA sharing enable. Allows ATA bus sharing with other host devices. If ATA_EN=1 the ATA interface will be driven when VBUS_ATA_ENABLE is LOW. If ATA_EN=0 the ATA interface will be placed into Hi-Z state whenever VBUS_ATA_ENABLE is LOW. '0' = ATA signals Hi-Z when VBUS_ATA_ENABLE is LOW. '1' = ATA signals driven when VBUS_ATA_ENABLE is LOW.		
	DISKRDY Polarity	Bit (3) DISKRDY active polarity. '0' = Active LOW polarity. '1' = Active HIGH polarity.		
	HS Indicator Enable	Bit (2) Enables GPIO2_nHS pin to indicate the current operating speed of the device (if output is enabled). '0' = Normal GPIO operation. '1' = High-speed indicator enable.		
	Drive Power Valid Polarity	Bit (1) Controls the polarity of DRVPWRVLD pin '0' = Active LOW ("connector ground" indication) '1' = Active HIGH (power indication from device)		
	Drive Power Valid Enable	Bit (0) Enable for the DRVPWRVLD pin. When this pin is enabled, the AT2LP will enumerate a removable IDE device (normally CompactFlash) as the master device. '0' = pin disabled (most systems) '1' = pin enabled (CompactFlash systems)		
0x09	Reserved General Purpose IO Pin Output Enable	Bits (7:6) Must be set to zero. Bits (5:0) GPIO[5:0] Hi-Z control. '0' = Output enabled (GPIO pin is an output). '1' = Hi-Z (GPIO pin is an input).		0x00
0x0A	Reserved General Purpose IO Pin Data	Bits (7:6) Must be set to zero. Bits (5:0) If the output enable bit is set, these bits select the value driven on the GPIO pins.		0x00
0x0B	Identify Device String Pointer LUN0	If this value is 00, the Identify Device data will be taken from the device. If this string is non-zero, it is used as a pointer to a 24 byte ASCII (non-Unicode) string in the EEPROM. This string will be used as the device identifier. This string is used by many operating systems as the user-visible name for the device.		0x00
0x0C	Identify Device String Pointer LUN1			0x00
0x0D	Delay after reset	Number of 20-ms ticks to wait between RESET and attempting to access the drive.		0x00
0x0E	Reserved Enable CF UDMA Fixed number of logical units = 2	Bits (7:4) Bit (3) '1' = Allow UDMA to be used with removable-media devices '0' = UDMA will not be used with removable-media devices Some CF devices will interfere with UDMA if the UDMA lines are connected to them. This bit tells the AT2LP if the UDMA lines are connected to the removable-media device. Bit (2) If bits 1 and 2 are both 0, the number of logical units will be determined by searching the ATA and CF buses for devices.		0x00

Table 8-6. EEPROM Organization (continued)

EEPROM Address	Field Name	Field Description	Required Contents	Suggested Contents
	Fixed number of logical units = 1 Search ATA on VBUS removed	Bit (1) If bits 1 and 2 are both 0, the number of logical units will be determined by searching the ATA and CF buses for devices. Bit (0) Search for ATA devices when VBUS returns. If this bit is set, the ATA bus will be searched for ATA devices every time AT2LP is plugged into a computer.		
0x0F	Reserved	Must be set to 0x00.	0x00	
Device Descriptor				
0x10	bLength	Length of device descriptor in bytes.	0x12	
0x11	bDescriptor Type	Descriptor type.	0x01	
0x12	bcdUSB (LSB)	USB Specification release number in BCD.	0x00	
0x13	bcdUSB (MSB)		0x02	
0x14	bDeviceClass	Device class.	0x00	
0x15	bDeviceSubClass	Device subclass.	0x00	
0x16	bDeviceProtocol	Device protocol.	0x00	
0x17	bMaxPacketSize0	USB packet size supported for default pipe.	0x40	
0x18	idVendor (LSB)	Vendor ID. Cypress's Vendor ID may only be used for evaluation purposes, and not in released products.		Your Vendor ID
0x19	idVendor (MSB)			
0x1A	idProduct (LSB)	Product ID.		Your Product ID
0x1B	idProduct (MSB)			
0x1C	bcdDevice (LSB)	Device release number in BCD LSB (product release number).		Your release number
0x1D	bcdDevice (MSB)	Device release number in BCD MSB (silicon release number).		
0x1E	iManufacturer	Index to manufacturer string. This entry must equal half of the address value where the string starts or 0x00 if the string does not exist.		0x53
0x1F	iProduct	Index to product string. This entry must equal half of the address value where the string starts or 0x00 if the string does not exist.		0x69
0x20	iSerialNumber	Index to serial number string. This entry must equal half of the address value where the string starts or 0x00 if the string does not exist. The USB *Mass Storage Class Bulk-Only Transport Specification* requires a unique serial number (in upper case, hexadecimal characters) for each device.		0x75
0x21	bNumConfigurations	Number of configurations supported. 1 for mass storage: 2 for HID: 3 for CSM		0x03
Device Qualifier				
0x22	bLength	Length of device descriptor in bytes.	0x0A	
0x23	bDescriptor	Type Descriptor type.	0x06	
0x24	bcdUSB (LSB)	USB Specification release number in BCD.	0x00	
0x25	bcdUSB (MSB)	USB Specification release number in BCD.	0x02	
0x26	bDeviceClass	Device class.	0x00	
0x27	bDeviceSubClass	Device subclass.	0x00	
0x28	bDeviceProtocol	Device protocol.	0x00	
0x29	bMaxPacketSize0	USB packet size supported for default pipe.	0x40	
0x2A	bNumConfigurations	Number of configurations supported.	0x01	

Table 8-6. EEPROM Organization (continued)

EEPROM Address	Field Name	Field Description	Required Contents	Suggested Contents
0x2B	bReserved	Reserved for future use. Must be set to zero.	0x00	
Configuration Descriptor				
0x2C	bLength	Length of configuration descriptor in bytes.	0x09	
0x2D	bDescriptorType	Descriptor type.	0x02	
0x2E	bTotalLength (LSB)	Number of bytes returned in this configuration. This includes the configuration descriptor plus all the interface and endpoint descriptors.	0x20	
0x2F	bTotalLength (MSB)		0x00	
0x30	bNumInterfaces	Number of interfaces supported.		0x01
0x31	bConfiguration Value	The value to use as an argument to Set Configuration to select the configuration. This value must be set to 0x01.	0x01	
0x32	iConfiguration	Index to the configuration string. This entry must equal half of the address value where the string starts, or 0x00 if the string does not exist.		0x00
0x33	bmAttributes	Device attributes for this configuration. Bit (7) Reserved. Must be set to 1. Bit (6) Self-powered. Must be set to 1. Bit (5) Remote wake-up. Must be set to 0. Bits (4–0) Reserved. Must be set to 0.	0xC0	
0x34	bMaxPower	Maximum power consumption for this configuration. Units used are mA*2 (i.e., 0x31 = 98 mA, 0xF9 = 498 mA). 0x00 reported for self-powered devices. **Note:** A value of 0x00 or 0x01 results in the 56-pin package configuring itself for self-powered mode, whereas a value greater than 0x01 results in the 56-pin package reporting itself as bus-powered. This is regardless of what address 0x33 is set to reflect in the 56-pin package.		0x01
Interface and Endpoint Descriptors				
Interface Descriptor				
0x35	bLength	Length of interface descriptor in bytes.	0x09	
0x36	bDescriptorType	Descriptor type.	0x04	
0x37	bInterfaceNumber	Interface number.	0x00	
0x38	bAlternateSetting	Alternate setting.	0x00	
0x39	bNumEndpoints	Number of endpoints.	0x02	
0x3A	bInterfaceClass	Interface class.	0x08	
0x3B	bInterfaceSubClass	Interface subclass.		0x06
0x3C	bInterfaceProtocol	Interface protocol.	0x50	
0x3D	iInterface	Index to first interface string. This entry must equal half of the address value where the string starts or 0x00 if the string does not exist.		0x00
USB Bulk Out Endpoint				
0x3E	bLength	Length of this descriptor in bytes.	0x07	
0x3F	bDescriptorType	Endpoint descriptor type.	0x05	
0x40	bEndpointAddress	This is an Out endpoint, endpoint number 2.	0x02	
0x41	bmAttributes	This is a bulk endpoint.	0x02	
0x42	wMaxPacketSize (LSB)	Max data transfer size. To be set by speed (Full speed 0x0040; High speed 0x0200)		0x00
0x43	wMaxPacketSize (MSB)			0x02
0x44	bInterval	High-speed interval for polling (maximum NAK rate). Set to zero for full speed.	0x00	

Table 8-6. EEPROM Organization (continued)

EEPROM Address	Field Name	Field Description	Required Contents	Suggested Contents
USB Bulk In Endpoint				
0x45	bLength	Length of this descriptor in bytes.	0x07	
0x46	bDescriptorType	Endpoint descriptor type.	0x05	
0x47	bEndpointAddress	This is an In endpoint, endpoint number 8.	0x88	
0x48	bmAttributes	This is a bulk endpoint.	0x02	
0x49	wMaxPacketSize (LSB)	Max data transfer size. Automatically set by AT2 (Full speed 0x0040; High speed 0x0200)		0x00
0x4A	wMaxPacketSize (MSB)			0x02
0x4B	bInterval	High-speed interval for polling (maximum NAK rate). Set to zero for full speed.	0x00	
(Optional) HID Interface Descriptor				
0x4C	bLength	Length of HID interface descriptor	0x09	
0x4D	bDescriptorTypes	Interface descriptor type	0x04	
0x4E	bInterfaceNumber	Number of interfaces (2)	0x02	
0x4F	bAlternateSetting	Alternate setting	0x00	
0x50	bNumEndpoints	Number of endpoints used by this interface	0x01	
0x51	bInterfaceClass	Class code	0x03	
0x52	bInterfaceSubClass	Sub class	0x00	
0x53	bInterfaceSubSubClass	sub sub class	0x00	
0x54	iInterface	Index of string descriptor	0x00	
USB Interrupt In Endpoint				
0x5E	bLength	Length of this descriptor in bytes.	0x07	
0x5F	bDescriptorType	Endpoint descriptor type.	0x05	
0x60	bEndpointAddress	This is an In endpoint, endpoint number 1.	0x81	
0x61	bmAttributes	This is an interrupt endpoint.	0x03	
0x62	wMaxPacketSize (LSB)	Max data transfer size.	0x02	
0x63	wMaxPacketSize (MSB)		0x00	
0x64	bInterval	Interval for polling (max. NAK rate).		0x10
(Optional) HID Descriptor				
0x55	bLength	Length of HID descriptor	0x09	
0x56	bDescriptorType	Descriptor Type HID	0x21	
0x57	bcdHID (LSB)	HID Class Specification release number (1.10)	0x10	
0x58	bcdHID (MSB)		0x01	
0x59	bCountryCode	Country Code	0x00	
0x5A	bNumDescriptors	Number of class descriptors (1 report descriptor)	0x01	
0x5B	bDescriptorType	Descriptor Type	0x22	
0x5C	wDescriptorLength (LSB)	Length of HID report descriptor	0x22	
0x5D	wDescriptorLength (MSB)		0x00	
Terminator Descriptors				
0x65	Terminator		0x00	
(Optional) HID Report Descriptor				
0x66	Usage_Page	Vendor defined - FFA0	0x06	
0x67			0xA0	
0x68			0xFF	

Table 8-6. EEPROM Organization (continued)

EEPROM Address	Field Name	Field Description	Required Contents	Suggested Contents
0x69	Usage	Vendor defined	0x09	
0x6A			0xA5	
0x6B	Collection	Application	0xA1	
0x6C			0x01	
0x6D	Usage	Vendor defined	0x09	
0x6E			0xA6	
Input Report				
0x6F	Usage	Vendor defined	0x09	
0x70			0xA7	
0x71	Logical_Minimum	–128	0x15	
0x72			0x80	
0x73	Logical_Maximum	127	0x25	
0x74			0x7F	
0x75	Report_Size	8 bits	0x75	
0x76			0x08	
0x77	Report_Count	2 fields	0x95	
0x78			0x02	
0x79	Input	Input (Data, Variable, Absolute)	0x81	
0x7A			0x02	
Output Report				
0x7B	Usage	Usage - vendor defined	0x09	
0x7C			0xA9	
0x7D	Logical_Minimum	Logical Minimum (-128)	0x15	
0x7E			0x80	
0x7F	Logical_Maximum	Logical Maximum (127)	0x25	
0x80			0x7F	
0x81	Report_Size	Report Size 8 bits	0x75	
0x82			0x08	
0x83	Report_Count	Report Count 2 fields	0x95	
0x84			0x02	
0x85	Output	Output (Data, Variable, Absolute	0x91	
0x86			0x02	
0x87		End Collection	0xC0	
(optional) Standard Content Security Interface Descriptor				
0x88	bLength	Byte length of this descriptor	0x09	
0x89	bDescriptorType	Interface Descriptor type	0x0D	
0x8A	bInterfaceNumber	Number of interface.	0x02	
0x8B	bAlternateSetting	Value used to select an alternate setting for the interface identified in prior field		
0x8C	bNumEndpoints	Number of endpoints used by this interface (excluding endpoint 0) that are CSM dependent	0x02	
0x8D	bInterfaceClass			0x0D
0x8E	bInterfaceSubClass	Must be set to zero	0x00	
0x8F	bInterfaceProtocol	Must be set to zero	0x00	
0x90	iInterface	Index of a string descriptor that describes this Interface		

Table 8-6. EEPROM Organization (continued)

EEPROM Address	Field Name	Field Description	Required Contents	Suggested Contents
Channel Descriptor				
0x91	bLength	Byte length of this descriptor	0x09	
0x92	bDescriptorType	channel descriptor type	0x22	
0x93	bChannelID	Number of the channel, must be a zero based value that is unique across the device		
0x94	bmAttributes	Bits(7:5) Must be set to 0.		
0x95		Bit (4:0) 0 = Not used 1 = Interface 2 = Endpoint 3...31 = Reserved values		
0x96	bRecipient	Identifier of the target recipient If Recipient type field of bmAttributes = 1 then bRecipient field is the bInterfaceNumber If Recipient type field of bmAttributes = 2 then bRecipient field is an endpoint address, where: D7: Direction (0 = Out, 1 = IN) D6...D4: reserved and set to zero D3...D0: Endpoint number		
0x97	bRecipientAlt	alternate setting for the interface to which this channel applies	0x00	
0x98	bRecipientLogicalUnit	Recipient Logical Unit		
0x99	bMethod	Index of a class-specific CSM descriptor That describes one of the Content Security Methods (CSM) offered by the device		
0x9A	bMethodVariant	CSM Variant descriptor		
CSM Descriptor				
0x9B	bLength	Byte length of this descriptor	0x06	
0x9C	bDescriptorType	CSM Descriptor type	0x23	
0x9D	bMethodID	Index of a class-specific CSM descriptor that describes on of the Content Security Methods offered by the device.	0x01	
0x9E	iCSMDescriptor	Index of string descriptor that describes the Content Security Method		
0x9F	bcdVersion (LSB)	CSM Descriptor Version number	0x10	
0xA0	bcsVersion (MSB)		0x02	
0xA1	Terminator		0x00	
USB String Descriptor–Index 0 (LANGID)				
0xA2	bLength	LANGID string descriptor length in bytes.	0x04	
0xA3	bDescriptorType	Descriptor type.	0x03	
0xA4	LANGID (LSB)	Language supported. The CY7C68300B supports one LANGID value.		0x09
0xA5	LANGID (MSB)			0x04
USB String Descriptor–Manufacturer				
0xA6	bLength	String descriptor length in bytes (including bLength).		0x2C
0xA7	bDescriptorType	Descriptor type.	0x03	
0xA8	bString	Unicode character LSB.		“C” 0x43
0xA9	bString	Unicode character MSB.		0x00
0xAA	bString	Unicode character LSB.		“y” 0x79
0xAB	bString	Unicode character MSB.		0x00

Table 8-6. EEPROM Organization (continued)

EEPROM Address	Field Name	Field Description	Required Contents	Suggested Contents
0xAC	bString	Unicode character LSB.		“p” 0x70
0xAD	bString	Unicode character MSB.		0x00
0xAE	bString	Unicode character LSB.		“r” 0x72
0xAF	bString	Unicode character MSB.		0x00
0xB0	bString	Unicode character LSB.		“e” 0x65
0xB1	bString	Unicode character MSB.		0x00
0xB2	bString	Unicode character LSB.		“s” 0x73
0xB3	bString	Unicode character MSB.		0x00
0xB4	bString	Unicode character LSB.		“s” 0x73
0xB5	bString	Unicode character MSB.		0x00
0xB6	bString	Unicode character LSB.		“ ” 0x20
0xB7	bString	Unicode character MSB.		0x00
0xB8	bString	Unicode character LSB.		“S” 0x53
0xB9	bString	Unicode character MSB.		0x00
0xBA	bString	Unicode character LSB.		“e” 0x65
0xBB	bString	Unicode character MSB.		0x00
0xBC	bString	Unicode character LSB.		“m” 0x6D
0xBD	bString	Unicode character MSB.		0x00
0xBE	bString	Unicode character LSB.		“i” 0x69
0xBF	bString	Unicode character MSB.		0x00
0xC0	bString	Unicode character LSB.		“c” 0x63
0xC1	bString	Unicode character MSB.		0x00
0xC2	bString	Unicode character LSB.		“o” 0x6F
0xC3	bString	Unicode character MSB.		0x00
0xC4	bString	Unicode character LSB.		“n” 0x6E
0xC5	bString	Unicode character MSB.		0x00
0xC6	bString	Unicode character LSB.		“d” 0x64
0xC7	bString	Unicode character MSB.		0x00
0xC8	bString	Unicode character LSB.		“u” 0x75
0xC9	bString	Unicode character MSB.		0x00
0xCA	bString	Unicode character LSB.		“c” 0x63
0xCB	bString	Unicode character MSB.		0x00
0xCC	bString	Unicode character LSB.		“t” 0x74
0xCD	bString	Unicode character MSB.		0x00
0xCE	bString	Unicode character LSB.		“o” 0x6F
0xCF	bString	Unicode character MSB.		0x00
0xD0	bString	Unicode character LSB.		“r” 0x72
0xD1	bString	Unicode character MSB.		0x00
USB String Descriptor–Product				
0xD2	bLength	String descriptor length in bytes (including bLength).		0x2C
0xD3	bDescriptorType	Descriptor type.	0x03	
0xD4	bString	Unicode character LSB.		“U” 0x55
0xD5	bString	Unicode character MSB.		0x00
0xD6	bString	Unicode character LSB.		“S” 0x53

Table 8-6. EEPROM Organization (continued)

EEPROM Address	Field Name	Field Description	Required Contents	Suggested Contents
0xD7	bString	Unicode character MSB.		0x00
0xD8	bString	Unicode character LSB.		“B” 0x42
0xD9	bString	Unicode character MSB.		0x00
0xDA	bString	Unicode character LSB.		“2” 0x32
0xDB	bString	Unicode character MSB.		0x00
0xDC	bString	Unicode character LSB.		“.” 0x2E
0xDD	bString	Unicode character MSB.		0x00
0xDE	bString	Unicode character LSB.		“0” 0x30
0xDF	bString	Unicode character MSB.		0x00
0xE0	bString	Unicode character LSB.		“ ” 0x20
0xE1	bString	Unicode character MSB.		0x00
0xE2	bString	Unicode character LSB.		“D” 0x53
0xE3	bString	Unicode character MSB.		0x00
0xE4	bString	Unicode character LSB.		“i” 0x74
0xE5	bString	Unicode character MSB.		0x00
0xE6	bString	Unicode character LSB.		“s” 0x6F
0xE7	bString	Unicode character MSB.		0x00
0xE8	bString	Unicode character LSB.		“k” 0x72
0xE9	bString	Unicode character MSB.		0x00
USB String Descriptor–Serial Number (**Note**: The USB Mass Storage Class specification requires a unique serial number in each device. Not providing a unique serial number can cause the operating system to crash. The serial number must be at least 12 characters, but some USB hosts will only treat the last 12 characters of the serial number as unique.)				
0xEA	bLength	String descriptor length in bytes (including bLength).		0x22
0XEB	bDescriptor Type	Descriptor type.	0x03	
0XEC	bString	Unicode character LSB.		“1” 0x31
0XED	bString	Unicode character MSB.		0x00
0XEE	bString	Unicode character LSB.		“2” 0x32
0XEF	bString	Unicode character MSB.		0x00
0XF0	bString	Unicode character LSB.		“3” 0x33
0xF1	bString	Unicode character MSB.		0x00
0xF2	bString	Unicode character LSB.		“4” 0x34
0xF3	bString	Unicode character MSB.		0x00
0xF4	bString	Unicode character LSB.		“5” 0x35
0xF5	bString	Unicode character MSB.		0x00
0xF6	bString	Unicode character LSB.		“6” 0x36
0xF7	bString	Unicode character MSB.		0x00
0xF8	bString	Unicode character LSB.		“7” 0x37
0xF9	bString	Unicode character MSB.		0x00
0xFA	bString	Unicode character LSB.		“8” 0x38
0xFB	bString	Unicode character MSB.		0x00
0xFC	bString	Unicode character LSB.		“9” 0x39
0xFD	bString	Unicode character MSB.		0x00
0xFE	bString	Unicode character LSB.		“0” 0x30
0xFF	bString	Unicode character MSB.		0x00

Table 8-6. EEPROM Organization (continued)

EEPROM Address	Field Name	Field Description	Required Contents	Suggested Contents
0X100	bString	Unicode character LSB.		“A” 0x41
0X101	bString	Unicode character MSB.		0x00
0X102	bString	Unicode character LSB.		“B” 0x42
0X103	bString	Unicode character MSB.		0x00
Identify Device String (**Note**: This is not a Unicode string. It is the ASCII string returned by the device in the Identify Device information. It is a fixed length (24 bytes). Changing this string may cause CD authoring software to incorrectly identify the device.)				
0X104	Device name byte 1	ASCII Character		“C” 0x43
0X105	Device name byte 2	ASCII Character		“y” 0x79
0X106	Device name byte 3	ASCII Character		“p” 0x70
0X107	Device name byte 4	ASCII Character		“r” 0x72
0X108	Device name byte 5	ASCII Character		“e” 0x65
0X109	Device name byte 6	ASCII Character		“s” 0x73
0X10A	Device name byte 7	ASCII Character		“s” 0x73
0X10B	Device name byte 8	ASCII Character		“ “ 0x20
0X10C	Device name byte 9	ASCII Character		“C” 0x43
0X10D	Device name byte 10	ASCII Character		“u” 0x75
0X10E	Device name byte 11	ASCII Character		“s” 0x73
0X10F	Device name byte 12	ASCII Character		“t” 0x74
0X110	Device name byte 13	ASCII Character		“o” 0x6f
0X111	Device name byte 14	ASCII Character		“m” 0x6d
0X112	Device name byte 15	ASCII Character		“ ” 0x20
0X113	Device name byte 16	ASCII Character		“N“ 0x4e
0X114	Device name byte 17	ASCII Character		“a“ 0x61
0X115	Device name byte 18	ASCII Character		“m“ 0x6d
0X116	Device name byte 19	ASCII Character		“e“ 0x65
0X117	Device name byte 20	ASCII Character		“ ” 0x20
0X118	Device name byte 21	ASCII Character		“L” 0x4c
0X119	Device name byte 22	ASCII Character		“U” 0x55
0X11A	Device name byte 23	ASCII Character		“N” 0x4e
0X11B	Device name byte 24	ASCII Character		“0” 0x30
0x11C to 0x1FF	Unused ROM Space	Amount of unused ROM space will vary depending on strings.		0xFF

Note: More than 0X100 bytes of configuration are shown for example only. AT2LP only supports 0X100 total bytes.

Table 8-7. EEPROM-related Vendor-specific Commands

Label	bmRequestType	bRequest	wValue	wIndex	wLength	Data
LOAD_CONFIG_DATA	0x40	0x01	0x0000	30x02 – 0x0F	Data Length	Configuration Data
READ_CONFIG_DATA	0xC0	0x02	Data Source	Starting Address	Data Length	Configuration Data

8.6 Programming the EEPROM

There are three methods to program the EEPROM:

- External device programmer
- USB commands listed in *Table 8-7*
- In-system programming on a bed-of-nails tester.

Any vendor-specific USB write request to the Serial ROM device configuration space will simultaneously update internal configuration register values as well. If the I^2C device is programmed without vendor specific USB commands, AT2LP must be synchronously reset (RESET#) before configuration data is reloaded.

The AT2LP supports a subset of the “slow mode” specification (100 KHz) required for 24LCXXB EEPROM family device support. Features such as “Multi-Master,” “Clock Synchronization” (the SCL pin is output only), “10-bit addressing,” and “CBUS device support” are not supported. Vendor-specific USB commands allow the AT2LP to address up to 256 bytes of data.

8.6.1 LOAD_CONFIG_DATA

This request enables configuration data writes to the AT2LP’s configuration space. The wIndex field specifies the starting address and the wLength field denotes the data length in bytes.

Legal values for wValue are as follows:

- 0x0000 Configuration bytes, address range 0x2 – 0xF
- 0x0002 External I^2C memory device

Configuration-byte writes must be constrained to addresses 0x2 through 0xF, as shown in *Table 8-7*. Attempts to write outside this address space will result in undefined operation. Configuration-byte writes only overwrite AT2LP Configuration Byte registers, the original data source (I^2C memory device) remains unchanged.

8.6.2 READ_CONFIG_DATA

This USB request allows data retrieval from the data source specified by the wValue field. Data is retrieved beginning at the address specified by the wIndex field. The wLength field denotes the length in bytes of data requested from the data source.

Legal values for wValue are as follows:

- 0x0000 Configuration bytes, addresses 0x0 – 0xF only
- 0x0002 External I^2C memory device

Illegal values for wValue will result in undefined operation. Attempted reads from an I^2C memory device when none is connected will result in undefined operation. Attempts to read configuration bytes with starting addresses greater than 0xF will also result in undefined operation.

9.0 Absolute Maximum Ratings

Storage Temperature ..... –65°C to +150°C

Ambient Temperature with Power Supplied ..... 0°C to +70°C

Supply Voltage to Ground Potential .....–0.5 V to +4.0 V

DC Input Voltage to Any Input Pin ..... 5.25 V

DC Voltage Applied to Outputs
in Hi-Z State..... –0.5 V to V_{CC} + 0.5 V

Power Dissipation..... 300 mW

Static Discharge Voltage..... > 2000 V

Max Output Current Per I/O Port
(D0-D7, D8-15, ATA control)..... 10 mA

10.0 Operating Conditions

T_A (Ambient Temperature Under Bias) ..... 0°C to +70°C

Supply Voltage .....+3.15V to +3.45V

Ground Voltage 0V

F_{osc} (Oscillator or Crystal Frequency) .... 24 MHz ± 100 ppm,
..... Parallel Resonant

11.0 DC Characteristics

Parameter	Description	Conditions	Min.	Typ.	Max.	Unit
V_{CC}	Supply Voltage		3.15	3.3	3.45	V
V_{CC} Ramp	Supply Ramp-up 0V to 3.3V		200			µs
V_{IH}	Input High Voltage		2		5.25	V
V_{IL}	Input Low Voltage		–0.5		0.8	V
I_I	Input Leakage Current	$0 < V_{IH} < V_{CC}$			±10	µA
V_{IH_X}	Crystal Input HIGH Voltage			2		5.25
V_{IL_X}	Crystal Input LOW Voltage			-0.5		0.8
V_{OH}	Output Voltage High	I_{OUT} = 4 mA	2.4			V
V_{OL}	Output Voltage Low	I_{OUT} = –4 mA			0.4	V
I_{OH}	Output Current High				4	mA
I_{OL}	Output Current Low				4	mA
C_{IN}	Input Pin Capacitance	All but D+/D–			10	pF
		D+/D–			15	pF
I_{SUSP}	Suspend Current	Connected:		0.5	1.2	mA
	CY7C68300B/CY7C68320	Disconnected:		0.3	1.0	mA
	Suspend Current	Connected:		300	380	µA
	CY7C68301B/CY7C68321	Disconnected:		100	150	µA
I_{CC}	Supply Current	USB High Speed:		50	85	mA
		USB Full Speed:		35	65	mA
$I_{UNCONFIG}$	Unconfigured Current	Current before device is granted full current requested in bMaxPower		43		mA
T_{RESET}	Reset Time After Valid Power	V_{CC} > 3.0V	5.0			ms
	Pin Reset After Power-Up		200			µs

12.0 AC Electrical Characteristics

12.1 USB Transceiver

Complies with the USB 2.0 specification.

12.2 ATA Timing

The ATA interface supports ATA PIO modes 0, 3, and 4, Ultra DMA modes 2, 3, and 4, and multiword DMA mode 2 per the ATA/ATAPI 6 Specification. The AT2LP will select the highest common transfer rate.

13.0 Ordering Information

Part Number	Package Type	GPIO Pins
CY7C68300B-56PVXC	56 SSOP Lead-free for self- and bus-powered designs	–
CY7C68301B-56PVXC	56 SSOP Lead-free for battery-powered designs	–
CY7C68300B-56LFXC	56 QFN Lead-free for self- and bus-powered designs	–
CY7C68301B-56LFXC	56 QFN Lead-free for battery-powered designs	–
CY7C68320-56LFXC	56 QFN Lead-free for self- and bus-powered designs	3[4]
CY7C68321-56LFXC	56 QFN Lead-free for battery-powered designs	3[4]
CY7C68320-100AXC	100 TQFP Lead-free for self- and bus-powered designs	6
CY7C68321-100AXC	100 TQFP Lead-free for battery-powered designs	6
CY4615B	EZ-USB AT2LP Reference Design Kit	n/a

Note:
4. The General Purpose inputs can be enabled on ATAPUEN, PWR500#, and DRVPWRVLD via EEPROM byte 8, bit 7 on CY7C68320/CY7C68321.

14.0 Package Diagrams

100-Pin Thin Plastic Quad Flatpack (14 x 20 x 1.4 mm) A101

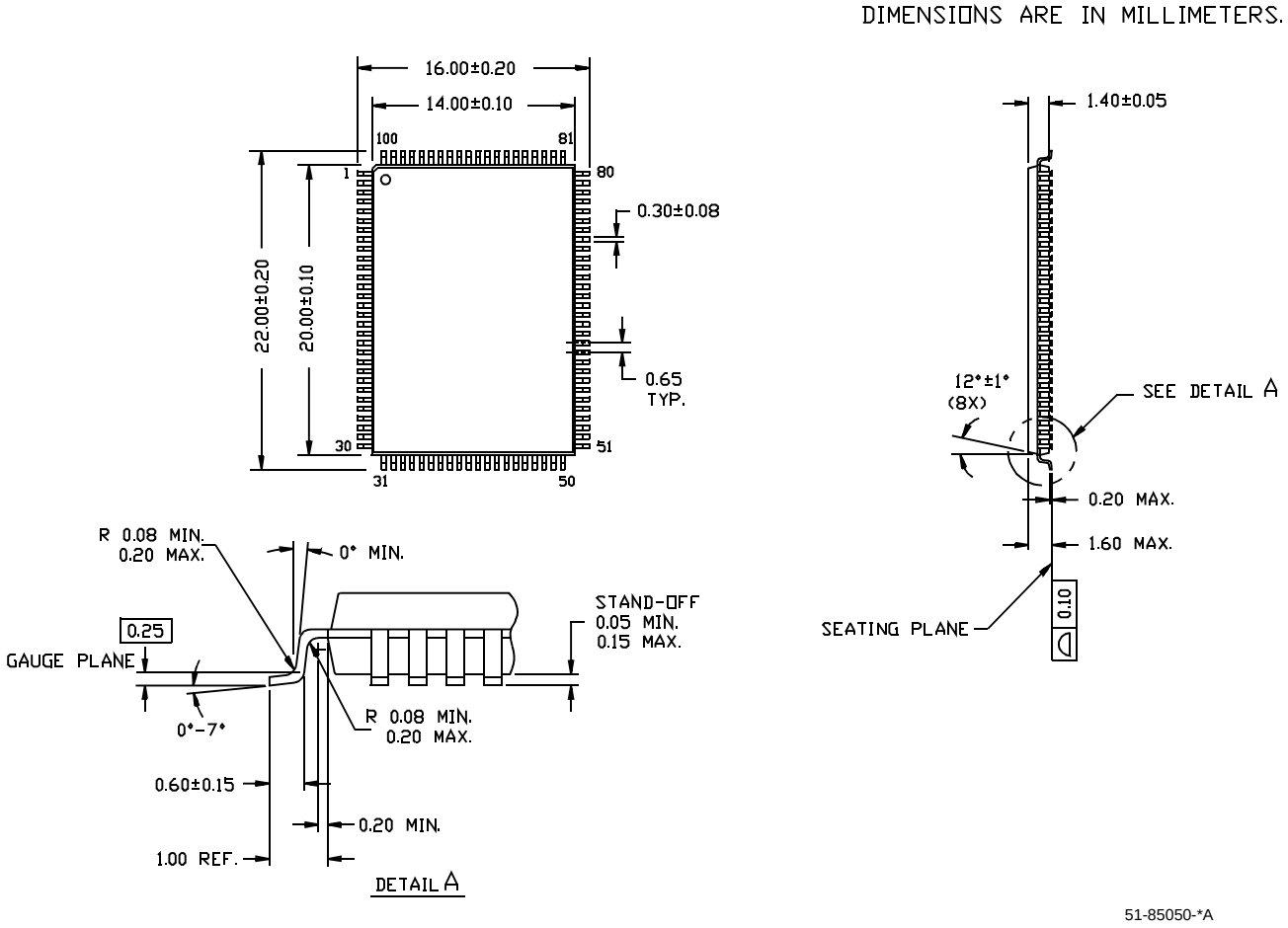

Figure 14-1. 100-lead Thin Plastic Quad Flatpack (14 x 20 x 1.4 mm)

14.0 Package Diagrams (continued)

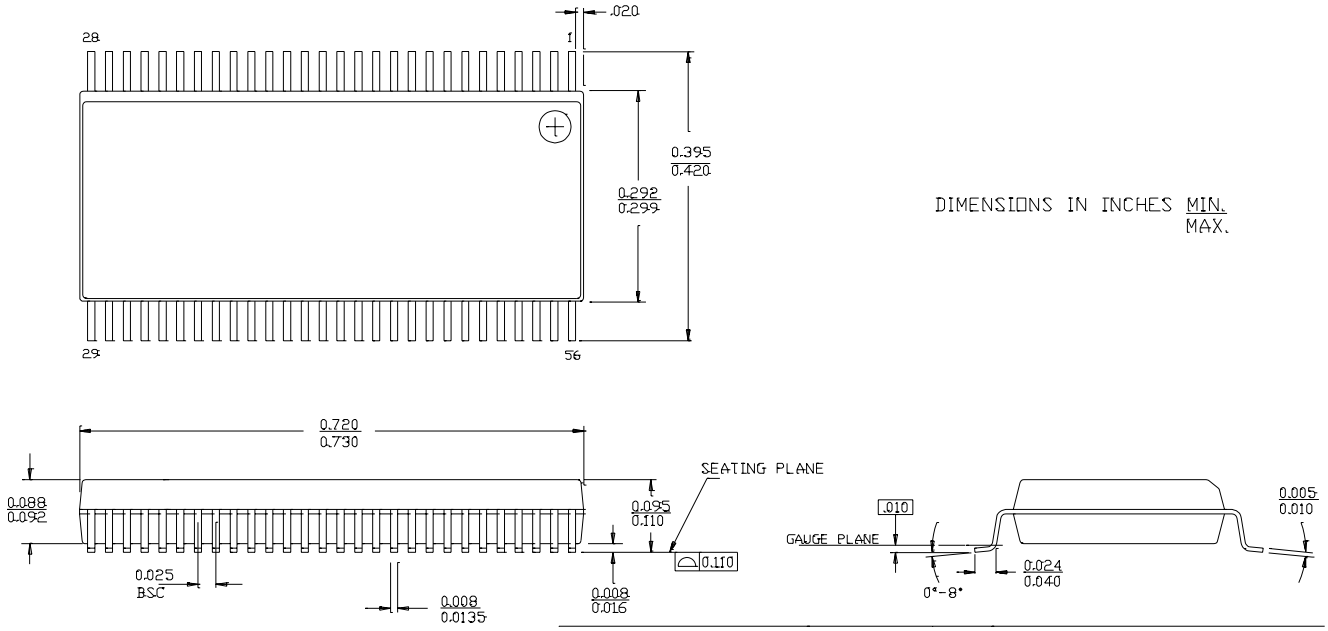

Figure 14-2. 56-lead Shrunk Small Outline Package 056

51-85062-*C

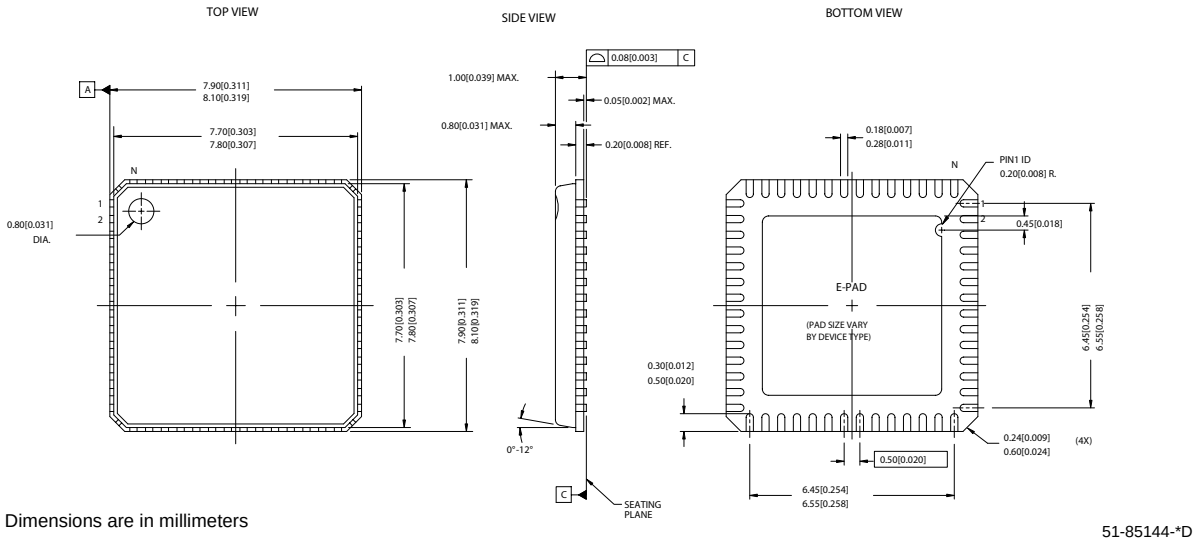

Dimensions are in millimeters

51-85144-*D

Figure 14-3. 56-Lead QFN 8 x 8 mm LF56A

15.0 PCB Layout Recommendations

The following recommendations should be followed to ensure reliable high-performance operation.

- At least a four-layer impedance controlled board is required to maintain signal quality.
- Specify impedance targets (ask your board vendor what they can achieve).
- To control impedance, maintain uniform trace widths and trace spacing.
- To minimize reflected signals, minimize the number of stubs.
- Connections between the USB connector shell and signal ground must be done near the USB connector.
- Use bypass/flyback capacitors on VBus near the connector.
- DPLUS and DMINUS trace lengths should be kept to within 2 mm of each other in length, with preferred length of 20 – 30 mm.
- Maintain a solid ground plane under the DPLUS and DMINUS traces. Do not allow the plane to be split under these traces.
- For a more stable design, do not place vias on the DPLUS or DMINUS trace routing.
- Isolate the DPLUS and DMINUS traces from all other signal traces by no less than 10 mm.
- Source for recommendations:
- EZ-USB FX2 PCB Design Recommendations, http:///www.cypress.com/cfuploads/support/app_notes/FX2_PCB.pdf.
- High-speed USB Platform Design Guidelines, http://www.usb.org/developers/data/hs_usb_pdg_r1_0.pdf.

16.0 Quad Flat Package No Leads (QFN) Package Design Notes

Electrical contact of the part to the Printed Circuit Board (PCB) is made by soldering the leads on the bottom surface of the package to the PCB. Hence, special attention is required to the heat transfer area below the package to provide a good thermal bond to the circuit board. A Copper (Cu) fill is to be designed into the PCB as a thermal pad under the package. Heat is transferred from the AT2LP through the device's metal paddle on the bottom side of the package. Heat from here is conducted to the PCB at the thermal pad. It is then conducted from the thermal pad to the PCB inner ground plane by a 5 x 5 array of vias. A via is a plated through-hole in the PCB with a finished diameter of 13 mil. The QFN's metal die paddle must be soldered to the PCB's thermal pad. Solder mask is placed on the board top side over each via to resist solder flow into the via. The mask on the top side also minimizes outgassing during the solder reflow process.

For further information on this package design please refer to the application note *Surface Mount Assembly of AMKOR's MicroLeadFrame (MLF) Technology*. The application note provides detailed information on board mounting guidelines, soldering flow, rework process, etc.

Figure 16-1 displays a cross-sectional area underneath the package. The cross section is of only one via. The solder paste template needs to be designed to allow at least 50% solder coverage. The thickness of the solder paste template should be 5 mil. It is recommended that "No Clean," type 3 solder paste is used for mounting the part. Nitrogen purge is recommended during reflow.

Figure 16-2 is a plot of the solder mask pattern and *Figure 16-3* displays an X-Ray image of the assembly (darker areas indicate solder.)

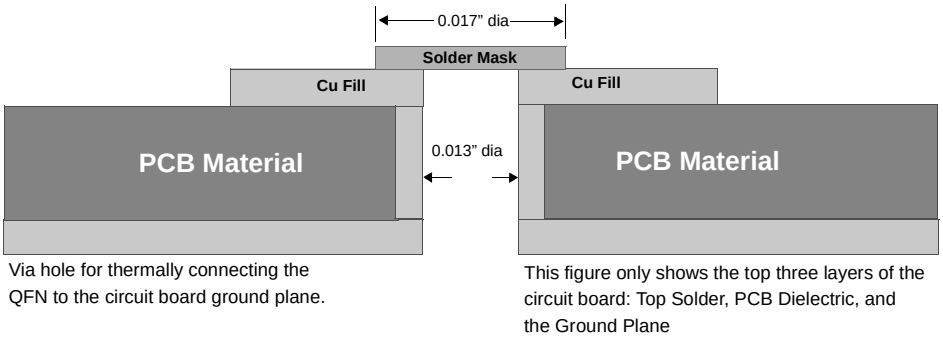

Figure 16-1. Cross-Section of the Area Under the QFN Package

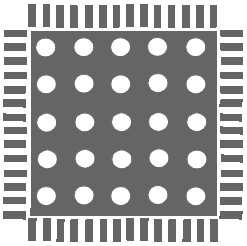

Figure 16-2. Plot of the Solder Mask (White Area)

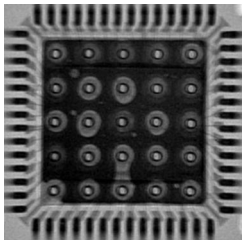

Figure 16-3. X-ray Image of the Assembly

17.0 Other Design Considerations

Certain design considerations must be followed to ensure proper operation of the CY7C68300B/CY7C68301B. The following items should be taken into account when designing a USB device with the CY7C68300B/CY7C68301B.

17.1 Proper Power-up Sequence

Power must be applied to the CY7C68300B/CY7C68301B before, or at the same time as the ATA/ATAPI device. If power is supplied to the drive first, the CY7C68300B/CY7C68301B will start up in an undefined state. Designs that utilize separate power supplies for the CY7C68300B/CY7C68301B and the ATA/ATAPI device are not recommended.

17.2 IDE Removable Media Devices

The CY7C68300B/CY7C68301B does not fully support IDE removable media devices. Changes in media state are not reported to the operating system so users will be unable to eject/reinsert media properly. This may result in lost or corrupted data.

17.3 Devices With Small Buffers

The size of the ATA/ATAPI device's buffer can greatly affect the overall data transfer performance. Care should be taken to ensure that devices have large enough buffers to handle the flow of data to/from the drive. The exact buffer size needed depends on a number of variables, but a good rule of thumb is:

(aprox min buffer) = (data rate) * (seek time + rotation time + other)

where *other* may include things like time to switch heads, power-up a laser, etc. Devices with buffers that are too small to handle the extra data may perform considerably slower than expected.

18.0 Disclaimers, Trademarks, and Copyrights

Purchase of I^2C components from Cypress or one of its sublicensed Associated Companies conveys a license under the Philips I^2C Patent Rights to use these components in an I^2C system provided that the system conforms to the I^2C Standard Specification as defined by Philips. Microsoft and Windows are registered trademarks of Microsoft Corporation. Apple and Mac OS are registered trademarks of Apple Computer, Inc. EZ-USB AT2LP, EZ-USB AT2, EZ-USB FX2 and EZ-USB TX2 are trademarks, and EZ-USB is a registered trademark of Cypress Semiconductor Corporation. All product and company names mentioned in this document are the trademarks of their respective holders.

© Cypress Semiconductor Corporation, 2005. The information contained herein is subject to change without notice. Cypress Semiconductor Corporation assumes no responsibility for the use of any circuitry other than circuitry embodied in a Cypress product. Nor does it convey or imply any license under patent or other rights. Cypress products are not warranted nor intended to be used for medical, life support, life saving, critical control or safety applications, unless pursuant to an express written agreement with Cypress. Furthermore, Cypress does not authorize its products for use as critical components in life-support systems where a malfunction or failure may reasonably be expected to result in significant injury to the user. The inclusion of Cypress

Document History Page

Description Title: CY7C68300B/CY7C68301B/CY7C68320/CY7C68321 EZ-USB AT2LP™ USB 2.0 to ATA/ATAPI Bridge Document Number: 38-08033				
REV.	**ECN NO.**	**Issue Date**	**Orig. of Change**	**Description of Change**
**	129739	12/04/03	GIR	New data sheet
*A	215125	SEE ECN	KKU	Added HID descriptor, Content Security Methods descriptor, alternate functions on 3 pins, and alternate EEPROM addressing
*B	274109	SEE ECN	ARI	Incorporated CY7C68320 information. Updated graphics to reflect this change
*C	318133	SEE ECN	GIR	Incorporated CY7C68301B and CY7C68321 information. Updated graphics to reflect this change. Revised data for final release and posting to website.
*D	323408	SEE ECN	GIR	Swapped the part numbers in the DC Characteristics table to match their correct I_{SUSP} values.