CY7C64713

EZ-USB FX1™ USB Microcontroller Full Speed USB Peripheral Controller

Features

- Single Chip Integrated USB Transceiver, SIE, and Enhanced 8051 Microprocessor
- Fit, Form, and Function Upgradable to the FX2LP (CY7C68013A)
  - Pin compatible
  - Object code compatible
  - Functionally compatible (FX1 functionality is a Subset of the FX2LP)
- Draws No More than 65 mA in Any Mode, Making the FX1 Suitable for Bus Powered Applications
- Software: 8051 Runs from Internal RAM, which is:
  - Downloaded using USB
  - Loaded from EEPROM
  - External memory device (128 pin configuration only)
- 16 KBytes of On-Chip Code/Data RAM
- Four Programmable BULK/INTERRUPT/ISOCHRONOUS Endpoints
  - Buffering options: double, triple, and quad
- Additional Programmable (BULK/INTERRUPT) 64-byte Endpoint
- 8- or 16-bit External Data Interface
- Smart Media Standard ECC Generation
- GPIF
  - Allows direct connection to most parallel interfaces; 8- and 16-bit
  - Programmable waveform descriptors and configuration registers to define waveforms
  - Supports multiple Ready (RDY) inputs and Control (CTL) outputs
- Integrated, Industry Standard 8051 with Enhanced Features:
  - Up to 48 MHz clock rate
  - Four clocks for each instruction cycle
  - Two USARTS
  - Three counters or timers
  - Expanded interrupt system
  - Two data pointers
- 3.3V Operation with 5V Tolerant Inputs
- Smart SIE
- Vectored USB Interrupts
- Separate Data Buffers for the Setup and DATA Portions of a CONTROL Transfer
- Integrated I^2C Controller, Running at 100 or 400 KHz
- 48 MHz, 24 MHz, or 12 MHz 8051 Operation
- Four Integrated FIFOs
  - Brings glue and FIFOs inside for lower system cost
  - Automatic conversion to and from 16-bit buses
  - Master or slave operation
  - FIFOs can use externally supplied clock or asynchronous strobes
  - Easy interface to ASIC and DSP ICs
- Vectored for FIFO and GPIF Interrupts
- Up to 40 General Purpose IOs (GPIO)
- Four Package Options:
  - 128 pin TQFP
  - 100 pin TQFP
  - 56 pin SSOP
  - 56 pin QFN Pb-free

Logic Block Diagram

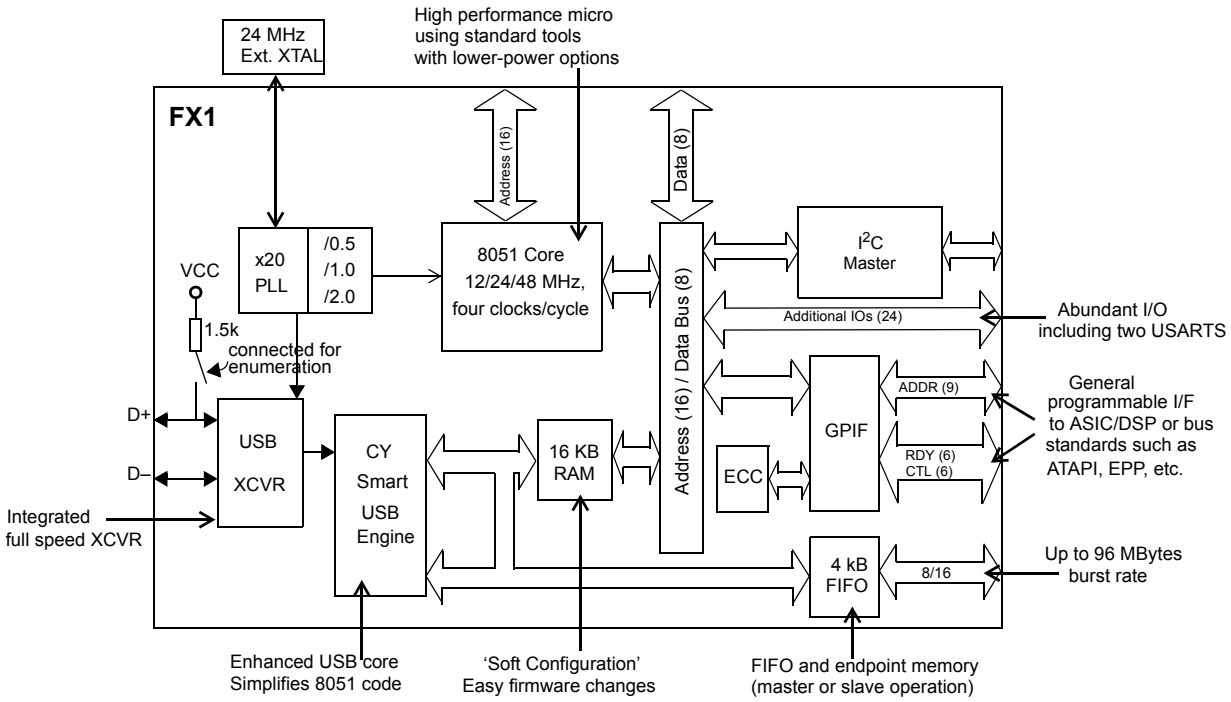

Functional Description

EZ-USB FX1™ (CY7C64713) is a full speed, highly integrated, USB microcontroller. By integrating the USB transceiver, Serial Interface Engine (SIE), enhanced 8051 microcontroller, and a programmable peripheral interface in a single chip, Cypress has created a very cost effective solution that provides superior time-to-market advantages.

The EZ-USB FX1 is more economical, because it incorporates the USB transceiver and provides a smaller footprint solution than the USB SIE or external transceiver implementations. With EZ-USB FX1, the Cypress Smart SIE handles most of the USB protocol in hardware, freeing the embedded microcontroller for application specific functions and decreasing the development time to ensure USB compatibility.

The General Programmable Interface (GPIF) and Master/Slave Endpoint FIFO (8 or 16-bit data bus) provide an easy and glueless interface to popular interfaces such as ATA, UTOPIA, EPP, PCMCIA, and most DSP/processors.

Four Pb-free packages are defined for the family: 56 SSOP, 56 QFN, 100 TQFP, and 128 TQFP.

Applications

- DSL modems
- ATA interface
- Memory card readers
- Legacy conversion devices
- Home PNA
- Wireless LAN
- MP3 players
- Networking

The Reference Designs section of the cypress website provides additional tools for typical USB applications. Each reference design comes complete with firmware source and object code, schematics, and documentation. Please visit http://www.cypress.com for more information.

Functional Overview

USB Signaling Speed

FX1 operates at one of the three rates defined in the USB Specification Revision 2.0, dated April 27, 2000:

Full speed, with a signaling bit rate of 12 Mbps.

FX1 does not support the low speed signaling mode of 1.5 Mbps or the high speed mode of 480 Mbps.

8051 Microprocessor

The 8051 microprocessor embedded in the FX1 family has 256 bytes of register RAM, an expanded interrupt system, three timer/counters, and two USARTs.

8051 Clock Frequency

FX1 has an on-chip oscillator circuit that uses an external 24 MHz (±100 ppm) crystal with the following characteristics:

- Parallel resonant
- Fundamental mode
- 500 µW drive level
- 12 pF (5% tolerance) load capacitors.

An on-chip PLL multiplies the 24 MHz oscillator up to 480 MHz, as required by the transceiver/PHY, and the internal counters divide it down for use as the 8051 clock. The default 8051 clock frequency is 12 MHz. The clock frequency of the 8051 is dynamically changed by the 8051 through the CPUCS register.

The CLKOUT pin, which is three-stated and inverted using the internal control bits, outputs the 50% duty cycle 8051 clock at the selected 8051 clock frequency which is 48, 24, or 12 MHz.

USARTS

FX1 contains two standard 8051 USARTs, addressed by Special Function Register (SFR) bits. The USART interface pins are available on separate I/O pins, and are not multiplexed with port pins.

UART0 and UART1 can operate using an internal clock at 230 KBaud with no more than 1% baud rate error. 230 KBaud operation is achieved by an internally derived clock source that generates overflow pulses at the appropriate time. The internal clock adjusts for the 8051 clock rate (48, 24, 12 MHz) such that it always presents the correct frequency for 230-KBaud operation.[1]

Special Function Registers

Certain 8051 SFR addresses are populated to provide fast access to critical FX1 functions. These SFR additions are shown in Table 1 on page 4. Bold type indicates non-standard, enhanced 8051 registers. The two SFR rows that end with ‘0’ and ‘8’ contain bit addressable registers. The four I/O ports A–D use the SFR addresses used in the standard 8051 for ports 0–3, which are not implemented in the FX1. Because of the faster and more efficient SFR addressing, the FX1 I/O ports are not addressable in the external RAM space (using the MOVX instruction).

Figure 1. Crystal Configuration

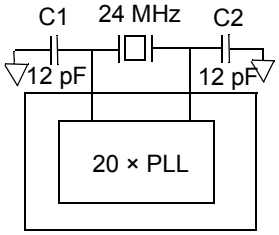

12-pF capacitor values assumes a trace capacitance of 3 pF per side on a four layer FR4 PCA

Note
1. 115-KBaud operation is also possible by programming the 8051 SMOD0 or SMOD1 bits to a ‘1’ for UART0 and UART1, respectively.

Table 1. Special Function Registers

x	8x	9x	Ax	Bx	Cx	Dx	Ex	Fx
0	**IOA**	**IOB**	**IOC**	**IOD**	SCON1	PSW	ACC	B
1	SP	**EXIF**	**INT2CLR**	**IOE**	SBUF1			
2	DPL0	**MPAGE**	**INT4CLR**	**OEA**				
3	DPH0			**OEB**				
4	**DPL1**			**OEC**				
5	**DPH1**			**OED**				
6	**DPS**			**OEE**				
7	PCON							
8	TCON	SCON0	IE	IP	T2CON	**EICON**	**EIE**	**EIP**
9	TMOD	SBUF0						
A	TL0	**AUTOPTRH1**	**EP2468STAT**	**EP01STAT**	RCAP2L			
B	TL1	**AUTOPTRL1**	**EP24FIFOFLGS**	**GPIFTRIG**	RCAP2H			
C	TH0	**reserved**	**EP68FIFOFLGS**		TL2			
D	TH1	**AUTOPTRH2**		**GPIFSGLDATH**	TH2			
E	**CKCON**	**AUTOPTRL2**		**GPIFSGLDATLX**				
F		**reserved**	**AUTOPTRSETUP**	**GPIFSGLDATLNOX**				

I²C Bus

FX1 supports the I²C bus as a master only at 100/400 KHz. SCL and SDA pins have open drain outputs and hysteresis inputs. These signals must be pulled up to 3.3V, even if no I²C device is connected.

Buses

All packages: 8 or 16-bit 'FIFO' bidirectional data bus, multiplexed on I/O ports B and D. 128 pin package: adds 16-bit output only 8051 address bus, 8-bit bidirectional data bus.

USB Boot Methods

During the power up sequence, internal logic checks the I²C port for the connection of an EEPROM whose first byte is either 0xC0 or 0xC2. If found, it uses the VID/PID/DID values in the EEPROM in place of the internally stored values (0xC0). Alternatively, it boot-loads the EEPROM contents into an internal RAM (0xC2). If no EEPROM is detected, FX1 enumerates using internally stored descriptors. The default ID values for FX1 are VID/PID/DID (0x04B4, 0x6473, 0xAxxx where xxx=Chip revision).[2]

Table 2. Default ID Values for FX1

Default VID/PID/DID		
Vendor ID	0x04B4	Cypress Semiconductor
Product ID	0x6473	EZ-USB FX1
Device release	0xAnnn	Depends on chip revision (nnn = chip revision where first silicon = 001)

ReNumeration™

Because the FX1's configuration is soft, one chip can take on the identities of multiple distinct USB devices.

When first plugged into the USB, the FX1 enumerates automatically and downloads firmware and the USB descriptor tables over the USB cable. Next, the FX1 enumerates again, this time as a device defined by the downloaded information. This patented two step process, called ReNumeration, happens instantly when the device is plugged in, with no indication that the initial download step has occurred.

Two control bits in the USBCS (USB Control and Status) register control the ReNumeration process: DISCON and RENUM. To simulate a USB disconnect, the firmware sets DISCON to 1. To reconnect, the firmware clears DISCON to 0.

Before reconnecting, the firmware sets or clears the RENUM bit to indicate if the firmware or the Default USB Device handles device requests over endpoint zero:

- RENUM = 0, the Default USB Device handles device requests
- RENUM = 1, the firmware handles device requests

Bus-powered Applications

The FX1 fully supports bus powered designs by enumerating with less than 100 mA as required by the USB specification.

Interrupt System

INT2 Interrupt Request and Enable Registers

FX1 implements an autovector feature for INT2 and INT4. There are 27 INT2 (USB) vectors, and 14 INT4 (FIFO/GPIF) vectors. See EZ-USB Technical Reference Manual (TRM) for more details.

Note
2. The I²C bus SCL and SDA pins must be pulled up, even if an EEPROM is not connected. Otherwise this detection method does not work properly.

[+] Feedback

USB-Interrupt Autovectors

The main USB interrupt is shared by 27 interrupt sources. The FX1 provides a second level of interrupt vectoring, called Autovectoring, to save code and processing time that is normally required to identify the individual USB interrupt source. When a USB interrupt is asserted, the FX1 pushes the program counter on to its stack and then jumps to address 0x0043, where it expects to find a “jump” instruction to the USB Interrupt service routine.

The FX1 jump instruction is encoded as shown in Table 3.

If Autovectoring is enabled (AV2EN = 1 in the INTSETUP register), the FX1 substitutes its INT2VEC byte. Therefore, if the high byte (“page”) of a jump table address is preloaded at location 0x0044, the automatically inserted INT2VEC byte at 0x0045 directs the jump to the correct address out of the 27 addresses within the page.

FIFO/GPIF Interrupt (INT4)

Just as the USB Interrupt is shared among 27 individual USB-interrupt sources, the FIFO/GPIF interrupt is shared among 14 individual FIFO/GPIF sources. The FIFO/GPIF Interrupt, such as the USB Interrupt, can employ autovectoring. Table 4 on page 6 shows the priority and INT4VEC values for the 14 FIFO/GPIF interrupt sources.

Table 3. INT2 USB Interrupts

USB INTERRUPT TABLE FOR INT2			
Priority	**INT2VEC Value**	**Source**	**Notes**
1	00	SUDAV	Setup Data Available
2	04	SOF	Start of Frame
3	08	SUTOK	Setup Token Received
4	0C	SUSPEND	USB Suspend request
5	10	USB RESET	Bus reset
6	14		Reserved
7	18	EP0ACK	FX1 ACK’d the CONTROL Handshake
8	1C		Reserved
9	20	EP0-IN	EP0-IN ready to be loaded with data
10	24	EP0-OUT	EP0-OUT has USB data
11	28	EP1-IN	EP1-IN ready to be loaded with data
12	2C	EP1-OUT	EP1-OUT has USB data
13	30	EP2	IN: buffer available. OUT: buffer has data
14	34	EP4	IN: buffer available. OUT: buffer has data
15	38	EP6	IN: buffer available. OUT: buffer has data
16	3C	EP8	IN: buffer available. OUT: buffer has data
17	40	IBN	IN-Bulk-NAK (any IN endpoint)
18	44		Reserved
19	48	EP0PING	EP0 OUT was Pinged and it NAK’d
20	4C	EP1PING	EP1 OUT was Pinged and it NAK’d
21	50	EP2PING	EP2 OUT was Pinged and it NAK’d
22	54	EP4PING	EP4 OUT was Pinged and it NAK’d
23	58	EP6PING	EP6 OUT was Pinged and it NAK’d
24	5C	EP8PING	EP8 OUT was Pinged and it NAK’d
25	60	ERRLIMIT	Bus errors exceeded the programmed limit
26	64		
27	68		Reserved
28	6C		Reserved
29	70	EP2ISOERR	ISO EP2 OUT PID sequence error
30	74	EP4ISOERR	ISO EP4 OUT PID sequence error
31	78	EP6ISOERR	ISO EP6 OUT PID sequence error
32	7C	EP8ISOERR	ISO EP8 OUT PID sequence error

[+] Feedback

Table 4. Individual FIFO/GPIF Interrupt Sources

Priority	INT4VEC Value	Source	Notes
1	80	EP2PF	Endpoint 2 Programmable Flag
2	84	EP4PF	Endpoint 4 Programmable Flag
3	88	EP6PF	Endpoint 6 Programmable Flag
4	8C	EP8PF	Endpoint 8 Programmable Flag
5	90	EP2EF	Endpoint 2 Empty Flag
6	94	EP4EF	Endpoint 4 Empty Flag
7	98	EP6EF	Endpoint 6 Empty Flag
8	9C	EP8EF	Endpoint 8 Empty Flag
9	A0	EP2FF	Endpoint 2 Full Flag
10	A4	EP4FF	Endpoint 4 Full Flag
11	A8	EP6FF	Endpoint 6 Full Flag
12	AC	EP8FF	Endpoint 8 Full Flag
13	B0	GPIFDONE	GPIF Operation Complete
14	B4	GPIFWF	GPIF Waveform

If Autovectoring is enabled (AV4EN = 1 in the INTSETUP register), the FX1 substitutes its INT4VEC byte. Therefore, if the high byte (“page”) of a jump-table address is preloaded at location 0x0054, the automatically inserted INT4VEC byte at 0x0055 directs the jump to the correct address out of the 14 addresses within the page. When the ISR occurs, the FX1 pushes the program counter onto its stack and then jumps to address 0x0053, where it expects to find a “jump” instruction to the ISR Interrupt service routine.

Reset and Wakeup

Reset Pin

The input pin, RESET#, resets the FX1 when asserted. This pin has hysteresis and is active LOW. When a crystal is used with the CY7C64713, the reset period must allow for the stabilization of the crystal and the PLL. This reset period must be approximately 5 ms after VCC has reached 3.0 Volts. If the crystal input pin is driven by a clock signal the internal PLL stabilizes in 200 µs after VCC has reached 3.0V[3]. Figure 2 shows a power on reset condition and a reset applied during operation. A power on reset is defined as the time a reset is asserted when power is being applied to the circuit. A powered reset is defined to be when the FX1 has been previously powered on and operating and the RESET# pin is asserted.

Cypress provides an application note which describes and recommends power on reset implementation and is found on the Cypress web site. While the application note discusses the FX2, the information provided applies also to the FX1. For more information on reset implementation for the FX2 family of products visit http://www.cypress.com.

Figure 2. Reset Timing Plots

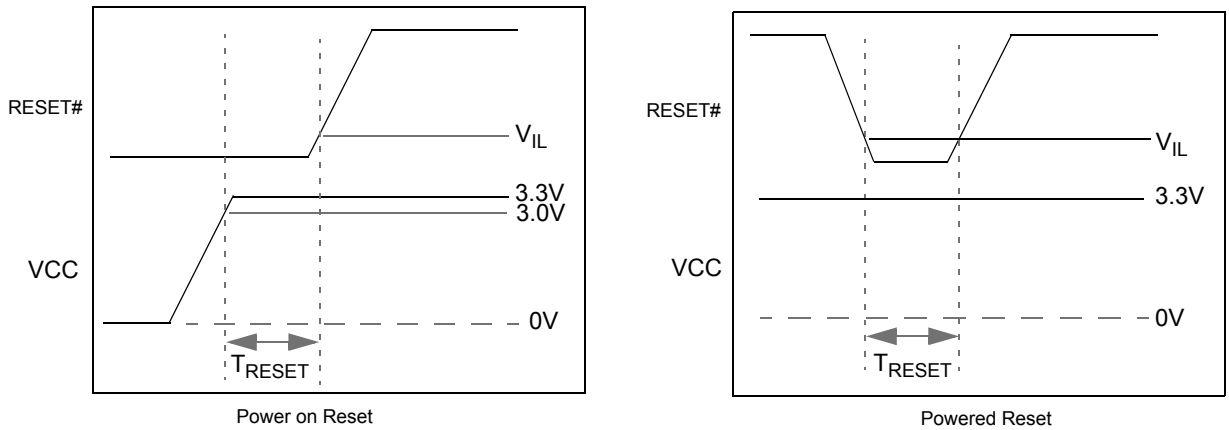

Note
3. If the external clock is powered at the same time as the CY7C64713 and has a stabilization wait period. It must be added to the 200 µs.

[+] Feedback

Table 5. Reset Timing Values

Condition	T_{RESET}
Power On Reset with crystal	5 ms
Power On Reset with external clock	200 µs + Clock stability time
Powered Reset	200 µs

Wakeup Pins

The 8051 puts itself and the rest of the chip into a power down mode by setting PCON.0 = 1. This stops the oscillator and PLL. When WAKEUP is asserted by external logic, the oscillator restarts, after the PLL stabilizes, and then the 8051 receives a wakeup interrupt. This applies irrespective of whether the FX1 is connected to the USB or not.

The FX1 exits the power down (USB suspend) state using one of the following methods:

- USB bus activity (if D+/D– lines are left floating, noise on these lines may indicate activity to the FX1 and initiate a wakeup).
- External logic asserts the WAKEUP pin.
- External logic asserts the PA3/WU2 pin.

The second wakeup pin, WU2, can also be configured as a general purpose I/O pin. This allows a simple external R-C network to be used as a periodic wakeup source. Note that WAKEUP is by default active LOW.

Program/Data RAM

Size

The FX1 has 16 KBytes of internal program/data RAM, where PSEN#/RD# signals are internally ORed to allow the 8051 to access it as both program and data memory. No USB control registers appear in this space.

Two memory maps are shown in the following diagrams:

- Figure 3 Internal Code Memory, EA = 0
- Figure 4 External Code Memory, EA = 1.

Internal Code Memory, EA = 0

This mode implements the internal 16 KByte block of RAM (starting at 0) as combined code and data memory. When the external RAM or ROM is added, the external read and write strobes are suppressed for memory spaces that exist inside the chip. This allows the user to connect a 64 KByte memory without requiring the address decodes to keep clear of internal memory spaces.

Only the **internal** 16 KBytes and **scratch pad** 0.5 KBytes RAM spaces have the following access:

- USB download
- USB upload
- Setup data pointer
- I^2C interface boot load

Figure 3. Internal Code Memory, EA = 0.

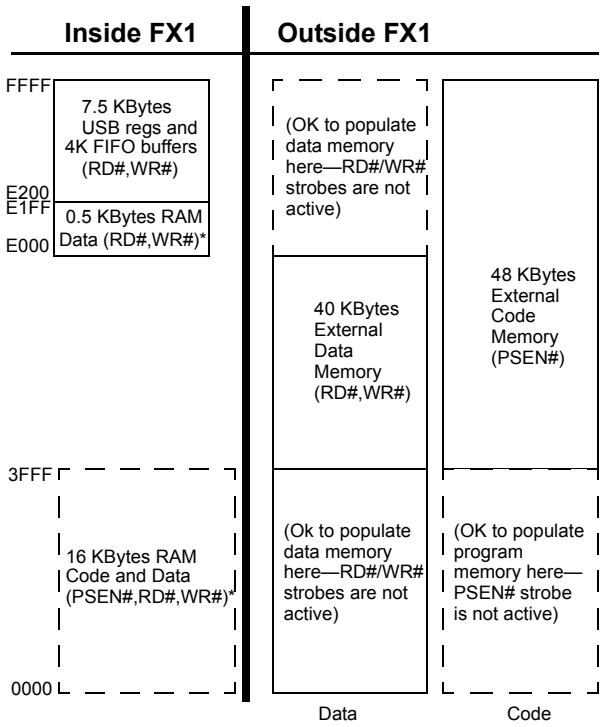

*SUDPTR, USB upload/download, I^2C interface boot access

[+] Feedback

External Code Memory, EA = 1

The bottom 16 KBytes of program memory is external, and therefore the bottom 16 KBytes of internal RAM is accessible only as data memory.

Figure 4. External Code Memory, EA = 1

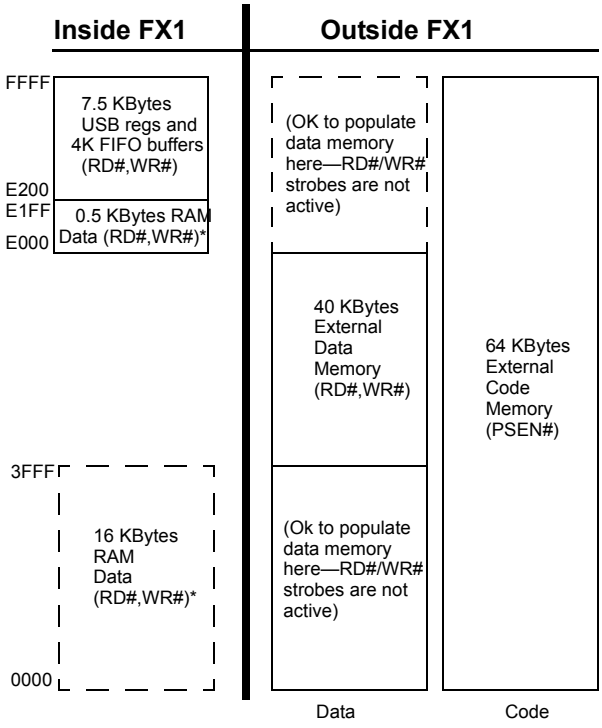

*SUDPTR, USB upload/download, I^2C interface boot access

Figure 5. Register Addresses

FFFF F000	4 KBytes EP2-EP8 buffers (8 x 512) Not all Space is available for all transfer types
EFFF E800	2 KBytes RESERVED
E7FF E7C0	64 Bytes EP1IN
E7BF E780	64 Bytes EP1OUT
E77F E740	64 Bytes EP0 IN/OUT
E73F E700	64 Bytes RESERVED
E6FF E500	8051 Addressable Registers (512)
E4FF E480	Reserved (128)
E47F E400	128 bytes GPIF Waveforms
E3FF E200	Reserved (512)
E1FF E000	512 bytes 8051 xdata RAM

Endpoint RAM

Size

- 3 × 64 bytes (Endpoints 0 and 1)
- 8 × 512 bytes (Endpoints 2, 4, 6, 8)

Organization

- EP0—Bidirectional endpoint zero, 64 byte buffer
- EP1IN, EP1OUT—64 byte buffers, bulk or interrupt
- EP2, 4, 6, 8—Eight 512-byte buffers, bulk, interrupt, or isochronous, of which only the transfer size is available. EP4 and EP8 are double buffered, while EP2 and 6 are either double, triple, or quad buffered. Regardless of the physical size of the buffer, each endpoint buffer accommodates only one full speed packet. For bulk endpoints, the maximum number of bytes it can accommodate is 64, even though the physical buffer size is 512 or 1024. For an ISOCHRONOUS endpoint the maximum number of bytes it can accommodate is 1023. For endpoint configuration options, see Figure 6.

Setup Data Buffer

A separate 8-byte buffer at 0xE6B8-0xE6BF holds the Setup data from a CONTROL transfer.

Default Alternate Settings

In the following table, '0' means "not implemented", and '2×' means "double buffered".

Table 6. Default Alternate Settings

Alternate Setting	0	1	2	3
ep0	64	64	64	64
ep1out	0	64 bulk	64 int	64 int
ep1in	0	64 bulk	64 int	64 int
ep2	0	64 bulk out (2×)	64 int out (2×)	64 iso out (2×)
ep4	0	64 bulk out (2×)	64 bulk out (2×)	64 bulk out (2×)
ep6	0	64 bulk in (2×)	64 int in (2×)	64 iso in (2×)
ep8	0	64 bulk in (2×)	64 bulk in (2×)	64 bulk in (2×)

External FIFO Interface

Architecture

The FX1 slave FIFO architecture has eight 512-byte blocks in the endpoint RAM that directly serve as FIFO memories, and are controlled by FIFO control signals (such as IFCLK, SLCS#, SLRD, SLWR, SLOE, PKTEND, and flags). The usable size of these buffers depend on the USB transfer mode as described in the section Organization on page 9.

In operation, some of the eight RAM blocks fill or empty from the SIE, while the others are connected to the I/O transfer logic. The transfer logic takes two forms: the GPIF for internally generated control signals or the slave FIFO interface for externally controlled transfers.

Figure 6. Endpoint Configuration

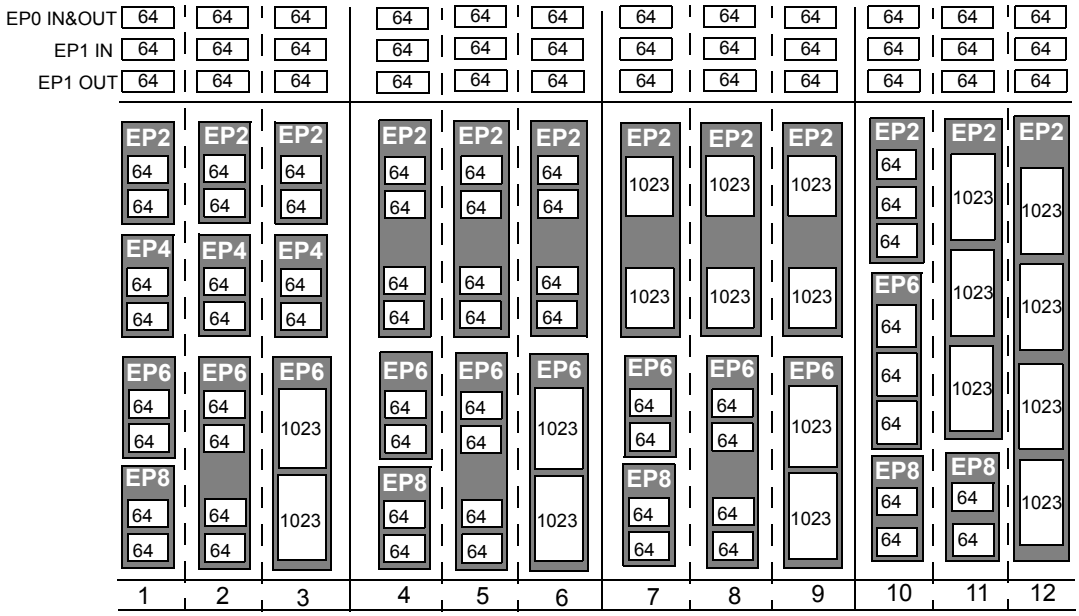

[+] Feedback

Master/Slave Control Signals

The FX1 endpoint FIFOS are implemented as eight physically distinct 256x16 RAM blocks. The 8051/SIE can switch any of the RAM blocks between two domains: the USB (SIE) domain and the 8051-I/O Unit domain. This switching is done instantaneously, giving essentially zero transfer time between “USB FIFOS” and “Slave FIFOS.” While they are physically the same memory, no bytes are actually transferred between buffers.

At any time, some RAM blocks fill or empty with USB data under SIE control, while other RAM blocks are available to the 8051 and the I/O control unit. The RAM blocks operate as a single-port in the USB domain, and dual port in the 8051-I/O domain. The blocks are configured as single, double, triple, or quad buffered.

The I/O control unit implements either an internal master (M for master) or external master (S for Slave) interface.

In Master (M) mode, the GPIF internally controls FIFOADR[1..0] to select a FIFO. The RDY pins (two in the 56 pin package, six in the 100 pin and 128 pin packages) are used as flag inputs from an external FIFO or other logic if desired. The GPIF is run from either an internally derived clock or an externally supplied clock (IFCLK), at a rate that transfers data up to 96 Megabytes/s (48 MHz IFCLK with 16-bit interface).

In Slave (S) mode, the FX1 accepts either an internally derived clock or an externally supplied clock (IFCLK with a maximum frequency of 48 MHz) and SLCS#, SLRD, SLWR, SLOE, PKTEND signals from external logic. When using an external IFCLK, the external clock must be present before switching to the external clock with the IFCLKSRC bit. Each endpoint can individually be selected for byte or word operation by an internal configuration bit, and a Slave FIFO Output Enable signal SLOE enables data of the selected width. External logic must ensure that the output enable signal is inactive when writing data to a slave FIFO. The slave interface can also operate asynchronously, where the SLRD and SLWR signals act directly as strobes, rather than a clock qualifier as in the synchronous mode. The signals SLRD, SLWR, SLOE, and PKTEND are gated by the signal SLCS#.

GPIF and FIFO Clock Rates

An 8051 register bit selects one of two frequencies for the internally supplied interface clock: 30 MHz and 48 MHz. Alternatively, an externally supplied clock of 5 to 48 MHz feeding the IFCLK pin is used as the interface clock. IFCLK is configured to function as an output clock when the GPIF and FIFOs are internally clocked. An output enable bit in the IFCONFIG register turns this clock output off, if desired. Another bit within the IFCONFIG register inverts the IFCLK signal whether internally or externally sourced.

GPIF

The GPIF is a flexible 8 or 16-bit parallel interface driven by a user programmable finite state machine. It allows the CY7C64713 to perform local bus mastering, and can implement a wide variety of protocols such as ATA interface, printer parallel port, and Utopia.

The GPIF has six programmable control outputs (CTL), nine address outputs (GPIFADRx), and six general purpose Ready inputs (RDY). The data bus width is 8 or 16 bits. Each GPIF vector defines the state of the control outputs, and determines what state a Ready input (or multiple inputs) must be before proceeding. The GPIF vector is programmed to advance a FIFO to the next data value, advance an address, and so on. A sequence of the GPIF vectors create a single waveform that executes to perform the data move between the FX1 and the external device.

Six Control OUT Signals

The 100 and 128 pin packages bring out all six Control Output pins (CTL0-CTL5). The 8051 programs the GPIF unit to define the CTL waveforms. The 56 pin package brings out three of these signals: CTL0 - CTL2. CTLx waveform edges are programmed to make transitions as fast as once per clock (20.8 ns using a 48 MHz clock).

Six Ready IN Signals

The 100 and 128 pin packages bring out all six Ready inputs (RDY0–RDY5). The 8051 programs the GPIF unit to test the RDY pins for GPIF branching. The 56 pin package brings out two of these signals, RDY0–1.

Nine GPIF Address OUT Signals

Nine GPIF address lines are available in the 100 and 128 pin packages: GPIFADR[8..0]. The GPIF address lines allow indexing through up to a 512 byte block of RAM. If more address lines are needed, I/O port pins are used.

Long Transfer Mode

In Master mode, the 8051 appropriately sets the GPIF transaction count registers (GPIFTCB3, GPIFTCB2, GPIFTCB1, or GPIFTCB0) for unattended transfers of up to 2^{32} transactions. The GPIF automatically throttles data flow to prevent under or overflow until the full number of requested transactions are complete. The GPIF decrements the value in these registers to represent the current status of the transaction.

ECC Generation

The EZ-USB FX1 can calculate ECCs (Error Correcting Codes) on data that pass across its GPIF or Slave FIFO interfaces. There are two ECC configurations: Two ECCs, each calculated over 256 bytes (SmartMedia™ Standard); and one ECC calculated over 512 bytes.

The ECC can correct any one-bit error or detect any two-bit error.

Note To use the ECC logic, the GPIF or Slave FIFO interface must be configured for byte-wide operation.

ECC Implementation

The two ECC configurations are selected by the ECCM bit:

0.0.0.1 ECCM = 0

Two 3-byte ECCs, each calculated over a 256-byte block of data. This configuration conforms to the SmartMedia Standard.

Write any value to ECCRESET, then pass data across the GPIF or Slave FIFO interface. The ECC for the first 256 bytes of data is calculated and stored in ECC1. The ECC for the next 256 bytes is stored in ECC2. After the second ECC is calculated, the values in the ECCx registers do not change until the ECCRESET is written again, even if more data is subsequently passed across the interface.

[+] Feedback

0.0.0.2 ECCM = 1

One 3-byte ECC calculated over a 512-byte block of data.

Write any value to ECCRESET, then pass data across the GPIF or Slave FIFO interface. The ECC for the first 512 bytes of data is calculated and stored in ECC1; ECC2 is not used. After the ECC is calculated, the value in ECC1 does not change until the ECCRESET is written again, even if more data is subsequently passed across the interface

USB Uploads and Downloads

The core has the ability to directly edit the data contents of the internal 16 KByte RAM and of the internal 512 byte scratch pad RAM via a vendor specific command. This capability is normally used when 'soft' downloading user code and is available only to and from the internal RAM, only when the 8051 is held in reset. The available RAM spaces are 16 KBytes from 0x0000–0x3FFF (code/data) and 512 bytes from 0xE000–0xE1FF (scratch pad data RAM).[4]

Autopointer Access

FX1 provides two identical autopointers. They are similar to the internal 8051 data pointers, but with an additional feature: they can optionally increment after every memory access. This capability is available to and from both internal and external RAM. The autopointers are available in external FX1 registers, under the control of a mode bit (AUTOPTRSETUP.0). Using the external FX1 autopointer access (at 0xE67B – 0xE67C) allows the autopointer to access all RAM, internal and external, to the part. Also, the autopointers can point to any FX1 register or endpoint buffer space. When autopointer access to external memory is enabled, the location 0xE67B and 0xE67C in XDATA and the code space cannot be used.

I²C Controller

FX1 has one I²C port that is driven by two internal controllers: one that automatically operates at boot time to load VID/PID/DID and configuration information; and another that the 8051, once running, uses to control external I²C devices. The I²C port operates in master mode only.

I²C Port Pins

The I²C pins SCL and SDA must have external 2.2 kΩ pull up resistors even if no EEPROM is connected to the FX1. External EEPROM device address pins must be configured properly. See Table 7 for configuring the device address pins.

Table 7. Strap Boot EEPROM Address Lines to These Values

Bytes	Example EEPROM	A2	A1	A0
16	24LC00[5]	N/A	N/A	N/A
128	24LC01	0	0	0
256	24LC02	0	0	0
4K	24LC32	0	0	1
8K	24LC64	0	0	1
16K	24LC128	0	0	1

I²C Interface Boot Load Access

At power on reset the I²C interface boot loader loads the VID/PID/DID configuration bytes and up to 16 KBytes of program/data. The available RAM spaces are 16 KBytes from 0x0000–0x3FFF and 512 bytes from 0xE000–0xE1FF. The 8051 is in reset. I²C interface boot loads only occur after power on reset.

I²C Interface General Purpose Access

The 8051 can control peripherals connected to the I²C bus using the I2CTL and I2DAT registers. FX1 provides I²C master control only, because it is never an I²C slave.

Compatible with Previous Generation EZ-USB FX2

The EZ-USB FX1 is fit, form, and function upgradable to the EZ-USB FX2LP. This makes for an easy transition for designers wanting to upgrade their systems from full speed to high speed designs. The pinout and package selection are identical, and all firmware developed for the FX1 function in the FX2LP with proper addition of high speed descriptors and speed switching code.

Pin Assignments

Figure 7 on page 12 identifies all signals for the three package types. The following pages illustrate the individual pin diagrams, plus a combination diagram showing which of the full set of signals are available in the 128, 100, and 56 pin packages.

The signals on the left edge of the 56 pin package in Figure 7 on page 12 are common to all versions in the FX1 family. Three modes are available in all package versions: Port, GPIF master, and Slave FIFO. These modes define the signals on the right edge of the diagram. The 8051 selects the interface mode using the IFCONFIG[1:0] register bits. Port mode is the power on default configuration.

The 100-pin package adds functionality to the 56 pin package by adding these pins:

- PORTC or alternate GPIFADR[7:0] address signals
- PORTE or alternate GPIFADR[8] address signal and seven additional 8051 signals
- Three GPIF Control signals
- Four GPIF Ready signals
- Nine 8051 signals (two USARTs, three timer inputs, INT4,and INT5#)
- BKPT, RD#, WR#.

The 128 pin package adds the 8051 address and data buses plus control signals. Note that two of the required signals, RD# and WR#, are present in the 100 pin version. In the 100 pin and 128 pin versions, an 8051 control bit is set to pulse the RD# and WR# pins when the 8051 reads from and writes to the PORTC.

Notes
4. After the data is downloaded from the host, a 'loader' executes from the internal RAM to transfer downloaded data to the external memory.
5. This EEPROM has no address pins.

[+] Feedback

Figure 7. Signals

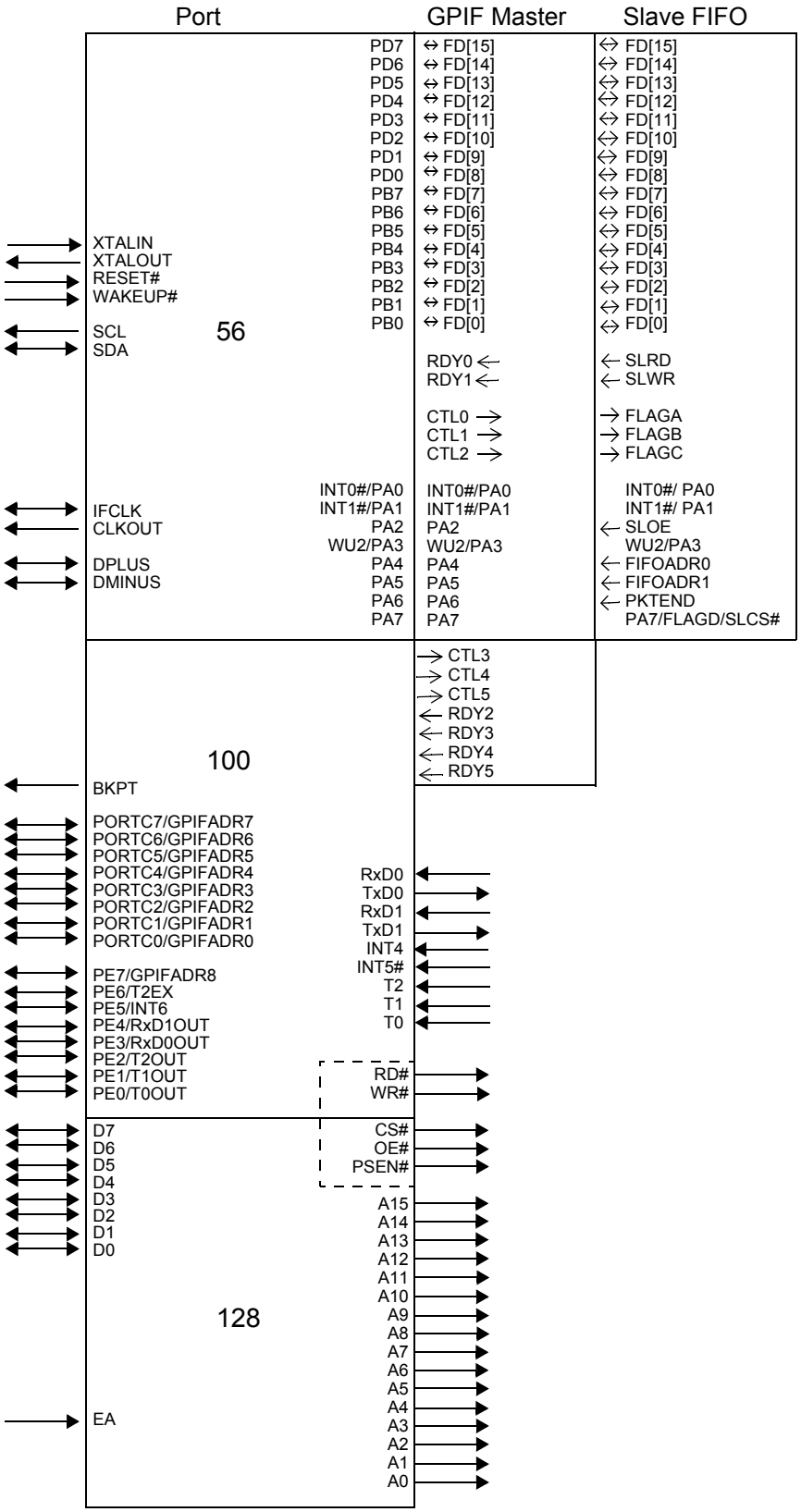

[+] Feedback

Figure 8. CY7C64713 128 pin TQFP Pin Assignment

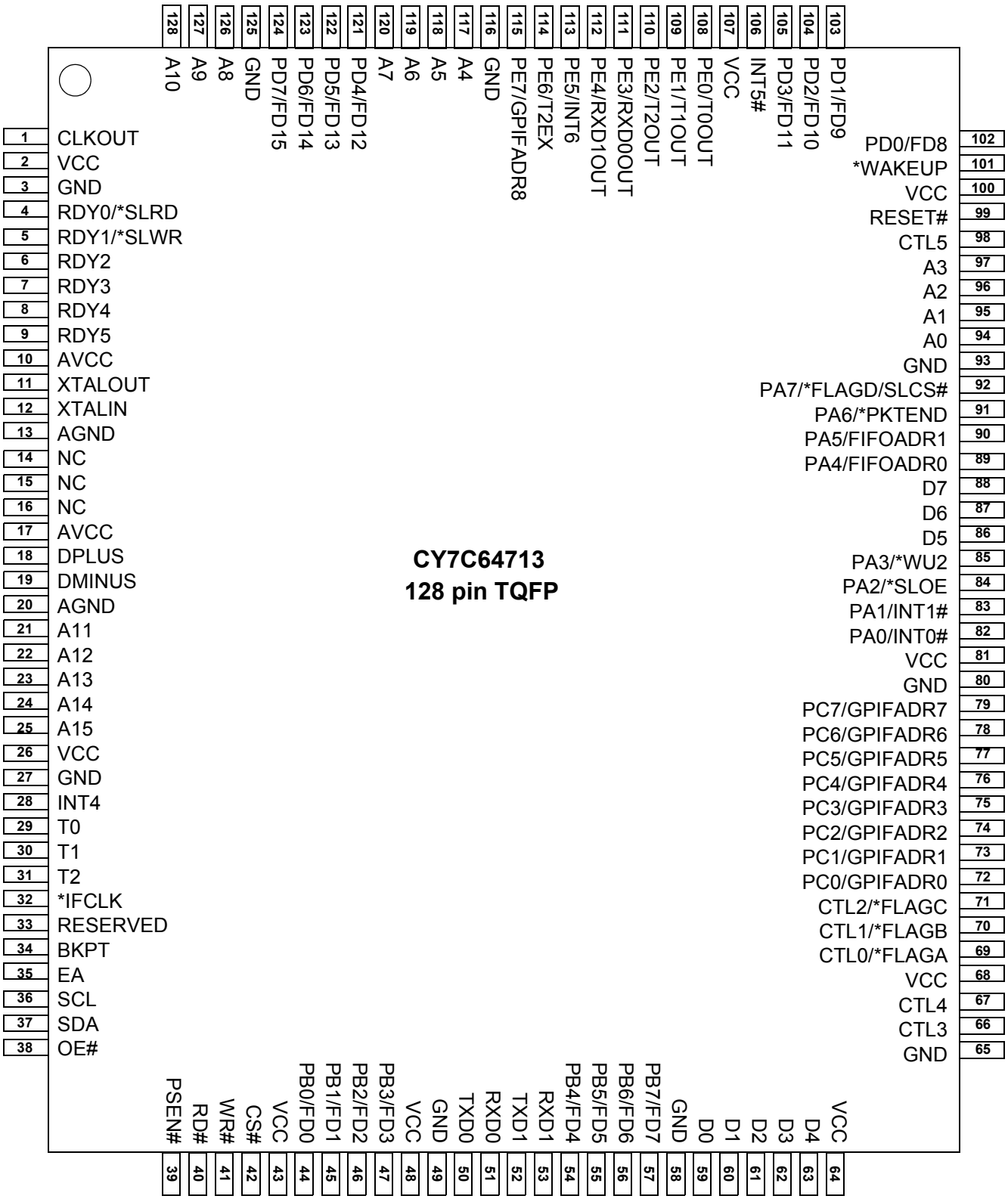

* indicates programmable polarity

[+] Feedback

Figure 9. CY7C64713 100 pin TQFP Pin Assignment

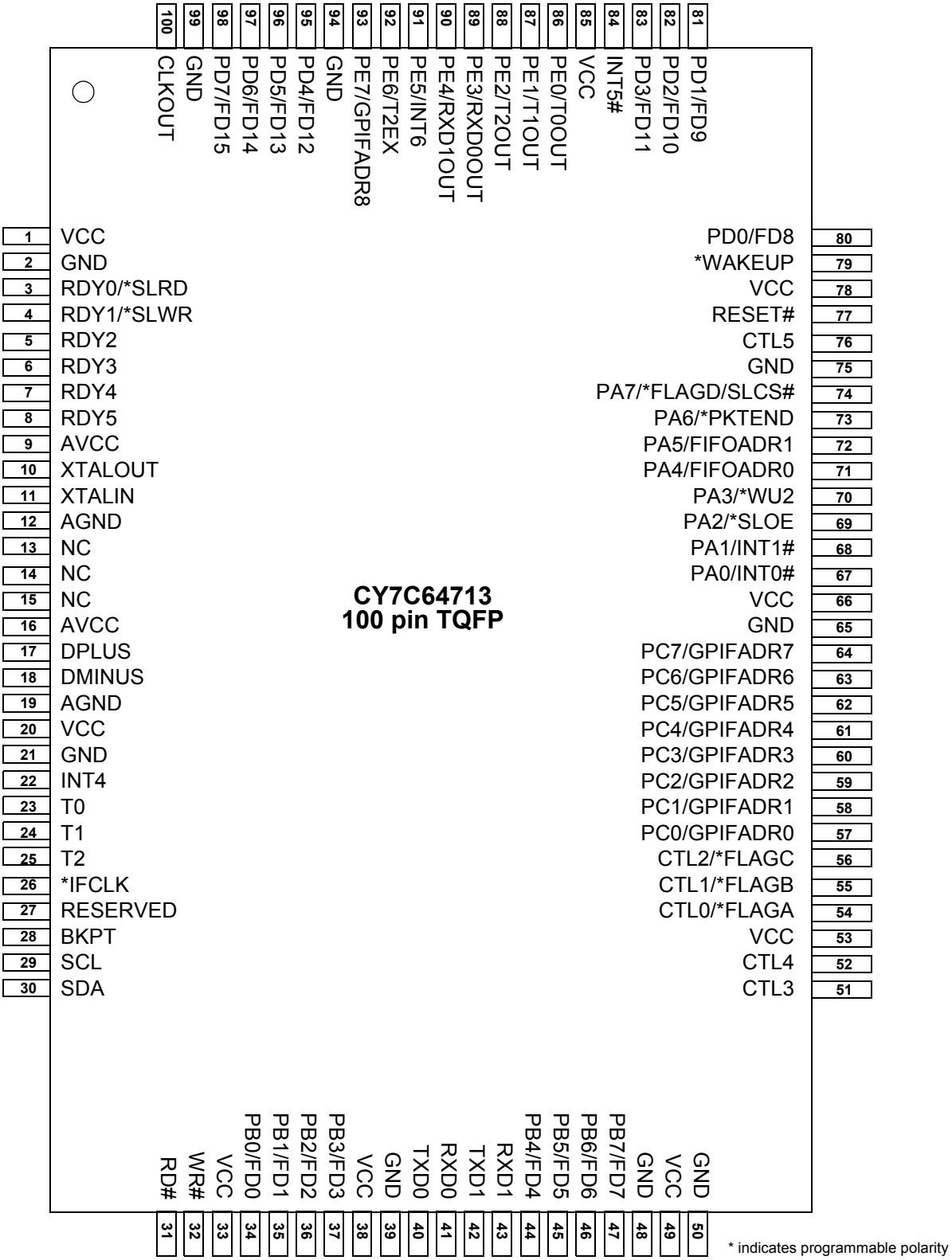

* indicates programmable polarity

[+] Feedback

Figure 10. CY7C64713 56 pin SSOP Pin Assignment

CY7C64713
56 pin SSOP

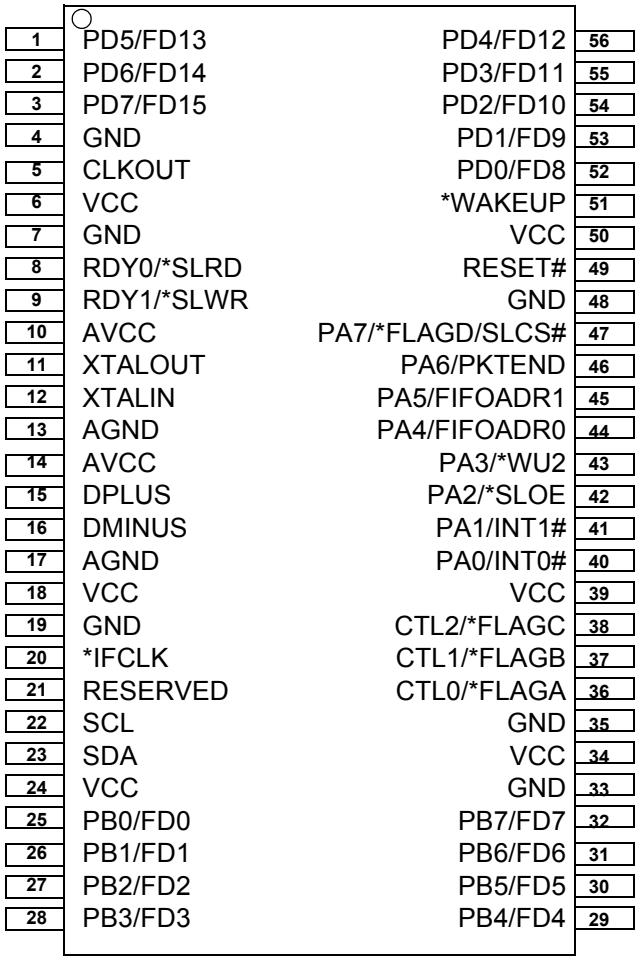

* indicates programmable polarity

Figure 11. CY7C64713 56 pin QFN Pin Assignment

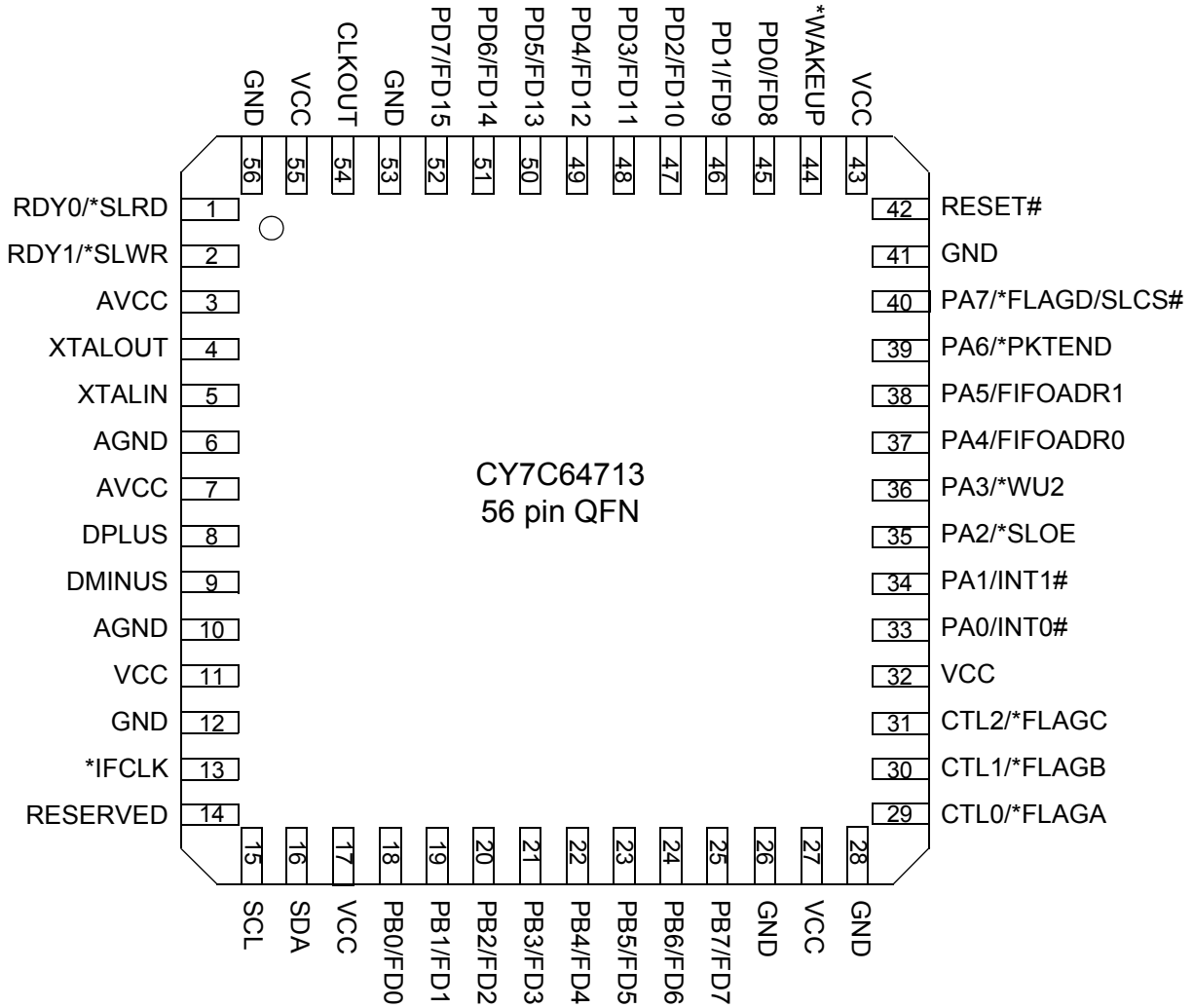

* indicates programmable polarity

CY7C64713 Pin Definitions

The FX1 Pin Definitions for CY7C64713 follow.[6]

Table 8. FX1 Pin Definitions

128 TQFP	100 TQFP	56 SSOP	56 QFN	Name	Type	Default	Description
10	9	10	3	AVCC	Power	N/A	**Analog VCC**. Connect this pin to 3.3V power source. This signal provides power to the analog section of the chip.
17	16	14	7	AVCC	Power	N/A	**Analog VCC**. Connect this pin to 3.3V power source. This signal provides power to the analog section of the chip.
13	12	13	6	AGND	Ground	N/A	**Analog Ground**. Connect to ground with as short a path as possible.
20	19	17	10	AGND	Ground	N/A	**Analog Ground**. Connect to ground with as short a path as possible.
19	18	16	9	DMINUS	I/O/Z	Z	**USB D– Signal**. Connect to the USB D– signal.
18	17	15	8	DPLUS	I/O/Z	Z	**USB D+ Signal**. Connect to the USB D+ signal.
94				A0	Output	L	**8051 Address Bus**. This bus is driven at all times. When the 8051 is addressing the internal RAM it reflects the internal address.
95				A1	Output	L	
96				A2	Output	L	
97				A3	Output	L	
117				A4	Output	L	
118				A5	Output	L	
119				A6	Output	L	
120				A7	Output	L	
126				A8	Output	L	
127				A9	Output	L	
128				A10	Output	L	
21				A11	Output	L	
22				A12	Output	L	
23				A13	Output	L	
24				A14	Output	L	
25				A15	Output	L	
59				D0	I/O/Z	Z	**8051 Data Bus**. This bidirectional bus is high impedance when inactive, input for bus reads, and output for bus writes. The data bus is used for external 8051 program and data memory. The data bus is active only for external bus accesses, and is driven LOW in suspend.
60				D1	I/O/Z	Z	
61				D2	I/O/Z	Z	
62				D3	I/O/Z	Z	
63				D4	I/O/Z	Z	
86				D5	I/O/Z	Z	
87				D6	I/O/Z	Z	
88				D7	I/O/Z	Z	
39				PSEN#	Output	H	**Program Store Enable**. This active LOW signal indicates an 8051 code fetch from external memory. It is active for program memory fetches from 0x4000–0xFFFF when the EA pin is LOW, or from 0x0000–0xFFFF when the EA pin is HIGH.
34	28			BKPT	Output	L	**Breakpoint**. This pin goes active (HIGH) when the 8051 address bus matches the BPADDRH/L registers and breakpoints are enabled in the BREAKPT register (BPEN = 1). If the BPPULSE bit in the BREAKPT register is HIGH, this signal pulses HIGH for eight 12-/24-/48 MHz clocks. If the BPPULSE bit is LOW, the signal remains HIGH until the 8051 clears the BREAK bit (by writing '1' to it) in the BREAKPT register.

Note

6. Do not leave unused inputs floating. Tie either HIGH or LOW as appropriate. Pull outputs up or down to ensure signals at power up and in standby. Note that no pins must be driven when the device is powered down.

[+] Feedback

Table 8. FX1 Pin Definitions (continued)

128 TQFP	100 TQFP	56 SSOP	56 QFN	Name	Type	Default	Description
99	77	49	42	RESET#	Input	N/A	**Active LOW Reset**. Resets the entire chip. See the section "Reset and Wakeup" on page 6 for more details.
35				EA	Input	N/A	**External Access**. This pin determines where the 8051 fetches code between addresses 0x0000 and 0x3FFF. If EA = 0 the 8051 fetches this code from its internal RAM. IF EA = 1 the 8051 fetches this code from external memory.
12	11	12	5	XTALIN	Input	N/A	**Crystal Input**. Connect this signal to a 24 MHz parallel-resonant, fundamental mode crystal and load capacitor to GND. It is also correct to drive the XTALIN with an external 24 MHz square wave derived from another clock source. When driving from an external source, the driving signal must be a 3.3V square wave.
11	10	11	4	XTALOUT	Output	N/A	**Crystal Output**. Connect this signal to a 24 MHz parallel-resonant, fundamental mode crystal and load capacitor to GND. If an external clock is used to drive XTALIN, leave this pin open.
1	100	5	54	CLKOUT	O/Z	12 MHz	**CLKOUT:** 12, 24 or 48 MHz clock, phase locked to the 24 MHz input clock. The 8051 defaults to 12 MHz operation. The 8051 may three-state this output by setting CPUCS.1 = 1.
Port A							
82	67	40	33	PA0 or INT0#	I/O/Z	I (PA0)	Multiplexed pin whose function is selected by PORTACFG.0 **PA0** is a bidirectional I/O port pin. **INT0#** is the active-LOW 8051 INT0 interrupt input signal, which is either edge triggered (IT0 = 1) or level triggered (IT0 = 0).
83	68	41	34	PA1 or INT1#	I/O/Z	I (PA1)	Multiplexed pin whose function is selected by: PORTACFG.1 **PA1** is a bidirectional I/O port pin. **INT1#** is the active-LOW 8051 INT1 interrupt input signal, which is either edge triggered (IT1 = 1) or level triggered (IT1 = 0).
84	69	42	35	PA2 or SLOE	I/O/Z	I (PA2)	Multiplexed pin whose function is selected by two bits: IFCONFIG[1:0]. **PA2** is a bidirectional I/O port pin. **SLOE** is an input-only output enable with programmable polarity (FIFOPINPOLAR.4) for the slave FIFOs connected to FD[7..0] or FD[15..0].
85	70	43	36	PA3 or WU2	I/O/Z	I (PA3)	Multiplexed pin whose function is selected by: WAKEUP.7 and OEA.3 **PA3** is a bidirectional I/O port pin. **WU2** is an alternate source for **USB Wakeup,** enabled by WU2EN bit (WAKEUP.1) and polarity set by WU2POL (WAKEUP.4). If the 8051 is in suspend and WU2EN = 1, a transition on this pin starts up the oscillator and interrupts the 8051 to allow it to exit the suspend mode. Asserting this pin inhibits the chip from suspending, if WU2EN = 1.
89	71	44	37	PA4 or FIFOADR0	I/O/Z	I (PA4)	Multiplexed pin whose function is selected by: IFCONFIG[1..0]. **PA4** is a bidirectional I/O port pin. **FIFOADR0** is an input-only address select for the slave FIFOs connected to FD[7..0] or FD[15..0].
90	72	45	38	PA5 or FIFOADR1	I/O/Z	I (PA5)	Multiplexed pin whose function is selected by: IFCONFIG[1..0]. **PA5** is a bidirectional I/O port pin. **FIFOADR1** is an input-only address select for the slave FIFOs connected to FD[7..0] or FD[15..0].

Table 8. FX1 Pin Definitions (continued)

128 TQFP	100 TQFP	56 SSOP	56 QFN	Name	Type	Default	Description
91	73	46	39	PA6 or PKTEND	I/O/Z	I (PA6)	Multiplexed pin whose function is selected by the IFCONFIG[1:0] bits. **PA6** is a bidirectional I/O port pin. **PKTEND** is an input used to commit the FIFO packet data to the endpoint and whose polarity is programmable via FIFOPINPOLAR.5.
92	74	47	40	PA7 or FLAGD or SLCS#	I/O/Z	I (PA7)	Multiplexed pin whose function is selected by the IFCONFIG[1:0] and PORTACFG.7 bits. **PA7** is a bidirectional I/O port pin. **FLAGD** is a programmable slave-FIFO output status flag signal. **SLCS#** gates all other slave FIFO enable/strobes
Port B							
44	34	25	18	PB0 or FD[0]	I/O/Z	I (PB0)	Multiplexed pin whose function is selected by the following bits: IFCONFIG[1..0]. **PB0** is a bidirectional I/O port pin. **FD[0]** is the bidirectional FIFO/GPIF data bus.
45	35	26	19	PB1 or FD[1]	I/O/Z	I (PB1)	Multiplexed pin whose function is selected by the following bits: IFCONFIG[1..0]. **PB1** is a bidirectional I/O port pin. **FD[1]** is the bidirectional FIFO/GPIF data bus.
46	36	27	20	PB2 or FD[2]	I/O/Z	I (PB2)	Multiplexed pin whose function is selected by the following bits: IFCONFIG[1..0]. **PB2** is a bidirectional I/O port pin. **FD[2]** is the bidirectional FIFO/GPIF data bus.
47	37	28	21	PB3 or FD[3]	I/O/Z	I (PB3)	Multiplexed pin whose function is selected by the following bits: IFCONFIG[1..0]. **PB3** is a bidirectional I/O port pin. **FD[3]** is the bidirectional FIFO/GPIF data bus.
54	44	29	22	PB4 or FD[4]	I/O/Z	I (PB4)	Multiplexed pin whose function is selected by the following bits: IFCONFIG[1..0]. **PB4** is a bidirectional I/O port pin. **FD[4]** is the bidirectional FIFO/GPIF data bus.
55	45	30	23	PB5 or FD[5]	I/O/Z	I (PB5)	Multiplexed pin whose function is selected by the following bits: IFCONFIG[1..0]. **PB5** is a bidirectional I/O port pin. **FD[5]** is the bidirectional FIFO/GPIF data bus.
56	46	31	24	PB6 or FD[6]	I/O/Z	I (PB6)	Multiplexed pin whose function is selected by the following bits: IFCONFIG[1..0]. **PB6** is a bidirectional I/O port pin. **FD[6]** is the bidirectional FIFO/GPIF data bus.
57	47	32	25	PB7 or FD[7]	I/O/Z	I (PB7)	Multiplexed pin whose function is selected by the following bits: IFCONFIG[1..0]. **PB7** is a bidirectional I/O port pin. **FD[7]** is the bidirectional FIFO/GPIF data bus.
PORT C							
72	57			PC0 or GPIFADR0	I/O/Z	I (PC0)	Multiplexed pin whose function is selected by PORTCCFG.0 **PC0** is a bidirectional I/O port pin. **GPIFADR0** is a GPIF address output pin.
73	58			PC1 or GPIFADR1	I/O/Z	I (PC1)	Multiplexed pin whose function is selected by PORTCCFG.1 **PC1** is a bidirectional I/O port pin. **GPIFADR1** is a GPIF address output pin.
74	59			PC2 or GPIFADR2	I/O/Z	I (PC2)	Multiplexed pin whose function is selected by PORTCCFG.2 **PC2** is a bidirectional I/O port pin. **GPIFADR2** is a GPIF address output pin.

Table 8. FX1 Pin Definitions (continued)

128 TQFP	100 TQFP	56 SSOP	56 QFN	Name	Type	Default	Description
75	60			PC3 or GPIFADR3	I/O/Z	I (PC3)	Multiplexed pin whose function is selected by PORTCCFG.3 **PC3** is a bidirectional I/O port pin. **GPIFADR3** is a GPIF address output pin.
76	61			PC4 or GPIFADR4	I/O/Z	I (PC4)	Multiplexed pin whose function is selected by PORTCCFG.4 **PC4** is a bidirectional I/O port pin. **GPIFADR4** is a GPIF address output pin.
77	62			PC5 or GPIFADR5	I/O/Z	I (PC5)	Multiplexed pin whose function is selected by PORTCCFG.5 **PC5** is a bidirectional I/O port pin. **GPIFADR5** is a GPIF address output pin.
78	63			PC6 or GPIFADR6	I/O/Z	I (PC6)	Multiplexed pin whose function is selected by PORTCCFG.6 **PC6** is a bidirectional I/O port pin. **GPIFADR6** is a GPIF address output pin.
79	64			PC7 or GPIFADR7	I/O/Z	I (PC7)	Multiplexed pin whose function is selected by PORTCCFG.7 **PC7** is a bidirectional I/O port pin. **GPIFADR7** is a GPIF address output pin.
PORT D							
102	80	52	45	PD0 or FD[8]	I/O/Z	I (PD0)	Multiplexed pin whose function is selected by the IFCONFIG[1..0] and EPxFIFOCFG.0 (wordwide) bits. **FD[8]** is the bidirectional FIFO/GPIF data bus.
103	81	53	46	PD1 or FD[9]	I/O/Z	I (PD1)	Multiplexed pin whose function is selected by the IFCONFIG[1..0] and EPxFIFOCFG.0 (wordwide) bits. **FD[9]** is the bidirectional FIFO/GPIF data bus.
104	82	54	47	PD2 or FD[10]	I/O/Z	I (PD2)	Multiplexed pin whose function is selected by the IFCONFIG[1..0] and EPxFIFOCFG.0 (wordwide) bits. **FD[10]** is the bidirectional FIFO/GPIF data bus.
105	83	55	48	PD3 or FD[11]	I/O/Z	I (PD3)	Multiplexed pin whose function is selected by the IFCONFIG[1..0] and EPxFIFOCFG.0 (wordwide) bits. **FD[11]** is the bidirectional FIFO/GPIF data bus.
121	95	56	49	PD4 or FD[12]	I/O/Z	I (PD4)	Multiplexed pin whose function is selected by the IFCONFIG[1..0] and EPxFIFOCFG.0 (wordwide) bits. **FD[12]** is the bidirectional FIFO/GPIF data bus.
122	96	1	50	PD5 or FD[13]	I/O/Z	I (PD5)	Multiplexed pin whose function is selected by the IFCONFIG[1..0] and EPxFIFOCFG.0 (wordwide) bits. **FD[13]** is the bidirectional FIFO/GPIF data bus.
123	97	2	51	PD6 or FD[14]	I/O/Z	I (PD6)	Multiplexed pin whose function is selected by the IFCONFIG[1..0] and EPxFIFOCFG.0 (wordwide) bits. **FD[14]** is the bidirectional FIFO/GPIF data bus.
124	98	3	52	PD7 or FD[15]	I/O/Z	I (PD7)	Multiplexed pin whose function is selected by the IFCONFIG[1..0] and EPxFIFOCFG.0 (wordwide) bits. **FD[15]** is the bidirectional FIFO/GPIF data bus.
Port E							
108	86			PE0 or T0OUT	I/O/Z	I (PE0)	Multiplexed pin whose function is selected by the PORTECFG.0 bit. **PE0** is a bidirectional I/O port pin. **T0OUT** is an active HIGH signal from 8051 Timer-counter0. T0OUT outputs a high level for one CLKOUT clock cycle when Timer0 overflows. If Timer0 is operated in Mode 3 (two separate timer/counters), T0OUT is active when the low byte timer/counter overflows.

Table 8. FX1 Pin Definitions (continued)

128 TQFP	100 TQFP	56 SSOP	56 QFN	Name	Type	Default	Description
109	87			PE1 or T1OUT	I/O/Z	I (PE1)	Multiplexed pin whose function is selected by the PORTECFG.1 bit. **PE1** is a bidirectional I/O port pin. **T1OUT** is an active HIGH signal from 8051 Timer-counter1. T1OUT outputs a high level for one CLKOUT clock cycle when Timer1 overflows. If Timer1 is operated in Mode 3 (two separate timer/counters), T1OUT is active when the low byte timer/counter overflows.
110	88			PE2 or T2OUT	I/O/Z	I (PE2)	Multiplexed pin whose function is selected by the PORTECFG.2 bit. **PE2** is a bidirectional I/O port pin. **T2OUT** is the active HIGH output signal from 8051 Timer2. T2OUT is active (HIGH) for one clock cycle when Timer/Counter 2 overflows.
111	89			PE3 or RXD0OUT	I/O/Z	I (PE3)	Multiplexed pin whose function is selected by the PORTECFG.3 bit. **PE3** is a bidirectional I/O port pin. **RXD0OUT** is an active HIGH signal from 8051 UART0. If RXD0OUT is selected and UART0 is in Mode 0, this pin provides the output data for UART0 only when it is in sync mode. Otherwise it is a 1.
112	90			PE4 or RXD1OUT	I/O/Z	I (PE4)	Multiplexed pin whose function is selected by the PORTECFG.4 bit. **PE4** is a bidirectional I/O port pin. **RXD1OUT** is an active HIGH output from 8051 UART1. When the RXD1OUT is selected and UART1 is in Mode 0, this pin provides the output data for UART1 only when it is in sync mode. In Modes 1, 2, and 3, this pin is HIGH.
113	91			PE5 or INT6	I/O/Z	I (PE5)	Multiplexed pin whose function is selected by the PORTECFG.5 bit. **PE5** is a bidirectional I/O port pin. **INT6** is the 8051 INT6 interrupt request input signal. The INT6 pin is edge-sensitive, active HIGH.
114	92			PE6 or T2EX	I/O/Z	I (PE6)	Multiplexed pin whose function is selected by the PORTECFG.6 bit. **PE6** is a bidirectional I/O port pin. **T2EX** is an active HIGH input signal to the 8051 Timer2. T2EX reloads timer 2 on its falling edge. T2EX is active only if the EXEN2 bit is set in T2CON.
115	93			PE7 or GPIFADR8	I/O/Z	I (PE7)	Multiplexed pin whose function is selected by the PORTECFG.7 bit. **PE7** is a bidirectional I/O port pin. **GPIFADR8** is a GPIF address output pin.
4	3	8	1	RDY0 or SLRD	Input	N/A	Multiplexed pin whose function is selected by the following bits: IFCONFIG[1..0]. **RDY0** is a GPIF input signal. **SLRD** is the input-only read strobe with programmable polarity (FIFOPINPOLAR.3) for the slave FIFOs connected to FD[7..0] or FD[15..0].
5	4	9	2	RDY1 or SLWR	Input	N/A	Multiplexed pin whose function is selected by the following bits: IFCONFIG[1..0]. **RDY1** is a GPIF input signal. **SLWR** is the input-only write strobe with programmable polarity (FIFOPINPOLAR.2) for the slave FIFOs connected to FD[7..0] or FD[15..0].
6	5			RDY2	Input	N/A	**RDY2** is a GPIF input signal.
7	6			RDY3	Input	N/A	**RDY3** is a GPIF input signal.
8	7			RDY4	Input	N/A	**RDY4** is a GPIF input signal.
9	8			RDY5	Input	N/A	**RDY5** is a GPIF input signal.

Table 8. FX1 Pin Definitions (continued)

128 TQFP	100 TQFP	56 SSOP	56 QFN	Name	Type	Default	Description
69	54	36	29	CTL0 or FLAGA	O/Z	H	Multiplexed pin whose function is selected by the following bits: IFCONFIG[1..0]. **CTL0** is a GPIF control output. **FLAGA** is a programmable slave-FIFO output status flag signal. Defaults to programmable for the FIFO selected by the FIFOADR[1:0] pins.
70	55	37	30	CTL1 or FLAGB	O/Z	H	Multiplexed pin whose function is selected by the following bits: IFCONFIG[1..0]. **CTL1** is a GPIF control output. **FLAGB** is a programmable slave-FIFO output status flag signal. Defaults to FULL for the FIFO selected by the FIFOADR[1:0] pins.
71	56	38	31	CTL2 or FLAGC	O/Z	H	Multiplexed pin whose function is selected by the following bits: IFCONFIG[1..0]. **CTL2** is a GPIF control output. **FLAGC** is a programmable slave-FIFO output status flag signal. Defaults to EMPTY for the FIFO selected by the FIFOADR[1:0] pins.
66	51			CTL3	O/Z	H	**CTL3** is a GPIF control output.
67	52			CTL4	Output	H	**CTL4** is a GPIF control output.
98	76			CTL5	Output	H	**CTL5** is a GPIF control output.
32	26	20	13	IFCLK	I/O/Z	Z	Interface Clock, used for synchronously clocking data into or out of the slave FIFOs. IFCLK also serves as a timing reference for all slave FIFO control signals and GPIF. When internal clocking is used (IFCONFIG.7 = 1) the IFCLK pin is configured to output 30/48 MHz by bits IFCONFIG.5 and IFCONFIG.6. IFCLK may be inverted, whether internally or externally sourced, by setting the bit IFCONFIG.4 = 1.
28	22			INT4	Input	N/A	**INT4** is the 8051 INT4 interrupt request input signal. The INT4 pin is edge-sensitive, active HIGH.
106	84			INT5#	Input	N/A	**INT5#** is the 8051 INT5 interrupt request input signal. The INT5 pin is edge-sensitive, active LOW.
31	25			T2	Input	N/A	**T2** is the active-HIGH T2 input signal to 8051 Timer2, which provides the input to Timer2 when C/T2 = 1. When C/T2 = 0, Timer2 does not use this pin.
30	24			T1	Input	N/A	**T1** is the active-HIGH T1 signal for 8051 Timer1, which provides the input to Timer1 when C/T1 is 1. When C/T1 is 0, Timer1 does not use this bit.
29	23			T0	Input	N/A	**T0** is the active-HIGH T0 signal for 8051 Timer0, which provides the input to Timer0 when C/T0 is 1. When C/T0 is 0, Timer0 does not use this bit.
53	43			RXD1	Input	N/A	**RXD1**is an active-HIGH input signal for 8051 UART1, which provides data to the UART in all modes.
52	42			TXD1	Output	H	**TXD1**is an active-HIGH output pin from 8051 UART1, which provides the output clock in sync mode, and the output data in async mode.
51	41			RXD0	Input	N/A	**RXD0** is the active-HIGH RXD0 input to 8051 UART0, which provides data to the UART in all modes.
50	40			TXD0	Output	H	**TXD0** is the active-HIGH TXD0 output from 8051 UART0, which provides the output clock in sync mode, and the output data in async mode.
42				CS#	Output	H	**CS#** is the active-LOW chip select for external memory.
41	32			WR#	Output	H	**WR#** is the active-LOW write strobe output for external memory.
40	31			RD#	Output	H	**RD#** is the active-LOW read strobe output for external memory.
38				OE#	Output	H	**OE#** is the active LOW output enable for external memory.

[+] Feedback

Table 8. FX1 Pin Definitions (continued)

128 TQFP	100 TQFP	56 SSOP	56 QFN	Name	Type	Default	Description
33	27	21	14	Reserved	Input	N/A	**Reserved**. Connect to ground.
101	79	51	44	WAKEUP	Input	N/A	**USB Wakeup**. If the 8051 is in suspend, asserting this pin starts up the oscillator and interrupts the 8051 to allow it to exit the suspend mode. Holding WAKEUP asserted inhibits the EZ-USB FX1 chip from suspending. This pin has programmable polarity (WAKEUP.4).
36	29	22	15	SCL	OD	Z	**Clock** for the I^2C interface. Connect to VCC with a 2.2K resistor, even if no I^2C peripheral is attached.
37	30	23	16	SDA	OD	Z	**Data** for **I^2C interface**. Connect to VCC with a 2.2K resistor, **even if no I^2C peripheral is attached**.
2	1	6	55	VCC	Power	N/A	**VCC**. Connect to 3.3V power source.
26	20	18	11	VCC	Power	N/A	**VCC**. Connect to 3.3V power source.
43	33	24	17	VCC	Power	N/A	**VCC**. Connect to 3.3V power source.
48	38			VCC	Power	N/A	**VCC**. Connect to 3.3V power source.
64	49	34	27	VCC	Power	N/A	**VCC**. Connect to 3.3V power source.
68	53			VCC	Power	N/A	**VCC**. Connect to 3.3V power source.
81	66	39	32	VCC	Power	N/A	**VCC**. Connect to 3.3V power source.
100	78	50	43	VCC	Power	N/A	**VCC**. Connect to 3.3V power source.
107	85			VCC	Power	N/A	**VCC**. Connect to 3.3V power source.
3	2	7	56	GND	Ground	N/A	**Ground**.
27	21	19	12	GND	Ground	N/A	**Ground**.
49	39			GND	Ground	N/A	**Ground**.
58	48	33	26	GND	Ground	N/A	**Ground**.
65	50	35	28	GND	Ground	N/A	**Ground**.
80	65			GND	Ground	N/A	**Ground**.
93	75	48	41	GND	Ground	N/A	**Ground**.
116	94			GND	Ground	N/A	**Ground**.
125	99	4	53	GND	Ground	N/A	**Ground**.
14	13			NC	N/A	N/A	**No Connect**. This pin must be left open.
15	14			NC	N/A	N/A	**No Connect**. This pin must be left open.
16	15			NC	N/A	N/A	**No Connect**. This pin must be left open.

Register Summary

FX1 register bit definitions are described in the EZ-USB TRM in greater detail.

Table 9. FX1 Register Summary

Hex	Size	Name	Description	b7	b6	b5	b4	b3	b2	b1	b0	Default	Access
		GPIF Waveform Memories											
E400	128	WAVEDATA	GPIF Waveform Descriptor 0, 1, 2, 3 data	D7	D6	D5	D4	D3	D2	D1	D0	xxxxxxxx	RW
E480	128	reserved											
		GENERAL CONFIGURATION											
E600	1	CPUCS	CPU Control & Status	0	0	PORTCSTB	CLKSPD1	CLKSPD0	CLKINV	CLKOE	8051RES	00000010	rrbbbbbr
E601	1	IFCONFIG	Interface Configuration (Ports, GPIF, slave FIFOs)	IFCLKSRC	3048MHZ	IFCLKOE	IFCLKPOL	ASYNC	GSTATE	IFCFG1	IFCFG0	10000000	RW
E602	1	PINFLAGSAB[7]	Slave FIFO FLAGA and FLAGB Pin Configuration	FLAGB3	FLAGB2	FLAGB1	FLAGB0	FLAGA3	FLAGA2	FLAGA1	FLAGA0	00000000	RW
E603	1	PINFLAGSCD[7]	Slave FIFO FLAGC and FLAGD Pin Configuration	FLAGD3	FLAGD2	FLAGD1	FLAGD0	FLAGC3	FLAGC2	FLAGC1	FLAGC0	00000000	RW
E604	1	FIFORESET[7]	Restore FIFOS to default state	NAKALL	0	0	0	EP3	EP2	EP1	EP0	xxxxxxxx	W
E605	1	BREAKPT	Breakpoint Control	0	0	0	0	BREAK	BPPULSE	BPEN	0	00000000	rrrrbbbr
E606	1	BPADDRH	Breakpoint Address H	A15	A14	A13	A12	A11	A10	A9	A8	xxxxxxxx	RW
E607	1	BPADDRL	Breakpoint Address L	A7	A6	A5	A4	A3	A2	A1	A0	xxxxxxxx	RW
E608	1	UART230	230 Kbaud internally generated ref. clock	0	0	0	0	0	0	230UART1	230UART0	00000000	rrrrrrbb
E609	1	FIFOPINPOLAR[7]	Slave FIFO Interface pins polarity	0	0	PKTEND	SLOE	SLRD	SLWR	EF	FF	00000000	rrbbbbbb
E60A	1	REVID	Chip Revision	rv7	rv6	rv5	rv4	rv3	rv2	rv1	rv0	RevA 00000001	R
E60B	1	REVCTL[7]	Chip Revision Control	0	0	0	0	0	0	dyn_out	enh_pkt	00000000	rrrrrrbb
		UDMA											
E60C	1	GPIFHOLDAMOUNT	MSTB Hold Time (for UDMA)	0	0	0	0	0	0	HOLDTIME1	HOLDTIME0	00000000	rrrrrrbb
	3	reserved											
		ENDPOINT CONFIGURATION											
E610	1	EP1OUTCFG	Endpoint 1-OUT Configuration	VALID	0	TYPE1	TYPE0	0	0	0	0	10100000	brbbrrrr
E611	1	EP1INCFG	Endpoint 1-IN Configuration	VALID	0	TYPE1	TYPE0	0	0	0	0	10100000	brbbrrrr
E612	1	EP2CFG	Endpoint 2 Configuration	VALID	DIR	TYPE1	TYPE0	SIZE	0	BUF1	BUF0	10100010	bbbbbrbb
E613	1	EP4CFG	Endpoint 4 Configuration	VALID	DIR	TYPE1	TYPE0	0	0	0	0	10100000	bbbbrrrr
E614	1	EP6CFG	Endpoint 6 Configuration	VALID	DIR	TYPE1	TYPE0	SIZE	0	BUF1	BUF0	11100010	bbbbbrbb
E615	1	EP8CFG	Endpoint 8 Configuration	VALID	DIR	TYPE1	TYPE0	0	0	0	0	11100000	bbbbrrrr
	2	reserved											
E618	1	EP2FIFOCFG[7]	Endpoint 2 / slave FIFO configuration	0	INFM1	OEP1	AUTOOUT	AUTOIN	ZEROLENIN	0	WORDWIDE	00000101	rbbbbbrb
E619	1	EP4FIFOCFG[7]	Endpoint 4 / slave FIFO configuration	0	INFM1	OEP1	AUTOOUT	AUTOIN	ZEROLENIN	0	WORDWIDE	00000101	rbbbbbrb
E61A	1	EP6FIFOCFG[7]	Endpoint 6 / slave FIFO configuration	0	INFM1	OEP1	AUTOOUT	AUTOIN	ZEROLENIN	0	WORDWIDE	00000101	rbbbbbrb
E61B	1	EP8FIFOCFG[7]	Endpoint 8 / slave FIFO configuration	0	INFM1	OEP1	AUTOOUT	AUTOIN	ZEROLENIN	0	WORDWIDE	00000101	rbbbbbrb
E61C	4	reserved											
E620	1	EP2AUTOINLENH[7]	Endpoint 2 AUTOIN Packet Length H	0	0	0	0	0	PL10	PL9	PL8	00000010	rrrrrbbb
E621	1	EP2AUTOINLENL[7]	Endpoint 2 AUTOIN Packet Length L	PL7	PL6	PL5	PL4	PL3	PL2	PL1	PL0	00000000	RW
E622	1	EP4AUTOINLENH[7]	Endpoint 4 AUTOIN Packet Length H	0	0	0	0	0	0	PL9	PL8	00000010	rrrrrrbb
E623	1	EP4AUTOINLENL[7]	Endpoint 4 AUTOIN Packet Length L	PL7	PL6	PL5	PL4	PL3	PL2	PL1	PL0	00000000	RW
E624	1	EP6AUTOINLENH[7]	Endpoint 6 AUTOIN Packet Length H	0	0	0	0	0	PL10	PL9	PL8	00000010	rrrrrbbb
E625	1	EP6AUTOINLENL[7]	Endpoint 6 AUTOIN Packet Length L	PL7	PL6	PL5	PL4	PL3	PL2	PL1	PL0	00000000	RW
E626	1	EP8AUTOINLENH[7]	Endpoint 8 AUTOIN Packet Length H	0	0	0	0	0	0	PL9	PL8	00000010	rrrrrrbb
E627	1	EP8AUTOINLENL[7]	Endpoint 8 AUTOIN Packet Length L	PL7	PL6	PL5	PL4	PL3	PL2	PL1	PL0	00000000	RW
E628	1	ECCCFG	ECC Configuration	0	0	0	0	0	0	0	ECCM	00000000	rrrrrrrb
E629	1	ECCRESET	ECC Reset	x	x	x	x	x	x	x	x	00000000	W
E62A	1	ECC1B0	ECC1 Byte 0 Address	LINE15	LINE14	LINE13	LINE12	LINE11	LINE10	LINE9	LINE8	11111111	R
E62B	1	ECC1B1	ECC1 Byte 1 Address	LINE7	LINE6	LINE5	LINE4	LINE3	LINE2	LINE1	LINE0	11111111	R
E62C	1	ECC1B2	ECC1 Byte 2 Address	COL5	COL4	COL3	COL2	COL1	COL0	LINE17	LINE16	11111111	R
E62D	1	ECC2B0	ECC2 Byte 0 Address	LINE15	LINE14	LINE13	LINE12	LINE11	LINE10	LINE9	LINE8	11111111	R
E62E	1	ECC2B1	ECC2 Byte 1 Address	LINE7	LINE6	LINE5	LINE4	LINE3	LINE2	LINE1	LINE0	11111111	R

Note

7. Read and writes to these register may require synchronization delay, see the section “Synchronization Delay” in the EZ-USB TRM.

[+] Feedback

Table 9. FX1 Register Summary (continued)

Hex	Size	Name	Description	b7	b6	b5	b4	b3	b2	b1	b0	Default	Access
E62F	1	ECC2B2	ECC2 Byte 2 Address	COL5	COL4	COL3	COL2	COL1	COL0	0	0	11111111	R
E630	1	EP2FIFOPFH[7]	Endpoint 2 / slave FIFO Programmable Flag H ISO Mode	DECIS	PKTSTAT	IN: PKTS[2] OUT:PFC12	IN: PKTS[1] OUT:PFC11	IN: PKTS[0] OUT:PFC10	0	PFC9	PFC8	10001000	bbbbbrbb
E630	1	EP2FIFOPFH[7]	Endpoint 2 / slave FIFO Programmable Flag H Non-ISO Mode	DECIS	PKTSTAT	OUT:PFC12	OUT:PFC11	OUT:PFC10	0	PFC9	IN:PKTS[2] OUT:PFC8	10001000	bbbbbrbb
E631	1	EP2FIFOPFL[7]	Endpoint 2 / slave FIFO Programmable Flag L	IN:PKTS[1] OUT:PFC7	IN:PKTS[0] OUT:PFC6	PFC5	PFC4	PFC3	PFC2	PFC1	PFC0	00000000	RW
E632	1	EP4FIFOPFH[7]	Endpoint 4 / slave FIFO Programmable Flag H ISO Mode	DECIS	PKTSTAT	0	IN: PKTS[1] OUT:PFC10	IN: PKTS[0] OUT:PFC9	0	0	PFC8	10001000	bbrbbrrb
E632	1	EP4FIFOPFH[7]	Endpoint 4 / slave FIFO Programmable Flag H Non-ISO Mode	DECIS	PKTSTAT	0	OUT:PFC10	OUT:PFC9	0	0	PFC8	10001000	bbrbbrrb
E633	1	EP4FIFOPFL[7]	Endpoint 4 / slave FIFO Programmable Flag L	IN: PKTS[1] OUT:PFC7	IN: PKTS[0] OUT:PFC6	PFC5	PFC4	PFC3	PFC2	PFC1	PFC0	00000000	RW
E634	1	EP6FIFOPFH[7]	Endpoint 6 / slave FIFO Programmable Flag H ISO Mode	DECIS	PKTSTAT	INPKTS[2] OUT:PFC12	IN: PKTS[1] OUT:PFC11	IN: PKTS[0] OUT:PFC10	0	PFC9	PFC8	00001000	bbbbbrbb
E634	1	EP6FIFOPFH[7]	Endpoint 6 / slave FIFO Programmable Flag H Non-ISO Mode	DECIS	PKTSTAT	OUT:PFC12	OUT:PFC11	OUT:PFC10	0	PFC9	IN:PKTS[2] OUT:PFC8	00001000	bbbbbrbb
E635	1	EP6FIFOPFL[7]	Endpoint 6 / slave FIFO Programmable Flag L	IN:PKTS[1] OUT:PFC7	IN:PKTS[0] OUT:PFC6	PFC5	PFC4	PFC3	PFC2	PFC1	PFC0	00000000	RW
E636	1	EP8FIFOPFH[7]	Endpoint 8 / slave FIFO Programmable Flag H ISO Mode	DECIS	PKTSTAT	0	IN: PKTS[1] OUT:PFC10	IN: PKTS[0] OUT:PFC9	0	0	PFC8	00001000	bbrbbrrb
E636	1	EP8FIFOPFH[7]	Endpoint 8 / slave FIFO Programmable Flag H Non-ISO Mode	DECIS	PKTSTAT	0	OUT:PFC10	OUT:PFC9	0	0	PFC8	00001000	bbrbbrrb
E637	1	EP8FIFOPFL[7] ISO Mode	Endpoint 8 / slave FIFO Programmable Flag L	PFC7	PFC6	PFC5	PFC4	PFC3	PFC2	PFC1	PFC0	00000000	RW
E637	1	EP8FIFOPFL[7] Non-ISO Mode	Endpoint 8 / slave FIFO Programmable Flag L	IN: PKTS[1] OUT:PFC7	IN: PKTS[0] OUT:PFC6	PFC5	PFC4	PFC3	PFC2	PFC1	PFC0	00000000	RW
	8	reserved											
E640	1	reserved											
E641	1	reserved											
E642	1	reserved											
E643	1	reserved											
E644	4	reserved											
E648	1	INPKTEND[7]	Force IN Packet End	Skip	0	0	0	EP3	EP2	EP1	EP0	xxxxxxxx	W
E649	7	OUTPKTEND[7]	Force OUT Packet End	Skip	0	0	0	EP3	EP2	EP1	EP0	xxxxxxxx	W
		INTERRUPTS											
E650	1	EP2FIFOIE[7]	Endpoint 2 slave FIFO Flag Interrupt Enable	0	0	0	0	EDGEPF	PF	EF	FF	00000000	RW
E651	1	EP2FIFOIRQ[7,8]	Endpoint 2 slave FIFO Flag Interrupt Request	0	0	0	0	0	PF	EF	FF	00000111	rrrrrbbb
E652	1	EP4FIFOIE[7]	Endpoint 4 slave FIFO Flag Interrupt Enable	0	0	0	0	EDGEPF	PF	EF	FF	00000000	RW
E653	1	EP4FIFOIRQ[7,8]	Endpoint 4 slave FIFO Flag Interrupt Request	0	0	0	0	0	PF	EF	FF	00000111	rrrrrbbb
E654	1	EP6FIFOIE[7]	Endpoint 6 slave FIFO Flag Interrupt Enable	0	0	0	0	EDGEPF	PF	EF	FF	00000000	RW
E655	1	EP6FIFOIRQ[7,8]	Endpoint 6 slave FIFO Flag Interrupt Request	0	0	0	0	0	PF	EF	FF	00000110	rrrrrbbb
E656	1	EP8FIFOIE[7]	Endpoint 8 slave FIFO Flag Interrupt Enable	0	0	0	0	EDGEPF	PF	EF	FF	00000000	RW
E657	1	EP8FIFOIRQ[7,8]	Endpoint 8 slave FIFO Flag Interrupt Request	0	0	0	0	0	PF	EF	FF	00000110	rrrrrbbb
E658	1	IBNIE	IN-BULK-NAK Interrupt Enable	0	0	EP8	EP6	EP4	EP2	EP1	EP0	00000000	RW

Note
8. SFRs not part of the standard 8051 architecture.
9. The register can only be reset. It cannot be set.

[+] Feedback

Table 9. FX1 Register Summary (continued)

Hex	Size	Name	Description	b7	b6	b5	b4	b3	b2	b1	b0	Default	Access
E659	1	IBNIRQ[8]	IN-BULK-NAK interrupt Request	0	0	EP8	EP6	EP4	EP2	EP1	EP0	00xxxxxx	rrbbbbbb
E65A	1	NAKIE	Endpoint Ping-NAK / IBN Interrupt Enable	EP8	EP6	EP4	EP2	EP1	EP0	0	IBN	00000000	RW
E65B	1	NAKIRQ[8]	Endpoint Ping-NAK / IBN Interrupt Request	EP8	EP6	EP4	EP2	EP1	EP0	0	IBN	xxxxxx0x	bbbbbbrb
E65C	1	USBIE	USB Int Enables	0	EP0ACK	0	URES	SUSP	SUTOK	SOF	SUDAV	00000000	RW
E65D	1	USBIRQ[8]	USB Interrupt Requests	0	EP0ACK	0	URES	SUSP	SUTOK	SOF	SUDAV	0xxxxxxx	rbbbbbbb
E65E	1	EPIE	Endpoint Interrupt Enables	EP8	EP6	EP4	EP2	EP1OUT	EP1IN	EP0OUT	EP0IN	00000000	RW
E65F	1	EPIRQ[8]	Endpoint Interrupt Requests	EP8	EP6	EP4	EP2	EP1OUT	EP1IN	EP0OUT	EP0IN	0	RW
E660	1	GPIFIE[7]	GPIF Interrupt Enable	0	0	0	0	0	0	GPIFWF	GPIFDONE	00000000	RW
E661	1	GPIFIRQ[7]	GPIF Interrupt Request	0	0	0	0	0	0	GPIFWF	GPIFDONE	000000xx	RW
E662	1	USBERRIE	USB Error Interrupt Enables	ISOEP8	ISOEP6	ISOEP4	ISOEP2	0	0	0	ERRLIMIT	00000000	RW
E663	1	USBERRIRQ[8]	USB Error Interrupt Requests	ISOEP8	ISOEP6	ISOEP4	ISOEP2	0	0	0	ERRLIMIT	0000000x	bbbbrrrb
E664	1	ERRCNTLIM	USB Error counter and limit	EC3	EC2	EC1	EC0	LIMIT3	LIMIT2	LIMIT1	LIMIT0	xxxx0100	rrrrbbbb
E665	1	CLRERRCNT	Clear Error Counter EC3:0	x	x	x	x	x	x	x	x	xxxxxxxx	W
E666	1	INT2IVEC	Interrupt 2 (USB) Autovector	0	I2V4	I2V3	I2V2	I2V1	I2V0	0	0	00000000	R
E667	1	INT4IVEC	Interrupt 4 (slave FIFO & GPIF) Autovector	1	0	I4V3	I4V2	I4V1	I4V0	0	0	10000000	R
E668	1	INTSETUP	Interrupt 2&4 setup	0	0	0	0	AV2EN	0	INT4SRC	AV4EN	00000000	RW
E669	7	reserved											
		INPUT / OUTPUT											
E670	1	PORTACFG	I/O PORTA Alternate Configuration	FLAGD	SLCS	0	0	0	0	INT1	INT0	00000000	RW
E671	1	PORTCCFG	I/O PORTC Alternate Configuration	GPIFA7	GPIFA6	GPIFA5	GPIFA4	GPIFA3	GPIFA2	GPIFA1	GPIFA0	00000000	RW
E672	1	PORTECFG	I/O PORTE Alternate Configuration	GPIFA8	T2EX	INT6	RXD1OUT	RXD0OUT	T2OUT	T1OUT	T0OUT	00000000	RW
E673	4	XTALINSRC	XTALIN Clock Source	0	0	0	0	0	0	0	EXTCLK	00000000	rrrrrrrb
E677	1	reserved											
E678	1	I2CS	I²C Bus Control & Status	START	STOP	LASTRD	ID1	ID0	BERR	ACK	DONE	000xx000	bbbrrrrr
E679	1	I2DAT	I²C Bus Data	d7	d6	d5	d4	d3	d2	d1	d0	xxxxxxxx	RW
E67A	1	I2CTL	I²C Bus Control	0	0	0	0	0	0	STOPIE	400KHZ	00000000	RW
E67B	1	XAUTODAT1	Autoptr1 MOVX access, when APTREN=1	D7	D6	D5	D4	D3	D2	D1	D0	xxxxxxxx	RW
E67C	1	XAUTODAT2	Autoptr2 MOVX access, when APTREN=1	D7	D6	D5	D4	D3	D2	D1	D0	xxxxxxxx	RW
		UDMA CRC											
E67D	1	UDMACRCH[7]	UDMA CRC MSB	CRC15	CRC14	CRC13	CRC12	CRC11	CRC10	CRC9	CRC8	01001010	RW
E67E	1	UDMACRCL[7]	UDMA CRC LSB	CRC7	CRC6	CRC5	CRC4	CRC3	CRC2	CRC1	CRC0	10111010	RW
E67F	1	UDMACRC-QUALIFIER	UDMA CRC Qualifier	QENABLE	0	0	0	QSTATE	QSIGNAL2	QSIGNAL1	QSIGNAL0	00000000	brrrbbbb
		USB CONTROL											
E680	1	USBCS	USB Control & Status	0	0	0	0	DISCON	NOSYNSOF	RENUM	SIGRSUME	x0000000	rrrrbbbb
E681	1	SUSPEND	Put chip into suspend	x	x	x	x	x	x	x	x	xxxxxxxx	W
E682	1	WAKEUPCS	Wakeup Control & Status	WU2	WU	WU2POL	WUPOL	0	DPEN	WU2EN	WUEN	xx000101	bbbbrbbb
E683	1	TOGCTL	Toggle Control	Q	S	R	I/O	EP3	EP2	EP1	EP0	x0000000	rrrbbbbb
E684	1	USBFRAMEH	USB Frame count H	0	0	0	0	0	FC10	FC9	FC8	00000xxx	R
E685	1	USBFRAMEL	USB Frame count L	FC7	FC6	FC5	FC4	FC3	FC2	FC1	FC0	xxxxxxxx	R
E686	1	reserved											
E687	1	FNADDR	USB Function address	0	FA6	FA5	FA4	FA3	FA2	FA1	FA0	0xxxxxxx	R
E688	2	reserved											
		ENDPOINTS											
E68A	1	EP0BCH[7]	Endpoint 0 Byte Count H	(BC15)	(BC14)	(BC13)	(BC12)	(BC11)	(BC10)	(BC9)	(BC8)	xxxxxxxx	RW
E68B	1	EP0BCL[7]	Endpoint 0 Byte Count L	(BC7)	BC6	BC5	BC4	BC3	BC2	BC1	BC0	xxxxxxxx	RW
E68C	1	reserved											
E68D	1	EP1OUTBC	Endpoint 1 OUT Byte Count	0	BC6	BC5	BC4	BC3	BC2	BC1	BC0	xxxxxxxx	RW
E68E	1	reserved											
E68F	1	EP1INBC	Endpoint 1 IN Byte Count	0	BC6	BC5	BC4	BC3	BC2	BC1	BC0	xxxxxxxx	RW
E690	1	EP2BCH[7]	Endpoint 2 Byte Count H	0	0	0	0	0	BC10	BC9	BC8	xxxxxxxx	RW
E691	1	EP2BCL[7]	Endpoint 2 Byte Count L	BC7/SKIP	BC6	BC5	BC4	BC3	BC2	BC1	BC0	xxxxxxxx	RW
E692	2	reserved											
E694	1	EP4BCH[7]	Endpoint 4 Byte Count H	0	0	0	0	0	0	BC9	BC8	xxxxxxxx	RW

Table 9. FX1 Register Summary (continued)

Hex	Size	Name	Description	b7	b6	b5	b4	b3	b2	b1	b0	Default	Access
E695	1	EP4BCL[7]	Endpoint 4 Byte Count L	BC7/SKIP	BC6	BC5	BC4	BC3	BC2	BC1	BC0	xxxxxxxx	RW
E696	2	reserved											
E698	1	EP6BCH[7]	Endpoint 6 Byte Count H	0	0	0	0	0	BC10	BC9	BC8	xxxxxxxx	RW
E699	1	EP6BCL[7]	Endpoint 6 Byte Count L	BC7/SKIP	BC6	BC5	BC4	BC3	BC2	BC1	BC0	xxxxxxxx	RW
E69A	2	reserved											
E69C	1	EP8BCH[7]	Endpoint 8 Byte Count H	0	0	0	0	0	0	BC9	BC8	xxxxxxxx	RW
E69D	1	EP8BCL[7]	Endpoint 8 Byte Count L	BC7/SKIP	BC6	BC5	BC4	BC3	BC2	BC1	BC0	xxxxxxxx	RW
E69E	2	reserved											
E6A0	1	EP0CS	Endpoint 0 Control and Status	HSNAK	0	0	0	0	0	BUSY	STALL	10000000	bbbbbbrb
E6A1	1	EP1OUTCS	Endpoint 1 OUT Control and Status	0	0	0	0	0	0	BUSY	STALL	00000000	bbbbbbrb
E6A2	1	EP1INCS	Endpoint 1 IN Control and Status	0	0	0	0	0	0	BUSY	STALL	00000000	bbbbbbrb
E6A3	1	EP2CS	Endpoint 2 Control and Status	0	NPAK2	NPAK1	NPAK0	FULL	EMPTY	0	STALL	00101000	rrrrrrrb
E6A4	1	EP4CS	Endpoint 4 Control and Status	0	0	NPAK1	NPAK0	FULL	EMPTY	0	STALL	00101000	rrrrrrrb
E6A5	1	EP6CS	Endpoint 6 Control and Status	0	NPAK2	NPAK1	NPAK0	FULL	EMPTY	0	STALL	00000100	rrrrrrrb
E6A6	1	EP8CS	Endpoint 8 Control and Status	0	0	NPAK1	NPAK0	FULL	EMPTY	0	STALL	00000100	rrrrrrrb
E6A7	1	EP2FIFOFLGS	Endpoint 2 slave FIFO Flags	0	0	0	0	0	PF	EF	FF	00000010	R
E6A8	1	EP4FIFOFLGS	Endpoint 4 slave FIFO Flags	0	0	0	0	0	PF	EF	FF	00000010	R
E6A9	1	EP6FIFOFLGS	Endpoint 6 slave FIFO Flags	0	0	0	0	0	PF	EF	FF	00000110	R
E6AA	1	EP8FIFOFLGS	Endpoint 8 slave FIFO Flags	0	0	0	0	0	PF	EF	FF	00000110	R
E6AB	1	EP2FIFOBCH	Endpoint 2 slave FIFO total byte count H	0	0	0	BC12	BC11	BC10	BC9	BC8	00000000	R
E6AC	1	EP2FIFOBCL	Endpoint 2 slave FIFO total byte count L	BC7	BC6	BC5	BC4	BC3	BC2	BC1	BC0	00000000	R
E6AD	1	EP4FIFOBCH	Endpoint 4 slave FIFO total byte count H	0	0	0	0	0	BC10	BC9	BC8	00000000	R
E6AE	1	EP4FIFOBCL	Endpoint 4 slave FIFO total byte count L	BC7	BC6	BC5	BC4	BC3	BC2	BC1	BC0	00000000	R
E6AF	1	EP6FIFOBCH	Endpoint 6 slave FIFO total byte count H	0	0	0	0	BC11	BC10	BC9	BC8	00000000	R
E6B0	1	EP6FIFOBCL	Endpoint 6 slave FIFO total byte count L	BC7	BC6	BC5	BC4	BC3	BC2	BC1	BC0	00000000	R
E6B1	1	EP8FIFOBCH	Endpoint 8 slave FIFO total byte count H	0	0	0	0	0	BC10	BC9	BC8	00000000	R
E6B2	1	EP8FIFOBCL	Endpoint 8 slave FIFO total byte count L	BC7	BC6	BC5	BC4	BC3	BC2	BC1	BC0	00000000	R
E6B3	1	SUDPTRH	Setup Data Pointer high address byte	A15	A14	A13	A12	A11	A10	A9	A8	xxxxxxxx	RW
E6B4	1	SUDPTRL	Setup Data Pointer low address byte	A7	A6	A5	A4	A3	A2	A1	0	xxxxxxx0	bbbbbbbr
E6B5	1	SUDPTRCTL	Setup Data Pointer Auto Mode	0	0	0	0	0	0	0	SDPAUTO	00000001	RW
	2	reserved											
E6B8	8	SETUPDAT	8 bytes of setup data	D7	D6	D5	D4	D3	D2	D1	D0	xxxxxxxx	R
			SETUPDAT[0] = bmRequestType										
			SETUPDAT[1] = bmRequest										
			SETUPDAT[2:3] = wValue										
			SETUPDAT[4:5] = wIndex										
			SETUPDAT[6:7] = wLength										
		GPIF											
E6C0	1	GPIFWFSELECT	Waveform Selector	SINGLEWR1	SINGLEWR0	SINGLERD1	SINGLERD0	FIFOWR1	FIFOWR0	FIFORD1	FIFORD0	11100100	RW
E6C1	1	GPIFIDLECS	GPIF Done, GPIF IDLE drive mode	DONE	0	0	0	0	0	0	IDLEDRV	10000000	RW
E6C2	1	GPIFIDLECTL	Inactive Bus, CTL states	0	0	CTL5	CTL4	CTL3	CTL2	CTL1	CTL0	11111111	RW
E6C3	1	GPIFCTLCFG	CTL Drive Type	TRICTL	0	CTL5	CTL4	CTL3	CTL2	CTL1	CTL0	00000000	RW
E6C4	1	GPIFADRH[7]	GPIF Address H	0	0	0	0	0	0	0	GPIFA8	00000000	RW
E6C5	1	GPIFADRL[7]	GPIF Address L	GPIFA7	GPIFA6	GPIFA5	GPIFA4	GPIFA3	GPIFA2	GPIFA1	GPIFA0	00000000	RW
		FLOWSTATE											
E6C6	1	FLOWSTATE	Flowstate Enable and Selector	FSE	0	0	0	0	FS2	FS1	FS0	00000000	brrrrbbb
E6C7	1	FLOWLOGIC	Flowstate Logic	LFUNC1	LFUNC0	TERMA2	TERMA1	TERMA0	TERMB2	TERMB1	TERMB0	00000000	RW
E6C8	1	FLOWEQ0CTL	CTL-Pin States in Flowstate (when Logic = 0)	CTL0E3	CTL0E2	CTL0E1/ CTL5	CTL0E0/ CTL4	CTL3	CTL2	CTL1	CTL0	00000000	RW

Table 9. FX1 Register Summary (continued)

Hex	Size	Name	Description	b7	b6	b5	b4	b3	b2	b1	b0	Default	Access
E6C9	1	FLOWEQ1CTL	CTL-Pin States in Flow-state (when Logic = 1)	CTL0E3	CTL0E2	CTL0E1/ CTL5	CTL0E0/ CTL4	CTL3	CTL2	CTL1	CTL0	00000000	RW
E6CA	1	FLOWHOLDOFF	Holdoff Configuration	HOPERIOD3	HOPERIOD2	HOPERIOD1	HOPERIOD 0	HOSTATE	HOCTL2	HOCTL1	HOCTL0	00000000	RW
E6CB	1	FLOWSTB	Flowstate Strobe Configuration	SLAVE	RDYASYNC	CTLTOGL	SUSTAIN	0	MSTB2	MSTB1	MSTB0	00100000	RW
E6CC	1	FLOWSTBEDGE	Flowstate Rising/Falling Edge Configuration	0	0	0	0	0	0	FALLING	RISING	00000001	rrrrrrbb
E6CD	1	FLOWSTBPERIOD	Master-Strobe Half-Period	D7	D6	D5	D4	D3	D2	D1	D0	00000010	RW
E6CE	1	GPIFTCB3[7]	GPIF Transaction Count Byte 3	TC31	TC30	TC29	TC28	TC27	TC26	TC25	TC24	00000000	RW
E6CF	1	GPIFTCB2[7]	GPIF Transaction Count Byte 2	TC23	TC22	TC21	TC20	TC19	TC18	TC17	TC16	00000000	RW
E6D0	1	GPIFTCB1[7]	GPIF Transaction Count Byte 1	TC15	TC14	TC13	TC12	TC11	TC10	TC9	TC8	00000000	RW
E6D1	1	GPIFTCB0[7]	GPIF Transaction Count Byte 0	TC7	TC6	TC5	TC4	TC3	TC2	TC1	TC0	00000001	RW
	2	reserved										00000000	RW
		reserved											
		reserved											
E6D2	1	EP2GPIFFLGSEL[7]	Endpoint 2 GPIF Flag select	0	0	0	0	0	0	FS1	FS0	00000000	RW
E6D3	1	EP2GPIFPFSTOP	Endpoint 2 GPIF stop transaction on prog. flag	0	0	0	0	0	0	0	FIFO2FLAG	00000000	RW
E6D4	1	EP2GPIFTRIG[7]	Endpoint 2 GPIF Trigger	x	x	x	x	x	x	x	x	xxxxxxxx	W
	3	reserved											
		reserved											
		reserved											
E6DA	1	EP4GPIFFLGSEL[7]	Endpoint 4 GPIF Flag select	0	0	0	0	0	0	FS1	FS0	00000000	RW
E6DB	1	EP4GPIFPFSTOP	Endpoint 4 GPIF stop transaction on GPIF Flag	0	0	0	0	0	0	0	FIFO4FLAG	00000000	RW
E6DC	1	EP4GPIFTRIG[7]	Endpoint 4 GPIF Trigger	x	x	x	x	x	x	x	x	xxxxxxxx	W
	3	reserved											
		reserved											
		reserved											
E6E2	1	EP6GPIFFLGSEL[7]	Endpoint 6 GPIF Flag select	0	0	0	0	0	0	FS1	FS0	00000000	RW
E6E3	1	EP6GPIFPFSTOP	Endpoint 6 GPIF stop transaction on prog. flag	0	0	0	0	0	0	0	FIFO6FLAG	00000000	RW
E6E4	1	EP6GPIFTRIG[7]	Endpoint 6 GPIF Trigger	x	x	x	x	x	x	x	x	xxxxxxxx	W
	3	reserved											
		reserved											
		reserved											
E6EA	1	EP8GPIFFLGSEL[7]	Endpoint 8 GPIF Flag select	0	0	0	0	0	0	FS1	FS0	00000000	RW
E6EB	1	EP8GPIFPFSTOP	Endpoint 8 GPIF stop transaction on prog. flag	0	0	0	0	0	0	0	FIFO8FLAG	00000000	RW
E6EC	1	EP8GPIFTRIG[7]	Endpoint 8 GPIF Trigger	x	x	x	x	x	x	x	x	xxxxxxxx	W
	3	reserved											
E6F0	1	XGPIFSGLDATH	GPIF Data H (16-bit mode only)	D15	D14	D13	D12	D11	D10	D9	D8	xxxxxxxx	RW
E6F1	1	XGPIFSGLDATLX	Read/Write GPIF Data L & trigger transaction	D7	D6	D5	D4	D3	D2	D1	D0	xxxxxxxx	RW
E6F2	1	XGPIFSGLDATL-NOX	Read GPIF Data L, no transaction trigger	D7	D6	D5	D4	D3	D2	D1	D0	xxxxxxxx	R
E6F3	1	GPIFREADYCFG	Internal RDY, Sync/Async, RDY pin states	INTRDY	SAS	TCXRDY5	0	0	0	0	0	00000000	bbbrrrrr
E6F4	1	GPIFREADYSTAT	GPIF Ready Status	0	0	RDY5	RDY4	RDY3	RDY2	RDY1	RDY0	00xxxxxx	R
E6F5	1	GPIFABORT	Abort GPIF Waveforms	x	x	x	x	x	x	x	x	xxxxxxxx	W
E6F6	2	reserved											
		ENDPOINT BUFFERS											
E740	64	EP0BUF	EP0-IN/-OUT buffer	D7	D6	D5	D4	D3	D2	D1	D0	xxxxxxxx	RW
E780	64	EP10UTBUF	EP1-OUT buffer	D7	D6	D5	D4	D3	D2	D1	D0	xxxxxxxx	RW
E7C0	64	EP1INBUF	EP1-IN buffer	D7	D6	D5	D4	D3	D2	D1	D0	xxxxxxxx	RW
	2048	reserved											RW
F000	1023	EP2FIFOBUF	64/1023-byte EP 2 / slave FIFO buffer (IN or OUT)	D7	D6	D5	D4	D3	D2	D1	D0	xxxxxxxx	RW
F400	64	EP4FIFOBUF	64 byte EP 4 / slave FIFO buffer (IN or OUT)	D7	D6	D5	D4	D3	D2	D1	D0	xxxxxxxx	RW
F600	64	reserved											
F800	1023	EP6FIFOBUF	64/1023-byte EP 6 / slave FIFO buffer (IN or OUT)	D7	D6	D5	D4	D3	D2	D1	D0	xxxxxxxx	RW

Table 9. FX1 Register Summary (continued)

Hex	Size	Name	Description	b7	b6	b5	b4	b3	b2	b1	b0	Default	Access
FC00	64	EP8FIFOBUF	64 byte EP 8 / slave FIFO buffer (IN or OUT)	D7	D6	D5	D4	D3	D2	D1	D0	xxxxxxxx	RW
FE00	64	reserved											
xxxx		I²C Configuration Byte		0	DISCON	0	0	0	0	0	400KHZ	xxxxxxxx [[10]]	n/a
		Special Function Registers (SFRs)											
80	1	IOA[8]	Port A (bit addressable)	D7	D6	D5	D4	D3	D2	D1	D0	xxxxxxxx	RW
81	1	SP	Stack Pointer	D7	D6	D5	D4	D3	D2	D1	D0	00000111	RW
82	1	DPL0	Data Pointer 0 L	A7	A6	A5	A4	A3	A2	A1	A0	00000000	RW
83	1	DPH0	Data Pointer 0 H	A15	A14	A13	A12	A11	A10	A9	A8	00000000	RW
84	1	DPL1[8]	Data Pointer 1 L	A7	A6	A5	A4	A3	A2	A1	A0	00000000	RW
85	1	DPH1[8]	Data Pointer 1 H	A15	A14	A13	A12	A11	A10	A9	A8	00000000	RW
86	1	DPS[8]	Data Pointer 0/1 select	0	0	0	0	0	0	0	SEL	00000000	RW
87	1	PCON	Power Control	SMOD0	x	1	1	x	x	x	IDLE	00110000	RW
88	1	TCON	Timer/Counter Control (bit addressable)	TF1	TR1	TF0	TR0	IE1	IT1	IE0	IT0	00000000	RW
89	1	TMOD	Timer/Counter Mode Control	GATE	CT	M1	M0	GATE	CT	M1	M0	00000000	RW
8A	1	TL0	Timer 0 reload L	D7	D6	D5	D4	D3	D2	D1	D0	00000000	RW
8B	1	TL1	Timer 1 reload L	D7	D6	D5	D4	D3	D2	D1	D0	00000000	RW
8C	1	TH0	Timer 0 reload H	D15	D14	D13	D12	D11	D10	D9	D8	00000000	RW
8D	1	TH1	Timer 1 reload H	D15	D14	D13	D12	D11	D10	D9	D8	00000000	RW
8E	1	CKCON[8]	Clock Control	x	x	T2M	T1M	T0M	MD2	MD1	MD0	00000001	RW
8F	1	reserved											
90	1	IOB[8]	Port B (bit addressable)	D7	D6	D5	D4	D3	D2	D1	D0	xxxxxxxx	RW
91	1	EXIF[8]	External Interrupt Flag(s)	IE5	IE4	I²CINT	USBNT	1	0	0	0	00001000	RW
92	1	MPAGE[8]	Upper Addr Byte of MOVX using @R0 / @R1	A15	A14	A13	A12	A11	A10	A9	A8	00000000	RW
93	5	reserved											
98	1	SCON0	Serial Port 0 Control (bit addressable)	SM0_0	SM1_0	SM2_0	REN_0	TB8_0	RB8_0	TI_0	RI_0	00000000	RW
99	1	SBUF0	Serial Port 0 Data Buffer	D7	D6	D5	D4	D3	D2	D1	D0	00000000	RW
9A	1	AUTOPTRH1[8]	Autopointer 1 Address H	A15	A14	A13	A12	A11	A10	A9	A8	00000000	RW
9B	1	AUTOPTRL1[8]	Autopointer 1 Address L	A7	A6	A5	A4	A3	A2	A1	A0	00000000	RW
9C	1	reserved											
9D	1	AUTOPTRH2[8]	Autopointer 2 Address H	A15	A14	A13	A12	A11	A10	A9	A8	00000000	RW
9E	1	AUTOPTRL2[8]	Autopointer 2 Address L	A7	A6	A5	A4	A3	A2	A1	A0	00000000	RW
9F	1	reserved											
A0	1	IOC[8]	Port C (bit addressable)	D7	D6	D5	D4	D3	D2	D1	D0	xxxxxxxx	RW
A1	1	INT2CLR[8]	Interrupt 2 clear	x	x	x	x	x	x	x	x	xxxxxxxx	W
A2	1	INT4CLR[8]	Interrupt 4 clear	x	x	x	x	x	x	x	x	xxxxxxxx	W
A3	5	reserved											
A8	1	IE	Interrupt Enable (bit addressable)	EA	ES1	ET2	ES0	ET1	EX1	ET0	EX0	00000000	RW
A9	1	reserved											
AA	1	EP2468STAT[8]	Endpoint 2,4,6,8 status flags	EP8F	EP8E	EP6F	EP6E	EP4F	EP4E	EP2F	EP2E	01011010	R
AB	1	EP24FIFOFLGS [8]	Endpoint 2,4 slave FIFO status flags	0	EP4PF	EP4EF	EP4FF	0	EP2PF	EP2EF	EP2FF	00100010	R
AC	1	EP68FIFOFLGS [8]	Endpoint 6,8 slave FIFO status flags	0	EP8PF	EP8EF	EP8FF	0	EP6PF	EP6EF	EP6FF	01100110	R
AD	2	reserved											
AF	1	AUTOPTRSETUP[8]	Autopointer 1&2 setup	0	0	0	0	0	APTR2INC	APTR1INC	APTREN	00000110	RW
B0	1	IOD[8]	Port D (bit addressable)	D7	D6	D5	D4	D3	D2	D1	D0	xxxxxxxx	RW
B1	1	IOE[8]	Port E (NOT bit addressable)	D7	D6	D5	D4	D3	D2	D1	D0	xxxxxxxx	RW
B2	1	OEA[8]	Port A Output Enable	D7	D6	D5	D4	D3	D2	D1	D0	00000000	RW
B3	1	OEB[8]	Port B Output Enable	D7	D6	D5	D4	D3	D2	D1	D0	00000000	RW
B4	1	OEC[8]	Port C Output Enable	D7	D6	D5	D4	D3	D2	D1	D0	00000000	RW
B5	1	OED[8]	Port D Output Enable	D7	D6	D5	D4	D3	D2	D1	D0	00000000	RW
B6	1	OEE[8]	Port E Output Enable	D7	D6	D5	D4	D3	D2	D1	D0	00000000	RW
B7	1	reserved											
B8	1	IP	Interrupt Priority (bit addressable)	1	PS1	PT2	PS0	PT1	PX1	PT0	PX0	10000000	RW
B9	1	reserved											
BA	1	EP01STAT[8]	Endpoint 0&1 Status	0	0	0	0	0	EP1INBSY	EP1OUTBSY	EP0BSY	00000000	R
BB	1	GPIFTRIG[8] [7]	Endpoint 2,4,6,8 GPIF slave FIFO Trigger	DONE	0	0	0	0	RW	EP1	EP0	10000xxx	brrrrbbb
BC	1	reserved											
BD	1	GPIFSGLDATH[8]	GPIF Data H (16-bit mode only)	D15	D14	D13	D12	D11	D10	D9	D8	xxxxxxxx	RW

Table 9. FX1 Register Summary (continued)

Hex	Size	Name	Description	b7	b6	b5	b4	b3	b2	b1	b0	Default	Access
BE	1	GPIFSGLDATLX[8]	GPIF Data L w/ Trigger	D7	D6	D5	D4	D3	D2	D1	D0	xxxxxxxx	RW
BF	1	GPIFSGLDAT LNOX[8]	GPIF Data L w/ No Trigger	D7	D6	D5	D4	D3	D2	D1	D0	xxxxxxxx	R
C0	1	SCON1[8]	Serial Port 1 Control (bit addressable)	SM0_1	SM1_1	SM2_1	REN_1	TB8_1	RB8_1	TI_1	RI_1	00000000	RW
C1	1	SBUF1[8]	Serial Port 1 Data Buffer	D7	D6	D5	D4	D3	D2	D1	D0	00000000	RW
C2	6	reserved											
C8	1	T2CON	Timer/Counter 2 Control (bit addressable)	TF2	EXF2	RCLK	TCLK	EXEN2	TR2	CT2	CPRL2	00000000	RW
C9	1	reserved											
CA	1	RCAP2L	Capture for Timer 2, auto-reload, up-counter	D7	D6	D5	D4	D3	D2	D1	D0	00000000	RW
CB	1	RCAP2H	Capture for Timer 2, auto-reload, up-counter	D7	D6	D5	D4	D3	D2	D1	D0	00000000	RW
CC	1	TL2	Timer 2 reload L	D7	D6	D5	D4	D3	D2	D1	D0	00000000	RW
CD	1	TH2	Timer 2 reload H	D15	D14	D13	D12	D11	D10	D9	D8	00000000	RW
CE	2	reserved											
D0	1	PSW	Program Status Word (bit addressable)	CY	AC	F0	RS1	RS0	OV	F1	P	00000000	RW
D1	7	reserved											
D8	1	EICON[8]	External Interrupt Control	SMOD1	1	ERESI	RESI	INT6	0	0	0	01000000	RW
D9	7	reserved											
E0	1	ACC	Accumulator (bit addressable)	D7	D6	D5	D4	D3	D2	D1	D0	00000000	RW
E1	7	reserved											
E8	1	EIE[8]	External Interrupt Enable(s)	1	1	1	EX6	EX5	EX4	EI²C	EUSB	11100000	RW
E9	7	reserved											
F0	1	B	B (bit addressable)	D7	D6	D5	D4	D3	D2	D1	D0	00000000	RW
F1	7	reserved											
F8	1	EIP[8]	External Interrupt Priority Control	1	1	1	PX6	PX5	PX4	PI²C	PUSB	11100000	RW
F9	7	reserved											

Legend (For the Access column)
R = all bits read-only
W = all bits write-only
r = read-only bit
w = write-only bit
b = both read/write bit

Note
10. If no EEPROM is detected by the SIE then the default is 00000000.

[+] Feedback

Absolute Maximum Ratings

Exceeding maximum ratings may shorten the useful life of the device. User guidelines are not tested.

Storage Temperature ..... –65°C to +150°C

Ambient Temperature with Power Supplied..... 0°C to +70°C

Supply Voltage to Ground Potential.....–0.5V to +4.0V

DC Input Voltage to Any Input Pin ..... 5.25V[11]

DC Voltage Applied to Outputs in High Z State ..... –0.5V to VCC + 0.5V

Power Dissipation ..... 235 mW

Static Discharge Voltage..... > 2000V

Max Output Current, per I/O port..... 10 mA

Max Output Current, all five I/O ports (128 and 100 pin packages)..... 50 mA

Operating Conditions

T_A (Ambient Temperature Under Bias) ..... 0°C to +70°C

Supply Voltage.....+3.15V to +3.45V

Ground Voltage..... 0V

F_{OSC} (Oscillator or Crystal Frequency).... 24 MHz ± 100 ppm Parallel Resonant

DC Characteristics

Table 10. DC Characteristics

Parameter	Description	Conditions	Min	Typ	Max	Unit
VCC	Supply Voltage		3.15	3.3	3.45	V
VCC Ramp Up	0 to 3.3V		200			µs
V_{IH}	Input HIGH Voltage		2		5.25	V
V_{IL}	Input LOW Voltage		–0.5		0.8	V
V_{IH_X}	Crystal input HIGH Voltage		2		5.25	V
V_{IL_X}	Crystal input LOW Voltage		–0.05		0.8	V
I_I	Input Leakage Current	0< V_{IN} < VCC			±10	µA
V_{OH}	Output Voltage HIGH	I_{OUT} = 4 mA	2.4			V
V_{OL}	Output LOW Voltage	I_{OUT} = –4 mA			0.4	V
I_{OH}	Output Current HIGH				4	mA
I_{OL}	Output Current LOW				4	mA
C_{IN}	Input Pin Capacitance	Except D+/D–		3.29	10	pF
		D+/D–		12.96	15	pF
I_{SUSP}	Suspend Current	Connected		.5	1.2	mA
		Disconnected		.3	1.0	mA
I_{CC}	Supply Current	8051 running, connected to USB		35	65	mA
T_{RESET}	Reset Time after Valid Power	VCC min = 3.0V	5.0			ms
	Pin Reset after powered on		200			µs

USB Transceiver

USB 2.0 compliant in full speed mode.

Notes
11. It is recommended to not power I/O when chip power is off.

AC Electrical Characteristics

USB Transceiver

USB 2.0 compliant in full speed mode.

Figure 12. Program Memory Read Timing Diagram

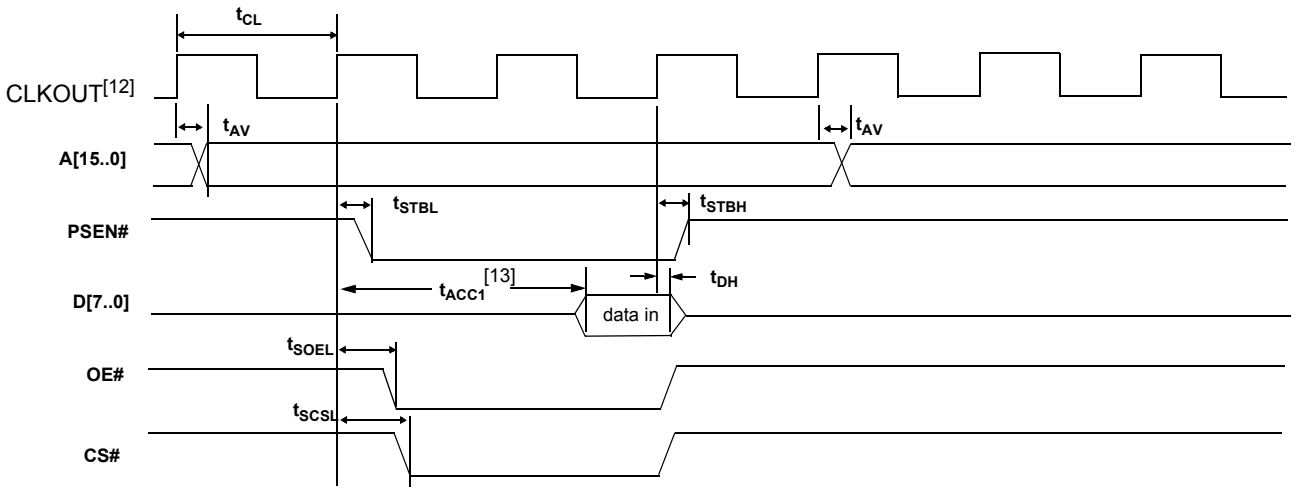

Table 11. Program Memory Read Parameters

Parameter	Description	Min	Typ	Max	Unit	Notes
t_{CL}	1/CLKOUT Frequency		20.83		ns	48 MHz
			41.66		ns	24 MHz
			83.2		ns	12 MHz
t_{AV}	Delay from Clock to Valid Address	0		10.7	ns	
t_{STBL}	Clock to PSEN Low	0		8	ns	
t_{STBH}	Clock to PSEN High	0		8	ns	
t_{SOEL}	Clock to OE Low			11.1	ns	
t_{SCSL}	Clock to CS Low			13	ns	
t_{DSU}	Data Setup to Clock	9.6			ns	
t_{DH}	Data Hold Time	0			ns	

Notes

12. CLKOUT is shown with positive polarity.
13. t_{ACC1} is computed from the parameters in Table 11 as follows:
    t_{ACC1}(24 MHz) = 3*t_{CL} – t_{AV} – t_{DSU} = 106 ns
    t_{ACC1}(48 MHz) = 3*t_{CL} – t_{AV} – t_{DSU} = 43 ns.

Figure 13. Data Memory Read Timing Diagram

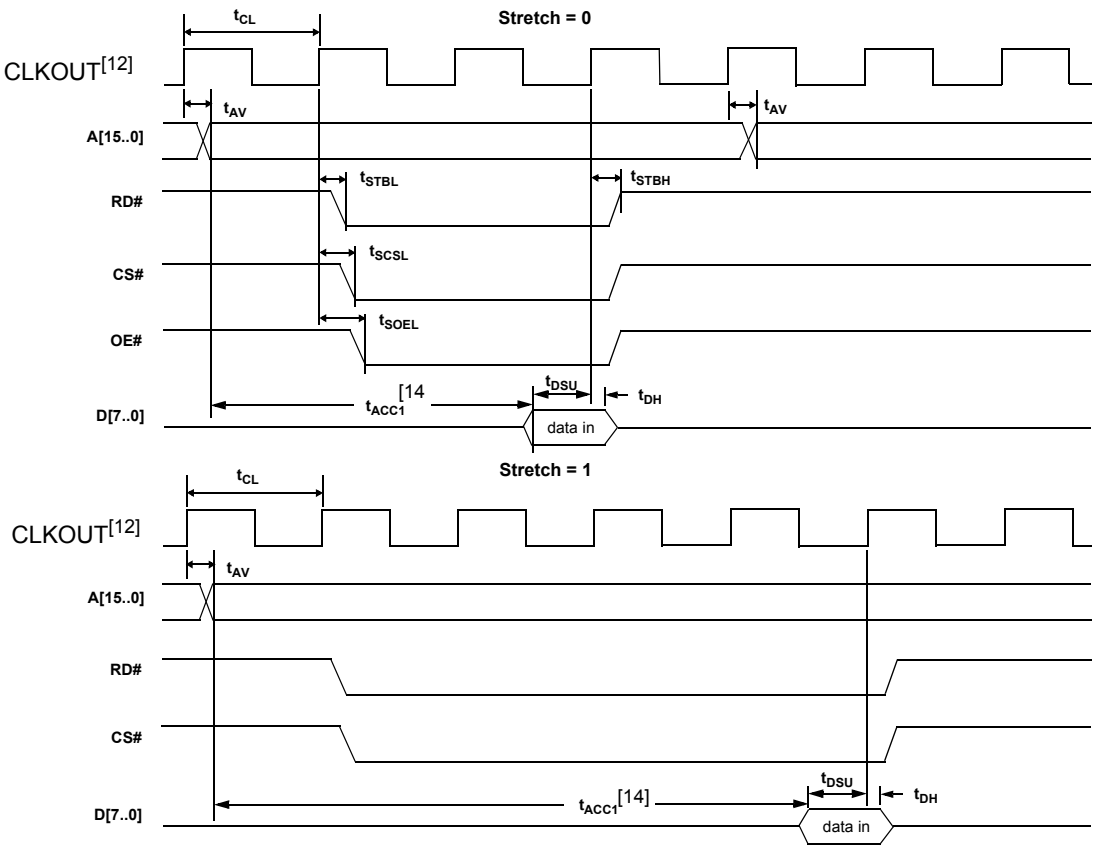

Table 12. Data Memory Read Parameters

Parameter	Description	Min	Typ	Max	Unit	Notes
t_{CL}	1/CLKOUT Frequency		20.83		ns	48 MHz
			41.66		ns	24 MHz
			83.2		ns	12 MHz
t_{AV}	Delay from Clock to Valid Address			10.7	ns	
t_{STBL}	Clock to RD LOW			11	ns	
t_{STBH}	Clock to RD HIGH			11	ns	
t_{SCSL}	Clock to CS LOW			13	ns	
t_{SOEL}	Clock to OE LOW			11.1	ns	
t_{DSU}	Data Setup to Clock	9.6			ns	
t_{DH}	Data Hold Time	0			ns	

When using the AUTPOPTR1 or AUTOPTR2 to address external memory, the address of AUTOPTR1 is active only when either RD# or WR# are active. The address of AUTOPTR2 is active throughout the cycle and meets the above address valid time for which is based on the stretch value.

Note

14. t_{ACC2} and t_{ACC3} are computed from the parameters in Table 12 as follows:
t_{ACC2}(24 MHz) = 3*t_{CL} – t_{AV} – t_{DSU} = 106 ns
t_{ACC2}(48 MHz) = 3*t_{CL} – t_{AV} – t_{DSU} = 43 ns

t_{ACC3}(24 MHz) = 5*t_{CL} – t_{AV} – t_{DSU} = 190 ns
t_{ACC3}(48 MHz) = 5*t_{CL} – t_{AV} – t_{DSU} = 86 ns.

[+] Feedback

Figure 14. Data Memory Write Timing Diagram

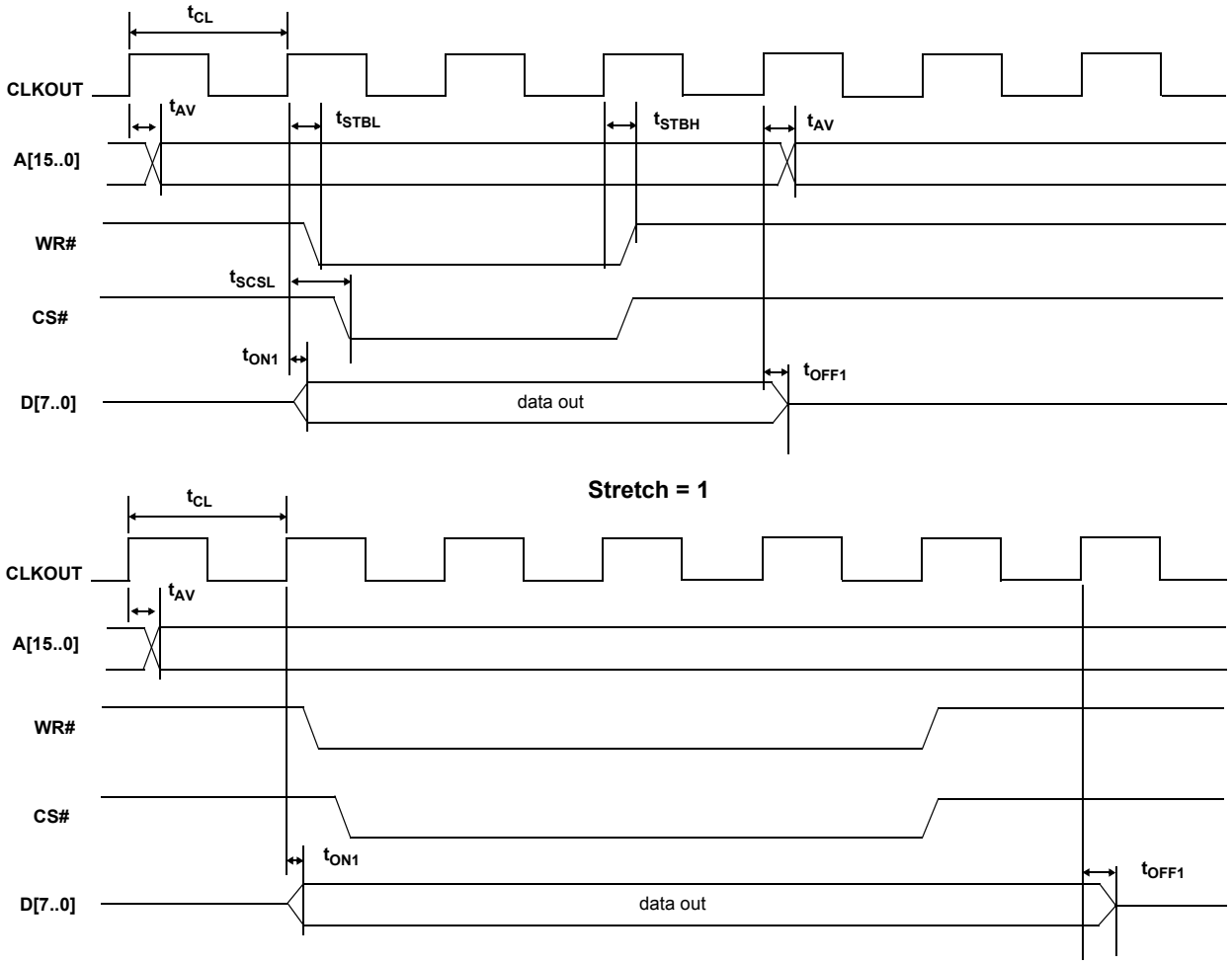

Table 13. Data Memory Write Parameters

Parameter	Description	Min	Max	Unit	Notes
t_{AV}	Delay from Clock to Valid Address	0	10.7	ns	
t_{STBL}	Clock to WR Pulse LOW	0	11.2	ns	
t_{STBH}	Clock to WR Pulse HIGH	0	11.2	ns	
t_{SCSL}	Clock to CS Pulse LOW		13.0	ns	
t_{ON1}	Clock to Data Turn-on	0	13.1	ns	
t_{OFF1}	Clock to Data Hold Time	0	13.1	ns	

When using the AUTPOPTR1 or AUTOPTR2 to address external memory, the address of AUTOPTR1 is active only when either RD# or WR# are active. The address of AUTOPTR2 is active throughout the cycle and meets the above address valid time for which is based on the stretch value.

PORTC Strobe Feature Timings

The RD# and WR# are present in the 100 pin version and the 128 pin package. In these 100 pin and 128 pin versions, an 8051 control bit is set to pulse the RD# and WR# pins when the 8051 reads from or writes to the PORTC. This feature is enabled by setting the PORTCSTB bit in CPUCS register.

The RD# and WR# strobes are asserted for two CLKOUT cycles when the PORTC is accessed.

The WR# strobe is asserted two clock cycles after the PORTC is updated and is active for two clock cycles after that as shown in Figure 16.

As for read, the value of the PORTC three clock cycles before the assertion of RD# is the value that the 8051 reads in. The RD# is pulsed for 2 clock cycles after 3 clock cycles from the point when the 8051 has performed a read function on PORTC.

In this feature the RD# signal prompts the external logic to prepare the next data byte. Nothing gets sampled internally on assertion of the RD# signal itself. It is just a “prefetch” type signal to get the next data byte prepared. Therefore, using it meets the set up time to the next read.

The purpose of this pulsing of RD# is to let the external peripheral know that the 8051 is done reading PORTC and that the data was latched into the PORTC three CLKOUT cycles prior to asserting the RD# signal. After the RD# is pulsed the external logic may update the data on PORTC.

The timing diagram of the read and write strobing function on accessing PORTC follows. Refer to Figure 13 on page 33 and Figure 14 on page 34 for details on propagation delay of RD# and WR# signals.

Figure 16. WR# Strobe Function when PORTC is Accessed by 8051

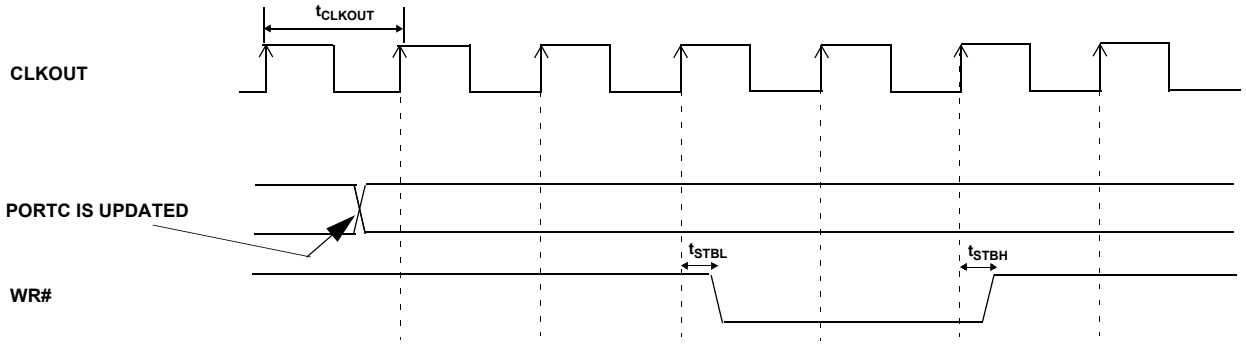

Figure 17. RD# Strobe Function when PORTC is Accessed by 8051

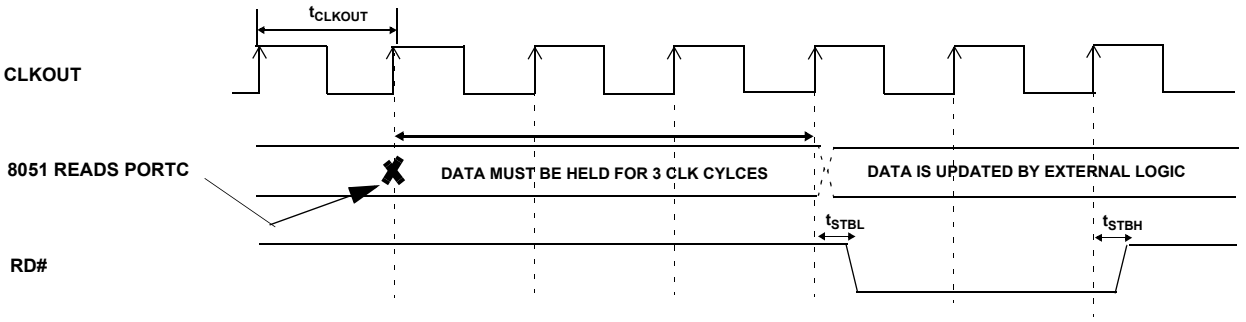

[+] Feedback

GPIF Synchronous Signals

In the following figure, dashed lines indicate signals with programmable polarity.

Figure 18. GPIF Synchronous Signals Timing Diagram

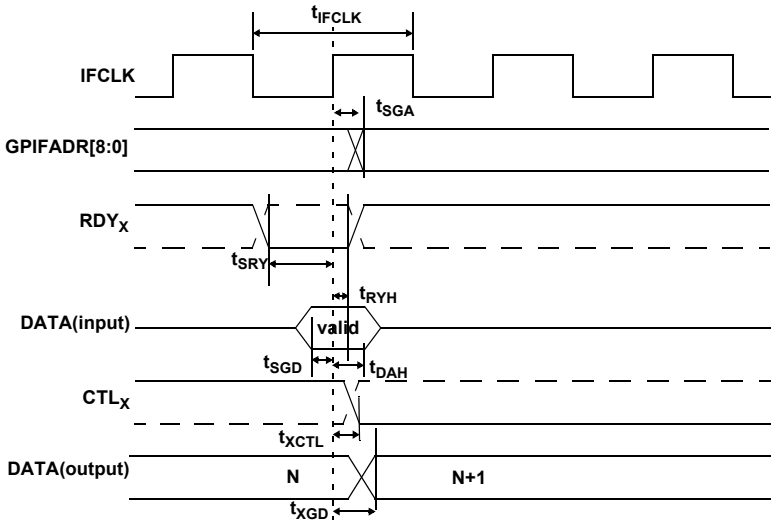

The following table provides the GPIF Synchronous Signals Parameters with Internally Sourced IFCLK. [15, 16]

Table 14. GPIF Synchronous Signals Parameters with Internally Sourced IFCLK

Parameter	Description	Min	Max	Unit
t_{IFCLK}	IFCLK Period	20.83		ns
t_{SRY}	RDY_X to Clock Setup Time	8.9		ns
t_{RYH}	Clock to RDY_X	0		ns
t_{SGD}	GPIF Data to Clock Setup Time	9.2		ns
t_{DAH}	GPIF Data Hold Time	0		ns
t_{SGA}	Clock to GPIF Address Propagation Delay		7.5	ns
t_{XGD}	Clock to GPIF Data Output Propagation Delay		11	ns
t_{XCTL}	Clock to CTL_X Output Propagation Delay		6.7	ns

The following table provides the GPIF Synchronous Signals Parameters with Externally Sourced IFCLK.[16]

Table 15. GPIF Synchronous Signals Parameters with Externally Sourced IFCLK

Parameter	Description	Min	Max	Unit
t_{IFCLK}	IFCLK Period	20.83	200	ns
t_{SRY}	RDY_X to Clock Setup Time	2.9		ns
t_{RYH}	Clock to RDY_X	3.7		ns
t_{SGD}	GPIF Data to Clock Setup Time	3.2		ns
t_{DAH}	GPIF Data Hold Time	4.5		ns
t_{SGA}	Clock to GPIF Address Propagation Delay		11.5	ns
t_{XGD}	Clock to GPIF Data Output Propagation Delay		15	ns
t_{XCTL}	Clock to CTL_X Output Propagation Delay		10.7	ns

Notes
15. GPIF asynchronous RDY_X signals have a minimum Setup time of 50 ns when using internal 48-MHz IFCLK.
16. IFCLK must not exceed 48 MHz.

[+] Feedback

Slave FIFO Synchronous Read

In the following figure, dashed lines indicate signals with programmable polarity.

Figure 19. Slave FIFO Synchronous Read Timing Diagram

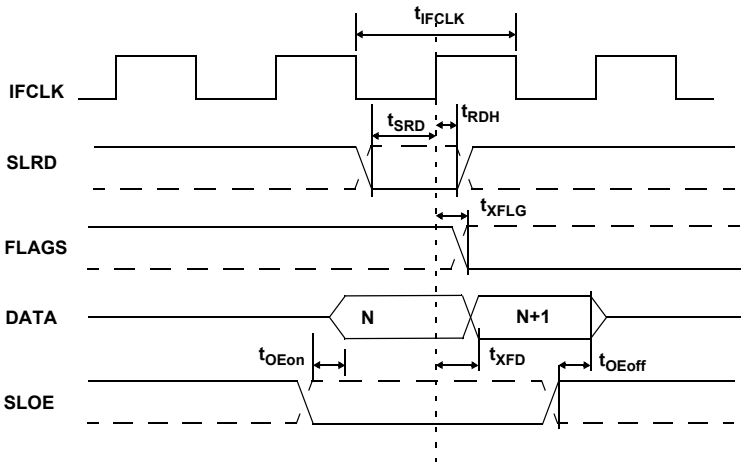

The following table provides the Slave FIFO Synchronous Read Parameters with Internally Sourced IFCLK. [16]

Table 16. Slave FIFO Synchronous Read Parameters with Internally Sourced IFCLK

Parameter	Description	Min	Max	Unit
t_{IFCLK}	IFCLK Period	20.83		ns
t_{SRD}	SLRD to Clock Setup Time	18.7		ns
t_{RDH}	Clock to SLRD Hold Time	0		ns
t_{OEon}	SLOE Turn on to FIFO Data Valid		10.5	ns
t_{OEoff}	SLOE Turn off to FIFO Data Hold		10.5	ns
t_{XFLG}	Clock to FLAGS Output Propagation Delay		9.5	ns
t_{XFD}	Clock to FIFO Data Output Propagation Delay		11	ns

The following table provides the Slave FIFO Synchronous Read Parameters with Externally Sourced IFCLK.[16]

Table 17. Slave FIFO Synchronous Read Parameters with Externally Sourced IFCLK

Parameter	Description	Min	Max	Unit
t_{IFCLK}	IFCLK Period	20.83	200	ns
t_{SRD}	SLRD to Clock Setup Time	12.7		ns
t_{RDH}	Clock to SLRD Hold Time	3.7		ns
t_{OEon}	SLOE Turn on to FIFO Data Valid		10.5	ns
t_{OEoff}	SLOE Turn off to FIFO Data Hold		10.5	ns
t_{XFLG}	Clock to FLAGS Output Propagation Delay		13.5	ns
t_{XFD}	Clock to FIFO Data Output Propagation Delay		15	ns

[+] Feedback

Slave FIFO Asynchronous Read

In the following figure, dashed lines indicate signals with programmable polarity.

Figure 20. Slave FIFO Asynchronous Read Timing Diagram

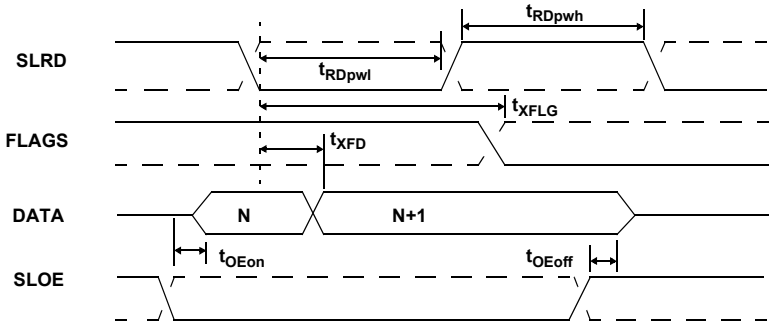

In the following table, the Slave FIFO asynchronous parameter values use internal IFCLK setting at 48 MHz.

Table 18. Slave FIFO Asynchronous Read Parameters

Parameter	Description	Min	Max	Unit
t_{RDpwl}	SLRD Pulse Width LOW	50		ns
t_{RDpwh}	SLRD Pulse Width HIGH	50		ns
t_{XFLG}	SLRD to FLAGS Output Propagation Delay		70	ns
t_{XFD}	SLRD to FIFO Data Output Propagation Delay		15	ns
t_{OEon}	SLOE Turn-on to FIFO Data Valid		10.5	ns
t_{OEoff}	SLOE Turn-off to FIFO Data Hold		10.5	ns

[+] Feedback

Slave FIFO Synchronous Write

In the following figure, dashed lines indicate signals with programmable polarity.

Figure 21. Slave FIFO Synchronous Write Timing Diagram

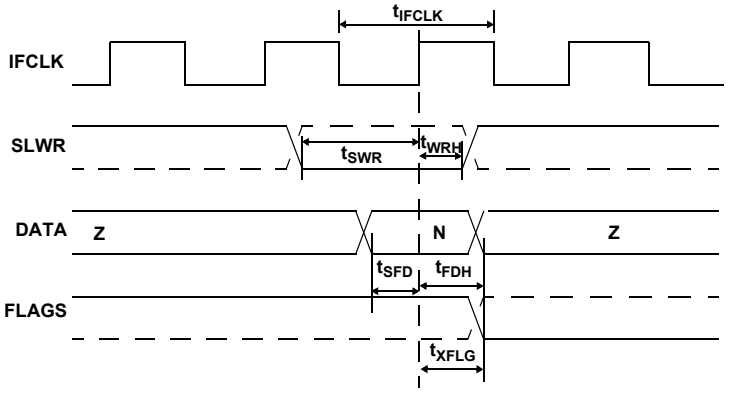

The following table provides the Slave FIFO Synchronous Write Parameters with Internally Sourced IFCLK. [16]

Table 19. Slave FIFO Synchronous Write Parameters with Internally Sourced IFCLK

Parameter	Description	Min	Max	Unit
t_{IFCLK}	IFCLK Period	20.83		ns
t_{SWR}	SLWR to Clock Setup Time	18.1		ns
t_{WRH}	Clock to SLWR Hold Time	0		ns
t_{SFD}	FIFO Data to Clock Setup Time	9.2		ns
t_{FDH}	Clock to FIFO Data Hold Time	0		ns
t_{XFLG}	Clock to FLAGS Output Propagation Time		9.5	ns

The following table provides the Slave FIFO Synchronous Write Parameters with Externally Sourced IFCLK. [16]

Table 20. Slave FIFO Synchronous Write Parameters with Externally Sourced IFCLK [16]

Parameter	Description	Min	Max	Unit
t_{IFCLK}	IFCLK Period	20.83	200	ns
t_{SWR}	SLWR to Clock Setup Time	12.1		ns
t_{WRH}	Clock to SLWR Hold Time	3.6		ns
t_{SFD}	FIFO Data to Clock Setup Time	3.2		ns
t_{FDH}	Clock to FIFO Data Hold Time	4.5		ns
t_{XFLG}	Clock to FLAGS Output Propagation Time		13.5	ns

Slave FIFO Asynchronous Write

In the following figure, dashed lines indicate signals with programmable polarity.

Figure 22. Slave FIFO Asynchronous Write Timing Diagram

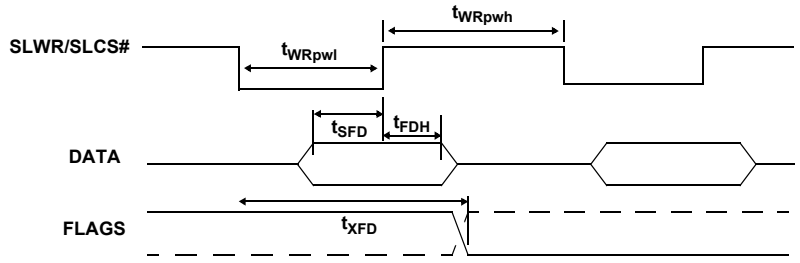

In the following table, the Slave FIFO asynchronous parameter values use internal IFCLK setting at 48 MHz.

Table 21. Slave FIFO Asynchronous Write Parameters with Internally Sourced IFCLK

Parameter	Description	Min	Max	Unit
t_{WRpwl}	SLWR Pulse LOW	50		ns
t_{WRpwh}	SLWR Pulse HIGH	70		ns
t_{SFD}	SLWR to FIFO DATA Setup Time	10		ns
t_{FDH}	FIFO DATA to SLWR Hold Time	10		ns
t_{XFD}	SLWR to FLAGS Output Propagation Delay		70	ns

Slave FIFO Synchronous Packet End Strobe

In the following figure, dashed lines indicate signals with programmable polarity.

Figure 23. Slave FIFO Synchronous Packet End Strobe Timing Diagram

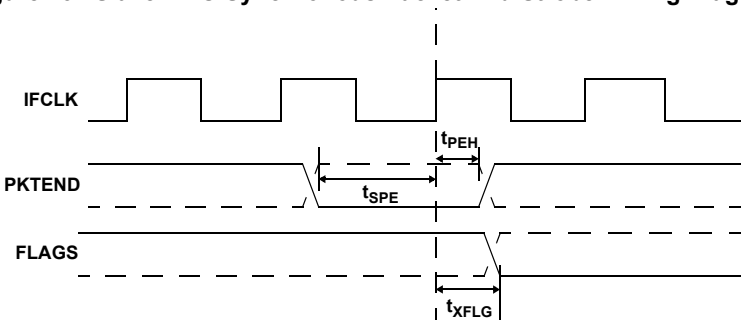

The following table provides the Slave FIFO Synchronous Packet End Strobe Parameters with Internally Sourced IFCLK. [16]

Table 22. Slave FIFO Synchronous Packet End Strobe Parameters with Internally Sourced IFCLK

Parameter	Description	Min	Max	Unit
t_{IFCLK}	IFCLK Period	20.83		ns
t_{SPE}	PKTEND to Clock Setup Time	14.6		ns
t_{PEH}	Clock to PKTEND Hold Time	0		ns
t_{XFLG}	Clock to FLAGS Output Propagation Delay		9.5	ns

[+] Feedback

The following table provides the Slave FIFO Synchronous Packet End Strobe Parameters with Externally Sourced IFCLK. [16]

Table 23. Slave FIFO Synchronous Packet End Strobe Parameters with Externally Sourced IFCLK

Parameter	Description	Min	Max	Unit
t_{IFCLK}	IFCLK Period	20.83	200	ns
t_{SPE}	PKTEND to Clock Setup Time	8.6		ns
t_{PEH}	Clock to PKTEND Hold Time	2.5		ns
t_{XFLG}	Clock to FLAGS Output Propagation Delay		13.5	ns

There is no specific timing requirement that needs to be met for asserting the PKTEND pin concerning asserting SLWR. PKTEND is asserted with the last data value clocked into the FIFOs or thereafter. The only consideration is that the set up time t_{SPE} and the hold time t_{PEH} for PKTEND must be met.

Although there are no specific timing requirements for asserting PKTEND in relation to SLWR, there exists a specific case condition that needs attention. When using the PKTEND to commit a one byte or word packet, an additional timing requirement must be met when the FIFO is configured to operate in auto mode and it is necessary to send two packets back to back:

- A full packet (defined as the number of bytes in the FIFO meeting the level set in the AUTOINLEN register) committed automatically followed by
- A short one byte or word packet committed manually using the PKTEND pin.

In this particular scenario, the developer must assert the PKTEND at least one clock cycle after the rising edge that caused the last byte or word to be clocked into the previous auto committed packet. Figure 24 shows this scenario. X is the value the AUTOINLEN register is set to when the IN endpoint is configured to be in auto mode.

Figure 24 shows a scenario where two packets are being committed. The first packet is committed automatically when the number of bytes in the FIFO reaches X (value set in AUTOINLEN register) and the second one byte or word short packet being committed manually using PKTEND. Note that there is at least one IFCLK cycle timing between asserting PKTEND and clocking of the last byte of the previous packet (causing the packet to be committed automatically). Failing to adhere to this timing results in the FX2 failing to send the one byte or word short packet.

Figure 24. Slave FIFO Synchronous Write Sequence and Timing Diagram

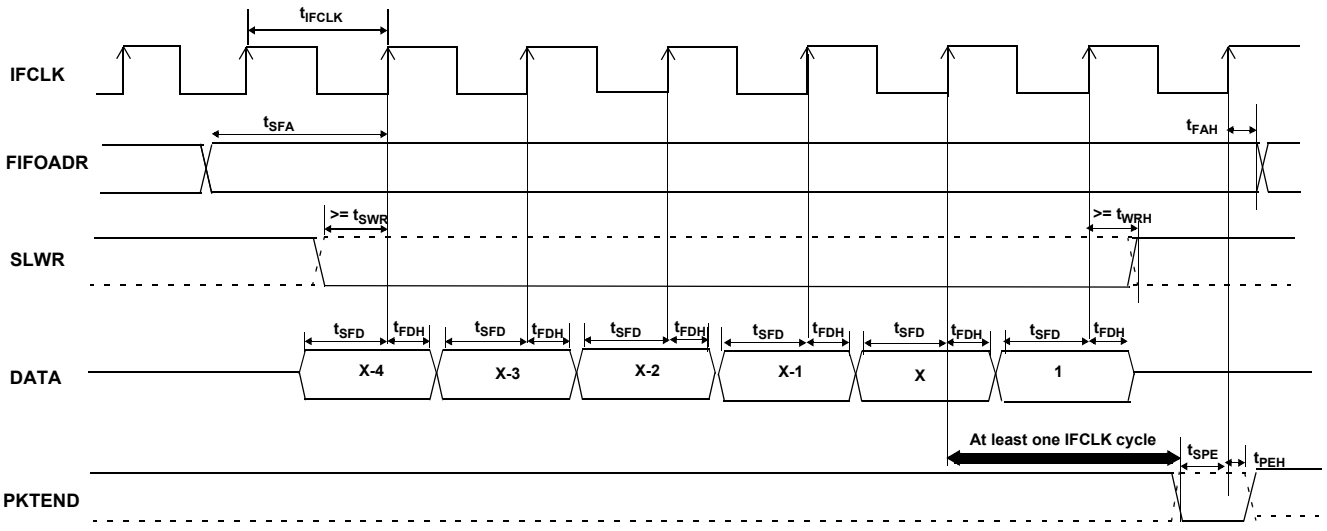

[+] Feedback

Slave FIFO Asynchronous Packet End Strobe

In the following figure, dashed lines indicate signals with programmable polarity.

Figure 25. Slave FIFO Asynchronous Packet End Strobe Timing Diagram

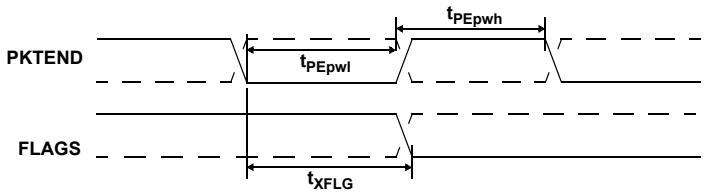

In the following table, the Slave FIFO asynchronous parameter values use internal IFCLK setting at 48 MHz.

Table 24. Slave FIFO Asynchronous Packet End Strobe Parameters

Parameter	Description	Min	Max	Unit
t_{PEpwl}	PKTEND Pulse Width LOW	50		ns
t_{PWpwh}	PKTEND Pulse Width HIGH	50		ns
t_{XFLG}	PKTEND to FLAGS Output Propagation Delay		115	ns

Slave FIFO Output Enable

In the following figure, dashed lines indicate signals with programmable polarity.

Figure 26. Slave FIFO Output Enable Timing Diagram

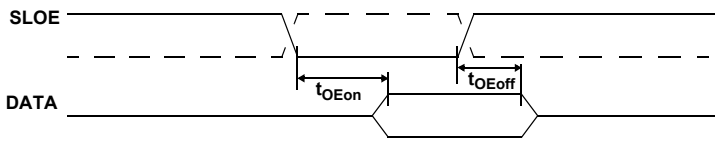

Table 25. Slave FIFO Output Enable Parameters

Parameter	Description	Max	Unit
t_{OEon}	SLOE Assert to FIFO DATA Output	10.5	ns
t_{OEoff}	SLOE Deassert to FIFO DATA Hold	10.5	ns

Slave FIFO Address to Flags/Data

In the following figure, dashed lines indicate signals with programmable polarity.

Figure 27. Slave FIFO Address to Flags/Data Timing Diagram

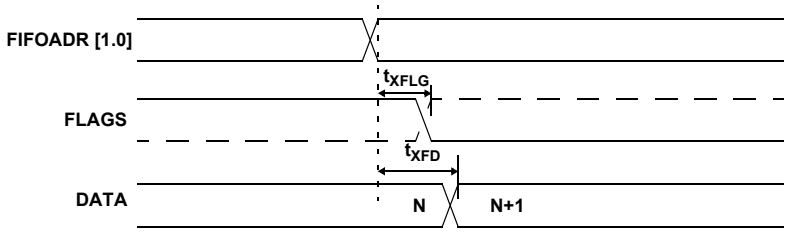

Table 26. Slave FIFO Address to Flags/Data Parameters

Parameter	Description	Max	Unit
t_{XFLG}	FIFOADR[1:0] to FLAGS Output Propagation Delay	10.7	ns
t_{XFD}	FIFOADR[1:0] to FIFODATA Output Propagation Delay	14.3	ns

Slave FIFO Synchronous Address

Figure 28. Slave FIFO Synchronous Address Timing Diagram

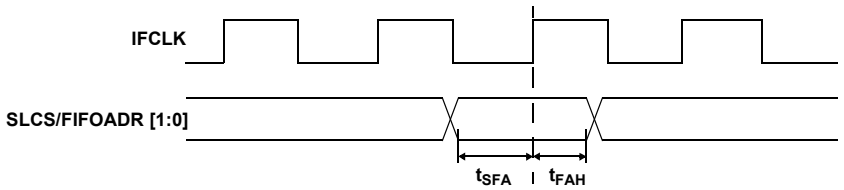

The following table provides the Slave FIFO Synchronous Address Parameters.[16]

Table 27. Slave FIFO Synchronous Address Parameters

Parameter	Description	Min	Max	Unit
t_{IFCLK}	Interface Clock Period	20.83	200	ns
t_{SFA}	FIFOADR[1:0] to Clock Setup Time	25		ns
t_{FAH}	Clock to FIFOADR[1:0] Hold Time	10		ns

Slave FIFO Asynchronous Address

In the following figure, dashed lines indicate signals with programmable polarity.

Figure 29. Slave FIFO Asynchronous Address Timing Diagram

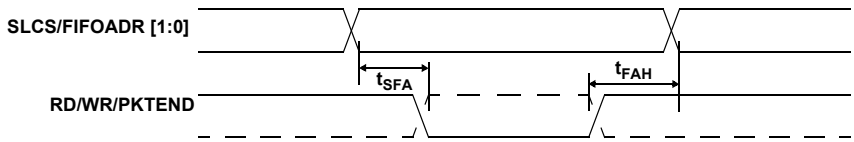

In the following table, the Slave FIFO asynchronous parameter values use internal IFCLK setting at 48 MHz.

Table 28. Slave FIFO Asynchronous Address Parameters

Parameter	Description	Min	Unit
t_{SFA}	FIFOADR[1:0] to RD/WR/PKTEND Setup Time	10	ns
t_{FAH}	RD/WR/PKTEND to FIFOADR[1:0] Hold Time	10	ns

Sequence Diagram

Single and Burst Synchronous Read Example

Figure 30. Slave FIFO Synchronous Read Sequence and Timing Diagram

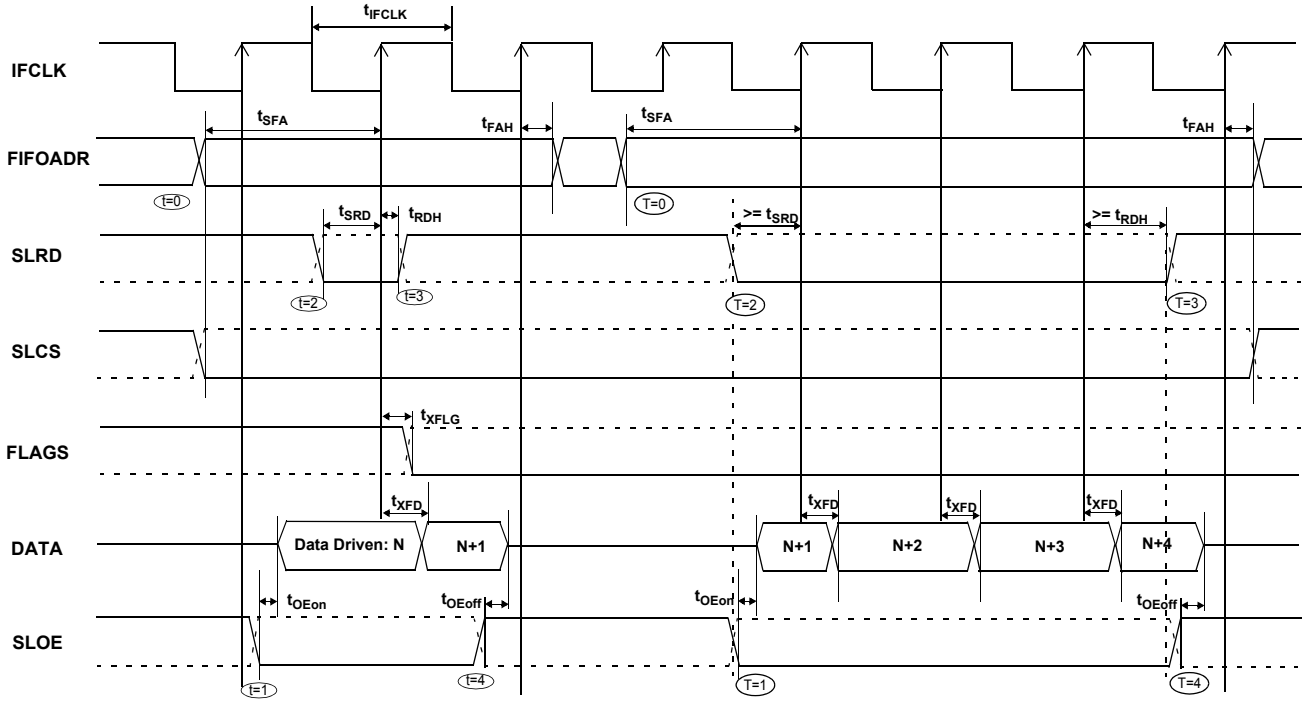

Figure 31. Slave FIFO Synchronous Sequence of Events Diagram

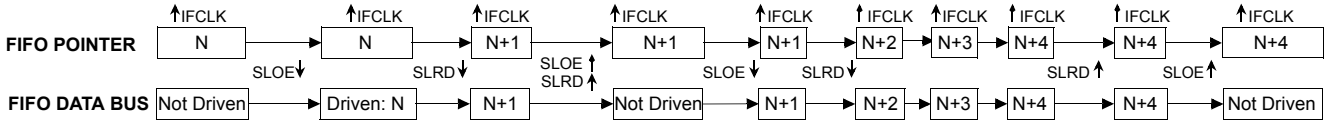

Figure 30 shows the timing relationship of the SLAVE FIFO signals during a synchronous FIFO read using IFCLK as the synchronizing clock. This diagram illustrates a single read followed by a burst read.

- At t = 0 the FIFO address is stable and the signal SLCS is asserted (SLCS may be tied low in some applications).

  Note t_{SFA} has a minimum of 25 ns. This means when IFCLK is running at 48 MHz, the FIFO address setup time is more than one IFCLK cycle.

- At t = 1, SLOE is asserted. SLOE is an output enable only, whose sole function is to drive the data bus. The data that is driven on the bus is the data that the internal FIFO pointer is currently pointing to. In this example it is the first data value in the FIFO.

  Note The data is pre-fetched and is driven on the bus when SLOE is asserted.

- At t = 2, SLRD is asserted. SLRD must meet the setup time of t_{SRD} (time from asserting the SLRD signal to the rising edge of the IFCLK) and maintain a minimum hold time of t_{RDH} (time from the IFCLK edge to the deassertion of the SLRD signal). If the SLCS signal is used, it must be asserted with SLRD, or before SLRD is asserted (that is, the SLCS and SLRD signals must both be asserted to start a valid read condition).

- The FIFO pointer is updated on the rising edge of the IFCLK, while SLRD is asserted. This starts the propagation of data from the newly addressed location to the data bus. After a propagation delay of t_{XFD} (measured from the rising edge of IFCLK) the new data value is present. N is the first data value read from the FIFO. To have data on the FIFO data bus, SLOE MUST also be asserted.

The same sequence of events are shown for a burst read and are marked with the time indicators of T = 0 through 5.

[+] Feedback

Note For the burst mode, the SLRD and SLOE are left asserted during the entire duration of the read. In the burst read mode, when SLOE is asserted, data indexed by the FIFO pointer is on the data bus. During the first read cycle, on the rising edge of the clock the FIFO pointer is updated and increments to point to address N+1. For each subsequent rising edge of IFCLK, while the SLRD is asserted, the FIFO pointer is incremented and the next data value is placed on the data bus.

Single and Burst Synchronous Write

In the following figure, dashed lines indicate signals with programmable polarity.

Figure 32. Slave FIFO Synchronous Write Sequence and Timing Diagram

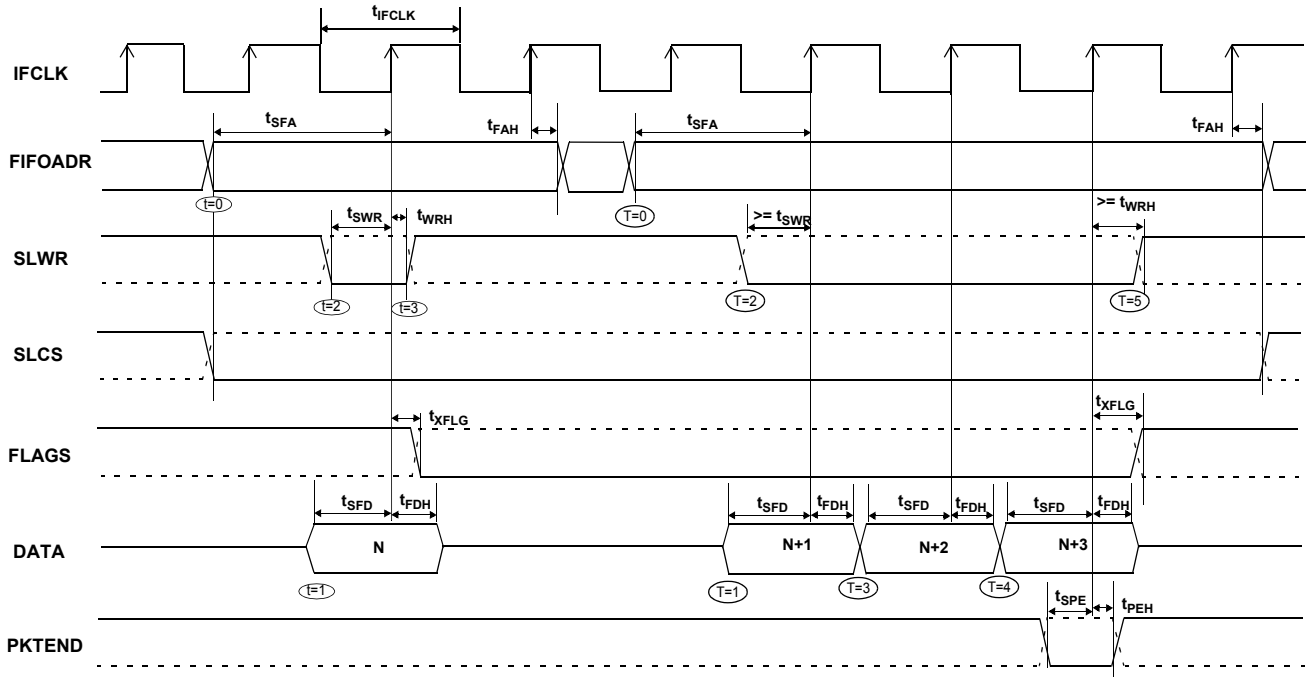

Figure 32 shows the timing relationship of the SLAVE FIFO signals during a synchronous write using IFCLK as the synchronizing clock. This diagram illustrates a single write followed by burst write of 3 bytes and committing all 4 bytes as a short packet using the PKTEND pin.

- At t = 0 the FIFO address is stable and the signal SLCS is asserted (SLCS may be tied low in some applications).

  Note t_{SFA} has a minimum of 25 ns. This means when IFCLK is running at 48 MHz, the FIFO address setup time is more than one IFCLK cycle.

- At t = 1, the external master or peripheral must output the data value onto the data bus with a minimum set up time of t_{SFD} before the rising edge of IFCLK.
- At t = 2, SLWR is asserted. The SLWR must meet the setup time of t_{SWR} (time from asserting the SLWR signal to the rising edge of IFCLK) and maintain a minimum hold time of t_{WRH} (time from the IFCLK edge to the deassertion of the SLWR signal). If SLCS signal is used, it must be asserted with SLWR or before SLWR is asserted. (that is the SLCS and SLWR signals must both be asserted to start a valid write condition).
- While the SLWR is asserted, data is written to the FIFO and on the rising edge of the IFCLK, the FIFO pointer is incremented. The FIFO flag is also updated after a delay of t_{XFLG} from the rising edge of the clock.

The same sequence of events are also shown for a burst write and are marked with the time indicators of T = 0 through 5.

Note For the burst mode, SLWR and SLCS are left asserted for the entire duration of writing all the required data values. In this burst write mode, after the SLWR is asserted, the data on the FIFO data bus is written to the FIFO on every rising edge of IFCLK. The FIFO pointer is updated on each rising edge of IFCLK. In Figure 32, after the four bytes are written to the FIFO, SLWR is deasserted. The short 4-byte packet is committed to the host by asserting the PKTEND signal.

There is no specific timing requirement that must be met for asserting the PKTEND signal with regards to asserting the SLWR signal. PKTEND is asserted with the last data value or thereafter. The only consideration is the setup time t_{SPE} and the hold time t_{PEH} must be met. In the scenario of Figure 32, the number of data values committed includes the last value written to the FIFO. In this example, both the data value and the PKTEND signal are clocked on the same rising edge of IFCLK. PKTEND is asserted in subsequent clock cycles. The FIFOADDR lines must be held constant during the PKTEND assertion.

[+] Feedback

Although there are no specific timing requirement for asserting PKTEND, there is a specific corner case condition that needs attention while using the PKTEND to commit a one byte or word packet. Additional timing requirements exist when the FIFO is configured to operate in auto mode and it is necessary to send two packets: a full packet (full defined as the number of bytes in the FIFO meeting the level set in AUTOINLEN register) committed automatically followed by a short one byte or word packet committed manually using the PKTEND pin. In this case, the external master must make sure to assert the PKTEND pin at least one clock cycle after the rising edge that caused the last byte or word to be clocked into the previous auto committed packet (the packet with the number of bytes equal to what is set in the AUTOINLEN register). Refer to Table 20 on page 39 for further details on this timing.

Sequence Diagram of a Single and Burst Asynchronous Read

Figure 33. Slave FIFO Asynchronous Read Sequence and Timing Diagram

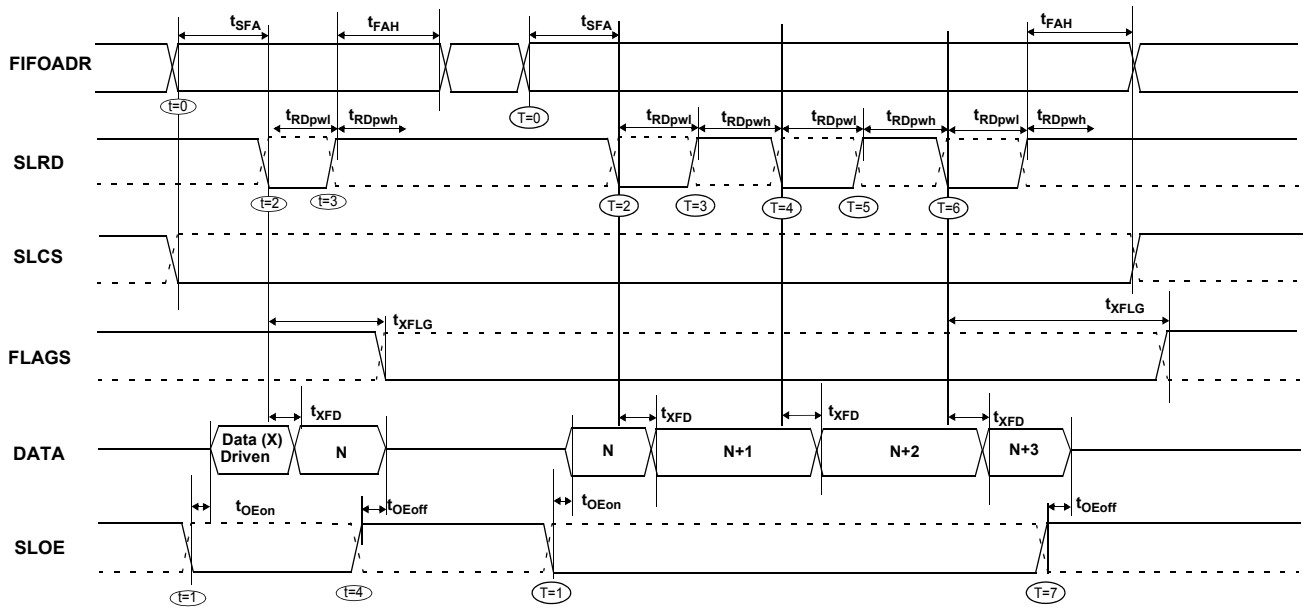

Figure 34. Slave FIFO Asynchronous Read Sequence of Events Diagram

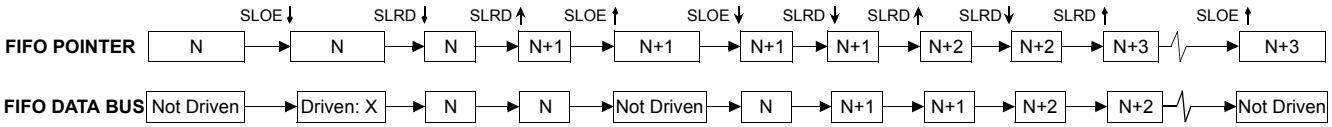

Figure 33 shows the timing relationship of the SLAVE FIFO signals during an asynchronous FIFO read. It shows a single read followed by a burst read.

- At t = 0 the FIFO address is stable and the SLCS signal is asserted.
- At t = 1, SLOE is asserted. This results in the data bus being driven. The data that is driven on to the bus is previous data, it data that was in the FIFO from a prior read cycle.
- At t = 2, SLRD is asserted. The SLRD must meet the minimum active pulse of t_{RDpwl} and minimum de-active pulse width of t_{RDpwh}. If SLCS is used then, SLCS must be in asserted with SLRD or before SLRD is asserted (that is, the SLCS and SLRD signals must both be asserted to start a valid read condition).
- The data that drives after asserting SLRD, is the updated data from the FIFO. This data is valid after a propagation delay of t_{XFD} from the activating edge of SLRD. In Figure 33, data N is the first valid data read from the FIFO. For data to appear on the data bus during the read cycle (that is, SLRD is asserted), SLOE MUST be in an asserted state. SLRD and SLOE can also be tied together.

The same sequence of events is also shown for a burst read marked with T = 0 through 5.

Note In burst read mode, during SLOE is assertion, the data bus is in a driven state and outputs the previous data. After the SLRD is asserted, the data from the FIFO is driven on the data bus (SLOE must also be asserted) and then the FIFO pointer is incremented.

[+] Feedback

Sequence Diagram of a Single and Burst Asynchronous Write

In the following figure, dashed lines indicate signals with programmable polarity.

Figure 35. Slave FIFO Asynchronous Write Sequence and Timing Diagram

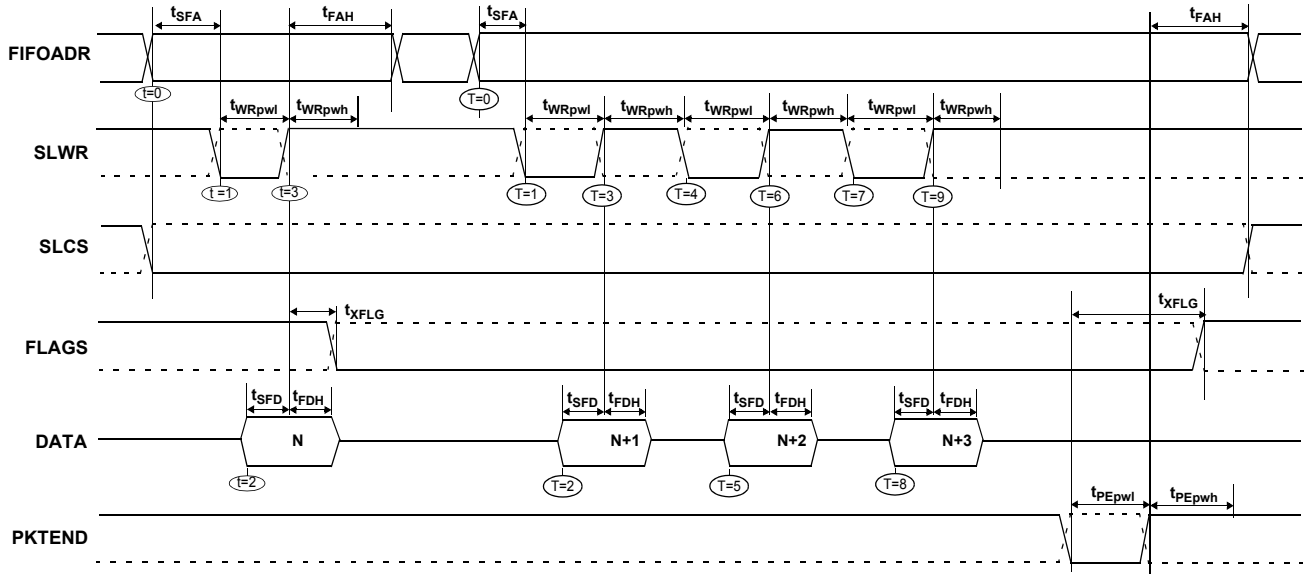

Figure 35 shows the timing relationship of the SLAVE FIFO write in an asynchronous mode. This diagram shows a single write followed by a burst write of 3 bytes and committing the 4-byte-short packet using PKTEND.

- At t = 0 the FIFO address is applied, insuring that it meets the setup time of t_{SFA}. If SLCS is used, it must also be asserted (SLCS may be tied low in some applications).
- At t = 1 SLWR is asserted. SLWR must meet the minimum active pulse of t_{WRpwl} and minimum de-active pulse width of t_{WRpwh}. If the SLCS is used, it must be in asserted with SLWR or before SLWR is asserted.
- At t = 2, data must be present on the bus t_{SFD} before the deasserting edge of SLWR.
- At t = 3, deasserting SLWR causes the data to be written from the data bus to the FIFO and then increments the FIFO pointer. The FIFO flag is also updated after t_{XFLG} from the deasserting edge of SLWR.

The same sequence of events are shown for a burst write and is indicated by the timing marks of T = 0 through 5.

Note In the burst write mode, after SLWR is deasserted, the data is written to the FIFO and then the FIFO pointer is incremented to the next byte in the FIFO. The FIFO pointer is post incremented.

In Figure 35, after the four bytes are written to the FIFO and SLWR is deasserted, the short 4-byte packet is committed to the host using the PKTEND. The external device must be designed to not assert SLWR and the PKTEND signal at the same time. It must be designed to assert the PKTEND after SLWR is deasserted and has met the minimum deasserted pulse width. The FIFOADDR lines are to be held constant during the PKTEND assertion.

Ordering Information

Table 29. Ordering Information

Ordering Code	Package Type	RAM Size	# Prog I/Os	8051 Address /Data Busses
CY7C64713-128AXC	128 TQFP - Pb-free	16K	40	16/8 bit
CY7C64713-100AXC	100 TQFP - Pb-free	16K	40	-
CY7C64713-56PVXC	56 SSOP - Pb-free	16K	24	-
CY7C64713-56LFXC	56 QFN - Pb-free	16K	24	-
CY7C64713-56LTXC	56 QFN	16K	24	-
CY3674	EZ-USB FX1 Development Kit			

Package Diagrams

The FX1 is available in four packages:

- 56 Pin SSOP
- 56 Pin QFN
- 100 Pin TQFP
- 128 Pin TQFP

Figure 36. 56-Pin Shrunk Small Outline Package O56

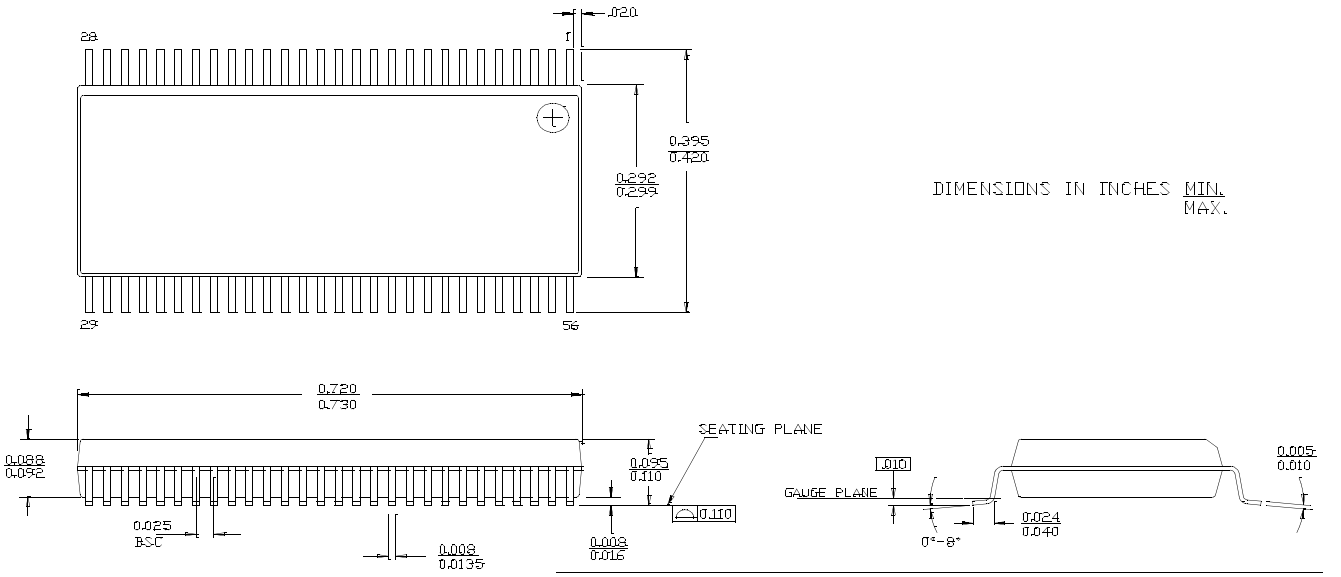

51-85062-*C

Figure 37. 56-Pin QFN 8 x 8 mm LF56A

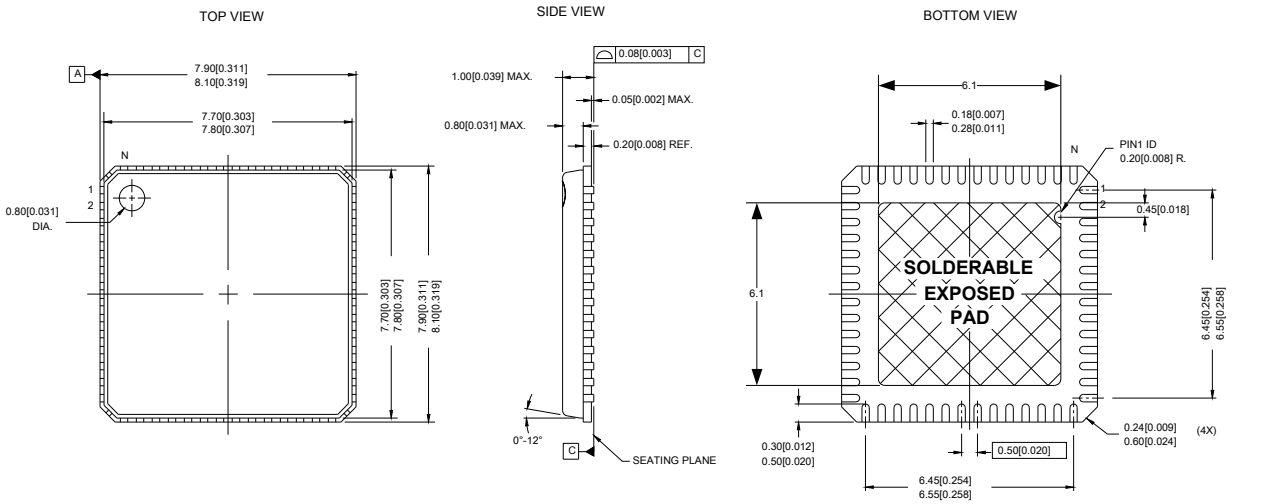

NOTES:

1. HATCH AREA IS SOLDERABLE EXPOSED METAL.
2. REFERENCE JEDEC#: MO-220
3. PACKAGE WEIGHT: 0.162g
4. ALL DIMENSIONS ARE IN MM [MIN/MAX]
5. PACKAGE CODE

PART #	DESCRIPTION
LF56	STANDARD
LY56	PB-FREE

51-85144-*G

(SUBCON PUNCH TYPE PKG with 6.1 x 6.1 EPAD)

Figure 38. 56-Pin QFN 8 x 8 mm (Sawn Version)

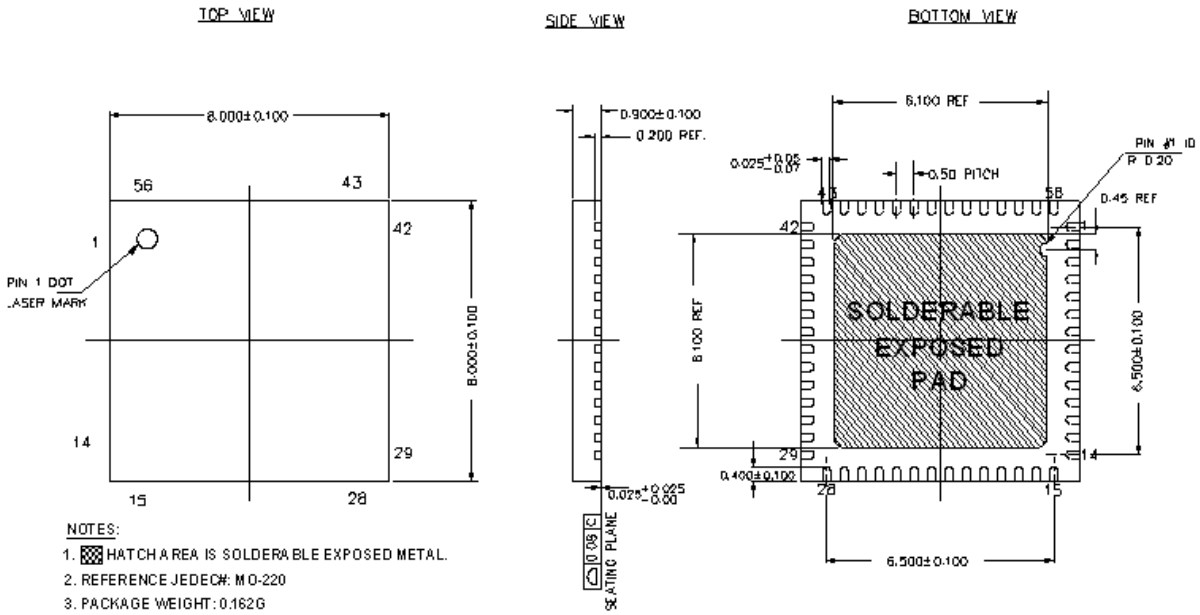

NOTES:

1. HATCH AREA IS SOLDERABLE EXPOSED METAL.
2. REFERENCE JEDEC#: MO-220
3. PACKAGE WEIGHT: 0.162G
4. ALL DIMENSIONS ARE IN MILLIMETERS

51-85187 *C

[+] Feedback

Figure 39. 100-Pin Thin Plastic Quad Flatpack (14 x 20 x 1.4 mm) A101

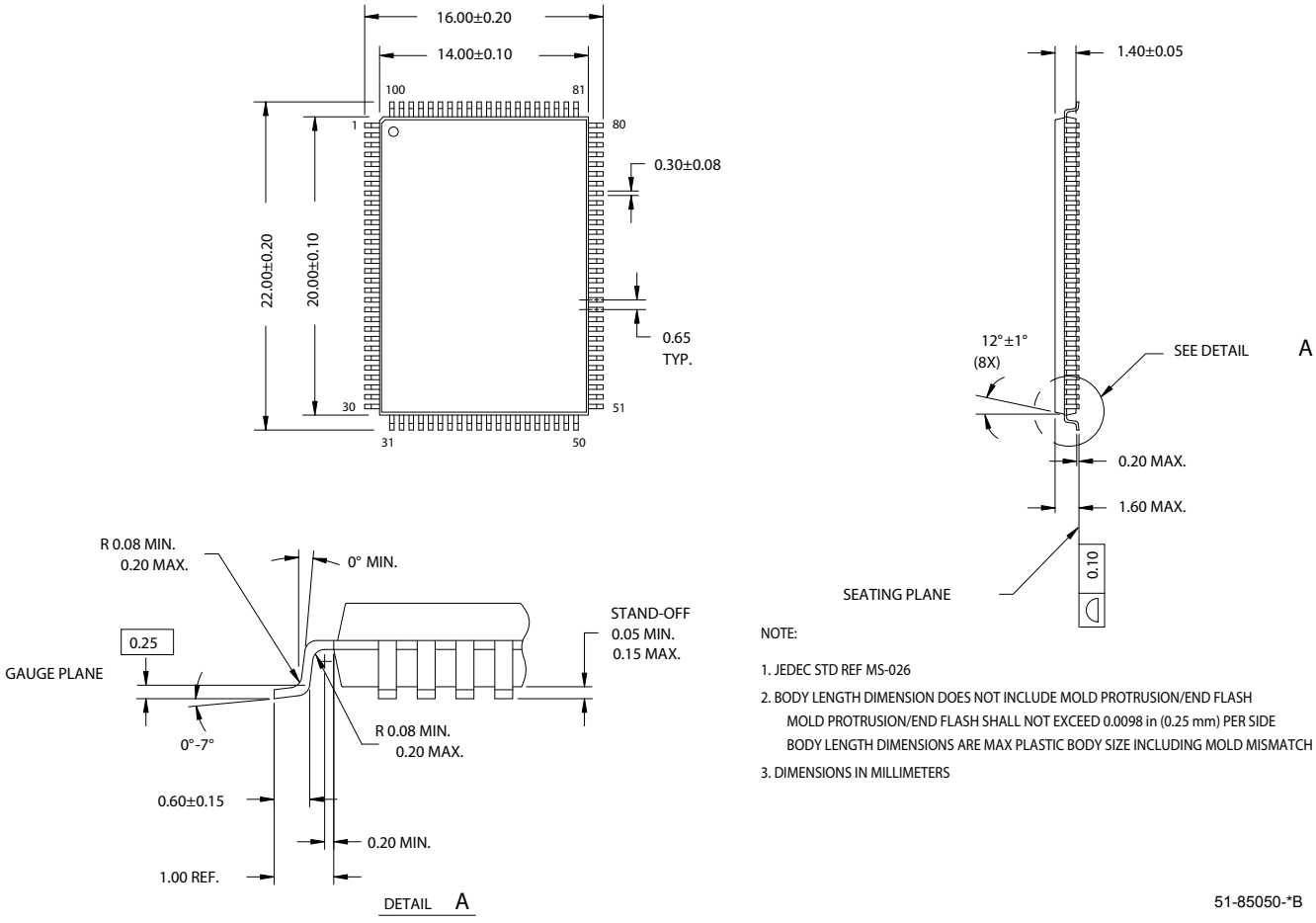

NOTE:

1. JEDEC STD REF MS-026
2. BODY LENGTH DIMENSION DOES NOT INCLUDE MOLD PROTRUSION/END FLASH
   MOLD PROTRUSION/END FLASH SHALL NOT EXCEED 0.0098 in (0.25 mm) PER SIDE
   BODY LENGTH DIMENSIONS ARE MAX PLASTIC BODY SIZE INCLUDING MOLD MISMATCH
3. DIMENSIONS IN MILLIMETERS

51-85050-*B

Figure 40. 128-Pin Thin Plastic Quad Flatpack (14 x 20 x 1.4 mm) A128

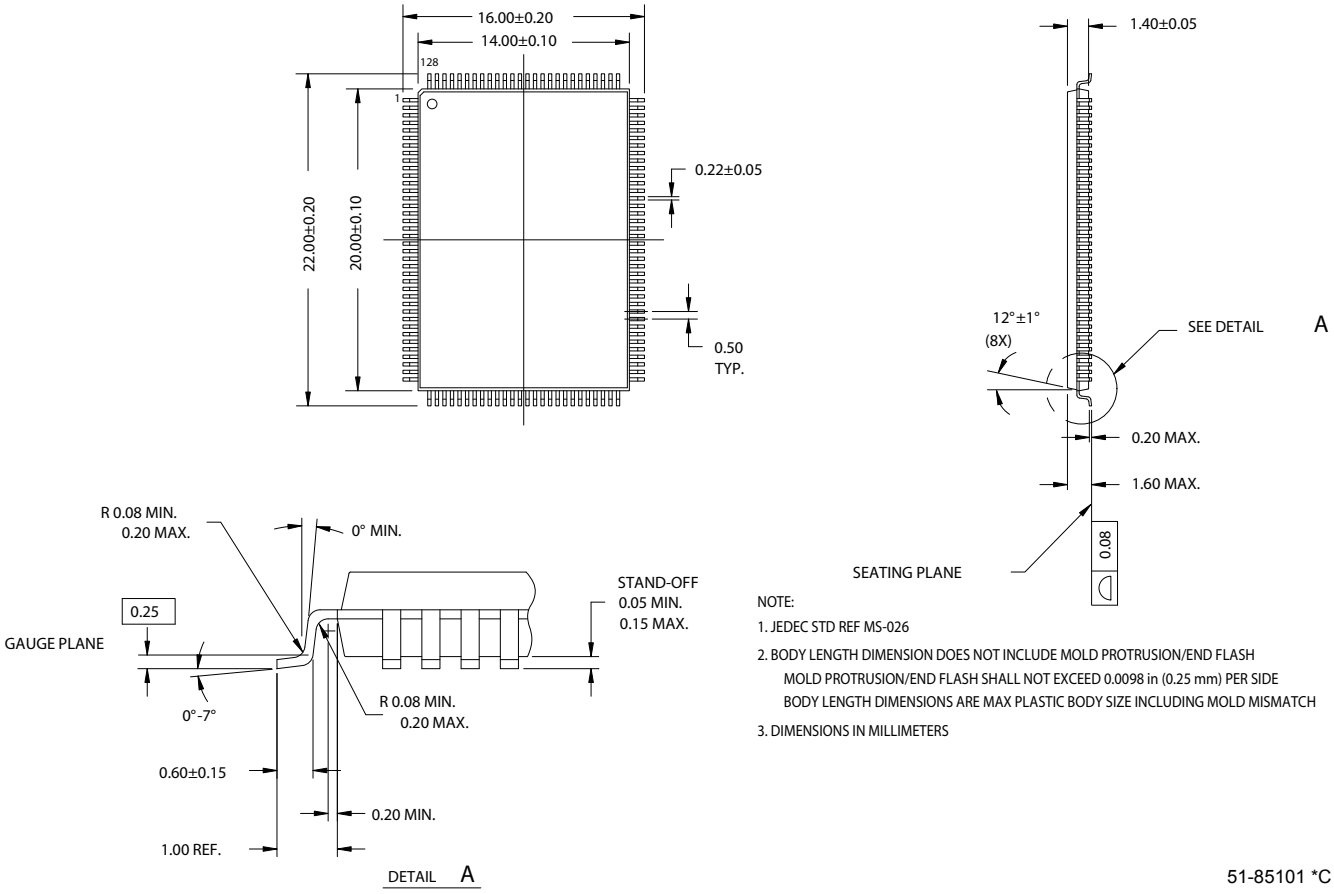

Quad Flat Package No Leads (QFN) Package Design Notes

Electrical contact of the part to the Printed Circuit Board (PCB) is made by soldering the leads on the bottom surface of the package to the PCB. As a result, special attention is required to the heat transfer area below the package to provide a good thermal bond to the circuit board. A Copper (Cu) fill is to be designed into the PCB as a thermal pad under the package. Heat is transferred from the FX1 through the device's metal paddle on the bottom side of the package. Heat from here, is conducted to the PCB at the thermal pad. It is then conducted from the thermal pad to the PCB inner ground plane by a 5 x 5 array of via. A via is a plated through hole in the PCB with a finished diameter of 13 mil. The QFN's metal die paddle must be soldered to the PCB's thermal pad. Solder mask is placed on the board top side over each via to resist solder flow into the via. The mask on the top side also minimizes outgassing during the solder reflow process.

For further information on this package design please refer to 'Application Notes for Surface Mount Assembly of Amkor's MicroLeadFrame (MLF) Packages'. This can be found on Amkor's website http://www.amkor.com.

The application note provides detailed information on board mounting guidelines, soldering flow, rework process, and so on.

Figure 41 on page 53 displays a cross-sectional area underneath the package. The cross section is of only one via. The solder paste template needs to be designed to allow at least 50% solder coverage. The thickness of the solder paste template must be 5 mil. It is recommended that 'No Clean' type 3 solder paste is used for mounting the part. Nitrogen purge is recommended during reflow.

Figure 42 on page 53 is a plot of the solder mask pattern and Figure 43 on page 53 displays an X-Ray image of the assembly (darker areas indicate solder).

[+] Feedback

Figure 41. Cross section of the Area Underneath the QFN Package

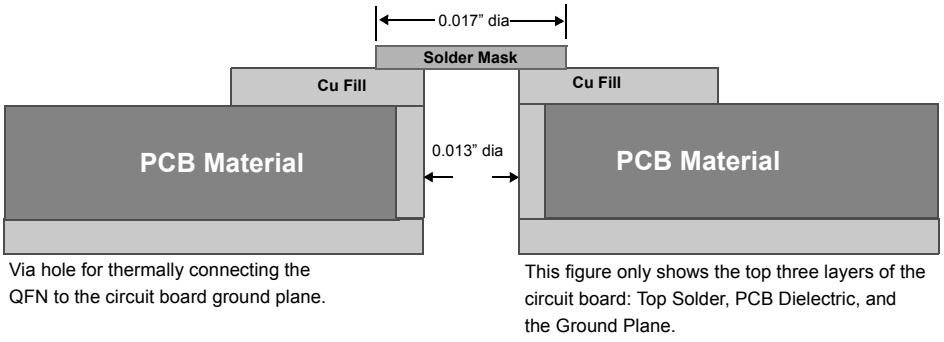

Figure 42. Plot of the Solder Mask (White Area)

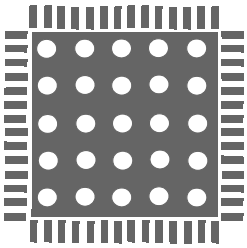

Figure 43. X-ray Image of the Assembly

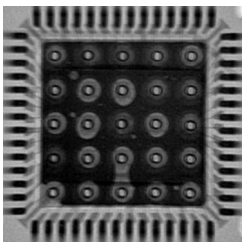

Document History Page

Document Title: CY7C64713 EZ-USB FX1™ USB Microcontroller Full Speed USB Peripheral Controller Document Number: 38-08039				
REV.	**ECN NO.**	**Issue Date**	**Orig. of Change**	**Description of Change**
**	132091	02/10/04	KKU	New Data Sheet.
*A	230709	SEE ECN	KKU	Changed Lead free Marketing part numbers in Table 29 according to spec change in 28-00054.
*B	307474	SEE ECN	BHA	Changed default PID in Table 2 on page 4. Updated register table. Removed word compatible where associated with I2C. Changed Set-up to Setup. Added Power Dissipation. Changed Vcc from ± 10% to ± 5% Added values for V_{IH_X}, V_{IL_X} Added values for I_{CC} Added values for I_{SUSP} Removed $I_{UNCONFIGURED}$ from Table 10 on page 31. Changed PKTEND to FLAGS output propagation delay (asynchronous interface) in Table 10-14 from a maximum value of 70 ns to 115 ns. Removed 56 SSOP and added 56 QFN package. Provided additional timing restrictions and requirement regarding the use of PKTEND pin to commit a short one byte/word packet subsequent to committing a packet automatically (when in auto mode). Added part number CY7C64714 ideal for battery powered applications. Changed Supply Voltage in section 8 to read +3.15V to +3.45V. Added Min Vcc Ramp Up time (0 to 3.3v). Removed Preliminary.
*C	392702	SEE ECN	BHA	Corrected signal name for pin 54 in Figure 10 on page 15. Added information on the AUTOPTR1/AUTOPTR2 address timing with regards to data memory read/write timing diagram. Removed TBD in Table 16 on page 37. Added section “PORTC Strobe Feature Timings” on page 35.
*D	1664787	See ECN	CMCC/ JASM	Added the 56 pin SSOP pinout and package information. Delete CY7C64714
*E	2088446	See ECN	JASM	Updated package diagrams
*F	2710327	05/22/2009	DPT	Added 56-Pin QFN (8 X 8 mm) package diagram Updated ordering information for CY7C64713-56LTXC part

Sales, Solutions, and Legal Information

Worldwide Sales and Design Support

Cypress maintains a worldwide network of offices, solution centers, manufacturer's representatives, and distributors. To find the office closest to you, visit us at cypress.com/sales.

Products

PSoC	psoc.cypress.com
Clocks & Buffers	clocks.cypress.com
Wireless	wireless.cypress.com
Memories	memory.cypress.com
Image Sensors	image.cypress.com

PSoC Solutions

General	psoc.cypress.com/solutions
Low Power/Low Voltage	psoc.cypress.com/low-power
Precision Analog	psoc.cypress.com/precision-analog
LCD Drive	psoc.cypress.com/lcd-drive
CAN 2.0b	psoc.cypress.com/can
USB	psoc.cypress.com/usb

© Cypress Semiconductor Corporation, 2004-2009. The information contained herein is subject to change without notice. Cypress Semiconductor Corporation assumes no responsibility for the use of any circuitry other than circuitry embodied in a Cypress product. Nor does it convey or imply any license under patent or other rights. Cypress products are not warranted nor intended to be used for medical, life support, life saving, critical control or safety applications, unless pursuant to an express written agreement with Cypress. Furthermore, Cypress does not authorize its products for use as critical components in life-support systems where a malfunction or failure may reasonably be expected to result in significant injury to the user. The inclusion of Cypress products in life-support systems application implies that the manufacturer assumes all risk of such use and in doing so indemnifies Cypress against all charges.

Any Source Code (software and/or firmware) is owned by Cypress Semiconductor Corporation (Cypress) and is protected by and subject to worldwide patent protection (United States and foreign), United States copyright laws and international treaty provisions. Cypress hereby grants to licensee a personal, non-exclusive, non-transferable license to copy, use, modify, create derivative works of, and compile the Cypress Source Code and derivative works for the sole purpose of creating custom software and or firmware in support of licensee product to be used only in conjunction with a Cypress integrated circuit as specified in the applicable agreement. Any reproduction, modification, translation, compilation, or representation of this Source Code except as specified above is prohibited without the express written permission of Cypress.

Disclaimer: CYPRESS MAKES NO WARRANTY OF ANY KIND, EXPRESS OR IMPLIED, WITH REGARD TO THIS MATERIAL, INCLUDING, BUT NOT LIMITED TO, THE IMPLIED WARRANTIES OF MERCHANTABILITY AND FITNESS FOR A PARTICULAR PURPOSE. Cypress reserves the right to make changes without further notice to the materials described herein. Cypress does not assume any liability arising out of the application or use of any product or circuit described herein. Cypress does not authorize its products for use as critical components in life-support systems where a malfunction or failure may reasonably be expected to result in significant injury to the user. The inclusion of Cypress' product in a life-support systems application implies that the manufacturer assumes all risk of such use and in doing so indemnifies Cypress against all charges.

Use may be limited by and subject to the applicable Cypress software license agreement.

Purchase of I2C components from Cypress, or one of its sublicensed Associated Companies, conveys a license under the Philips I2C Patent Rights to use these components in an I2C system, provided that the system conforms to the I2C Standard Specification as defined by Philips. EZ-USB FX1, EZ-USB FX2LP, EZ-USB FX2, and ReNumeration are trademarks, and EZ-USB is a registered trademark, of Cypress Semiconductor. All product and company names mentioned in this document are the trademarks of their respective holders.