CY7C266

8Kx8 Power-Switched and Reprogrammable PROM

Features

- **CMOS for optimum speed/power**
- **Windowed for reprogrammability**
- **High speed**
  - **— 20 ns (Commercial)**
- **Low power**
  - **— 660 mW (Commercial)**
- **Super low standby power**
  - **— Less than 85 mW when deselected**
- **EPROM technology 100% programmable**
- **5V ±10% V_{CC}, commercial and military**
- **TTL-compatible I/O**
- **Direct replacement for 27C64 EPROMs**

Functional Description

The CY7C266 is a high-performance 8192-word by 8-bit CMOS PROM. When deselected, the CY7C266 automatically powers down into a low-power standby mode. It is packaged in a 600-mil-wide package. The reprogrammable packages are equipped with an erasure window; when exposed to UV light, these PROMs are erased and can then be reprogrammed. The memory cells utilize proven EPROM floating-gate technology and byte-wide intelligent programming algorithms.

The CY7C266 is a plug-in replacement for EPROM devices. The EPROM cell requires only 12.5V for the super voltage and low-current requirements allow for gang programming. The EPROM cells allow for each memory location to be tested 100%, as each location is written into, erased, and repeatedly exercised prior to encapsulation. Each PROM is also tested for AC performance to guarantee that after customer programming, the product will meet DC and AC specification limits.

Reading is accomplished by placing an active LOW signal on $\overline{OE}$ and $\overline{CE}$. The contents of the memory location addressed by the address lines (A_0 through A_{12}) will become available on the output lines (O_0 through O_7).

Logic Block Diagram

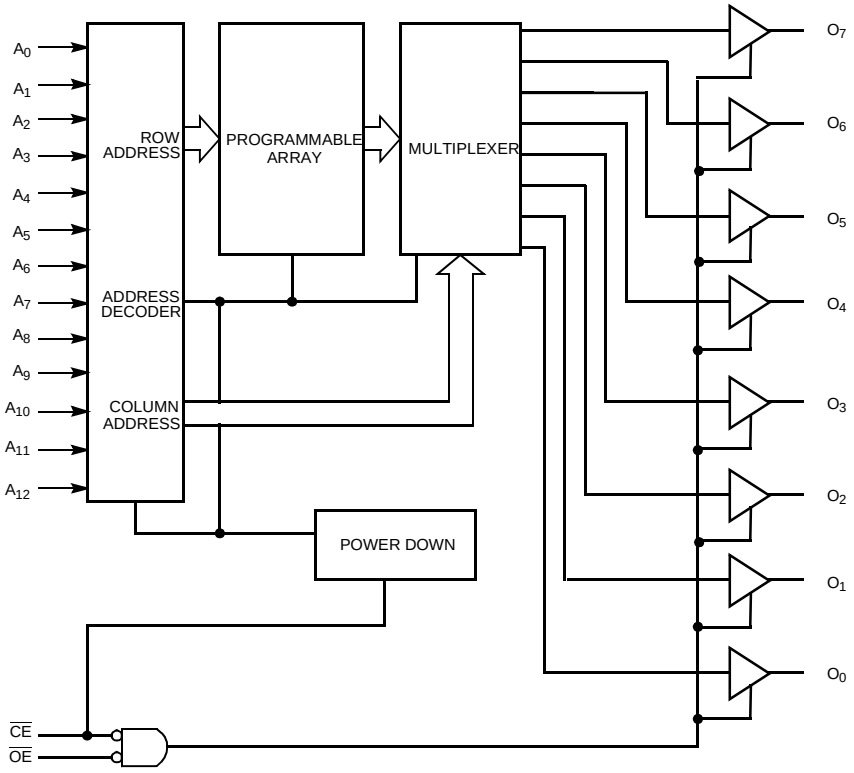

Pin Configurations

CerDIP
Top View

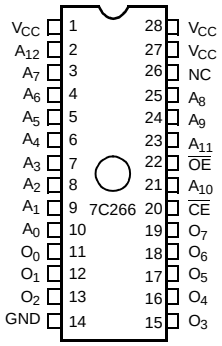

LCC
Top View

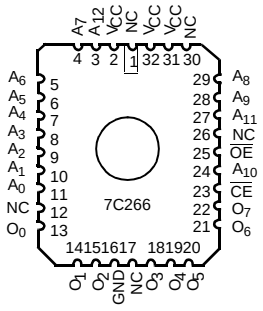

Selection Guide

		7C266-20	7C266-25	7C266-45	Unit
Maximum Access Time		20	25	45	ns
Maximum Operating Current	Commercial	120	120	100	mA
Maximum Standby Current	Commercial	15	15	15	mA

Maximum Ratings[1]

(Above which the useful life may be impaired. For user guidelines, not tested.)

Storage Temperature ..... –65°C to +150°C

Ambient Temperature with Power Applied..... –55°C to +125°C

Supply Voltage to Ground Potential (Pin 28 to Pin 14) ..... –0.5V to +7.0V

DC Voltage Applied to Outputs in High Z State ..... –0.5V to +7.0V

DC Input Voltage..... –3.0V to +7.0V

DC Program Voltage 13.0V

Static Discharge Voltage..... > 2001V (per MIL-STD-883, Method 3015)

Latch-Up Current..... > 200 mA

UV Exposure ..... 7258 Wsec/cm^2

Operating Range

Range	Ambient Temperature	V_{CC}
Commercial	0°C to +70°C	5V ± 10%

Electrical Characteristics Over the Operating Range[2]

Parameter	Description	Test Conditions		7C266-20 Min.	7C266-20 Max.	7C266-25 Min.	7C266-25 Max.	Unit
V_{OH}	Output HIGH Voltage	V_{CC} = Min., I_{OH} = –2.0 mA	Com'l	2.4		2.4		V
						2.4		
V_{OL}	Output LOW Voltage	V_{CC} = Min., I_{OL} = 8.0 mA	Com'l		0.4		0.4	V
V_{IH}	Input HIGH Voltage			2.0		2.0		V
V_{IL}	Input LOW Voltage				0.8		0.8	V
I_{IX}	Input Current	GND ≤ V_{IN} ≤ V_{CC}		–10	+10	–10	+10	µA
V_{CD}	Input Diode Clamp Voltage			Note 3				
I_{OZ}	Output Leakage Current	V_{OL} ≤ V_{OUT} ≤ V_{OH}, Output Disabled		–40	+40	–40	+40	µA
I_{OS}	Output Short Circuit Current[3]	V_{CC} = Max., V_{OUT} = GND		–20	–90	–20	–90	mA
I_{CC}	Power Supply Current	V_{CC} = Max., V_{IN} = 2.0V, I_{OUT} = 0 mA	Com'l		120		120	mA
I_{SB}	Standby Supply Current	Chip Enable Inactive, $\overline{CE}$ ≥ V_{IH}, I_{OUT} = 0 mA	Com'l		15		15	mA

Notes:
1. The voltage on any input or I/O pin cannot exceed the power pin during power-up.
2. See the "Introduction to CMOS PROMs" section of the Cypress Data Book for general information on testing.
3. For test purposes, not more than one output at a time should be shorted. Short circuit test duration should not exceed 30 seconds.

Electrical Characteristics Over the Operating Range[2] (continued)

Parameter	Description	Test Conditions		7C266-45 Min.	7C266-45 Max.	Unit
V_{OH}	Output HIGH Voltage	V_{CC} = Min., I_{OH} = –4.0 mA		2.4		V
V_{OL}	Output LOW Voltage	V_{CC} = Min., I_{OL} = 16.0 mA			0.4	V
V_{IH}	Input HIGH Voltage			2.0		V
V_{IL}	Input LOW Voltage				0.8	V
I_{IX}	Input Current	GND ≤ V_{IN} ≤ V_{CC}		–10	+10	mA
V_{CD}	Input Diode Clamp Voltage			Note 3		
I_{OZ}	Output Leakage Current	V_{OL} ≤ V_{OUT} ≤ V_{OH}, Output Disabled		–10	+10	mA
I_{OS}	Output Short Circuit Current[3]	V_{CC} = Max., V_{OUT} = GND		–20	–90	mA
I_{CC}	Power Supply Current	V_{CC} = Max., V_{IN} = 2.0V, I_{OUT} = 0 mA	Com'l		100	mA
I_{SB}	Standby Supply Current	$\overline{\text{Chip}}$ Enable Inactive, $\overline{CE}$ ≥ V_{IH}, I_{OUT} = 0 mA	Com'l		15	mA

Capacitance[2]

Parameter	Description	Test Conditions	Max.	Unit
C_{IN}	Input Capacitance	T_A = 25°C, f = 1 MHz, V_{CC} = 5.0V	10	pF
C_{OUT}	Output Capacitance		10	pF

AC Test Loads and Waveforms

Test Load for -20 through -25 speeds

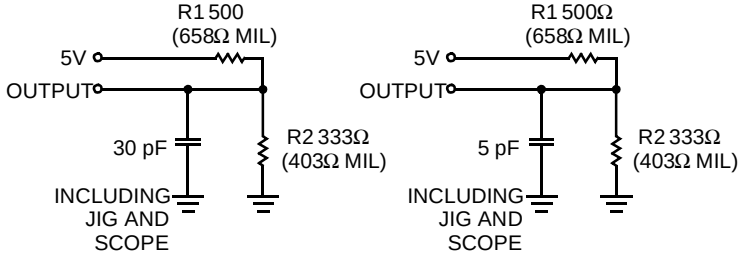

(a) Normal Load **(b) High Z Load**

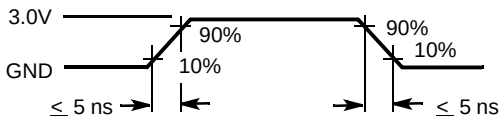

Equivalent to: THÉVENIN EQUIVALENT



Test Load for -35 through -45 speeds

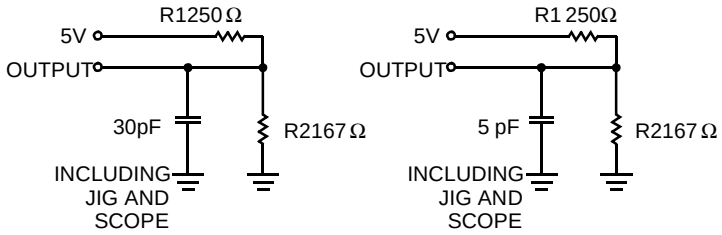

(c) Normal Load **(d) High Z Load**

Equivalent to: THÉVENIN EQUIVALENT

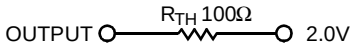

Switching Characteristics Over the Operating Range[2]

Parameter	Description	7C266-20		7C266-25		7C266-45		Unit
		Min.	Max.	Min.	Max.	Min.	Max.	
t_{AA}	Address to Output Valid		20		25		45	ns
t_{HZCE}	Chip Enable Inactive to High Z		25		30		45	ns
t_{HZOE}	Output Enable Inactive to High Z		12		12		20	ns
t_{AOE}	Output Enable Active to Output Valid		12		12		20	ns
t_{ACE}	Chip Enable Active to Output Valid		25		30		45	ns
t_{OHA}	Data Hold from Address Change	3		3		3		ns
t_{PU}	Chip Enable Active to Power-up		25		30		45	ns
t_{PD}	Chip Enable Inactive to Power-down		25		30		45	ns

Erasure Characteristics

Wavelengths of light less than 4000 angstroms begin to erase the devices in the windowed package. For this reason, an opaque label should be placed over the window if the EPROM is exposed to sunlight or fluorescent lighting for extended periods of time.

The recommended dose of ultraviolet light for erasure is a wavelength of 2537 angstroms for a minimum dose (UV intensity multiplied by exposure time) of 25 Wsec/cm^2. For an ultraviolet lamp with a 12 mW/cm^2 power rating, the exposure time would be approximately 35 minutes. The CY7C266 needs to be within 1 inch of the lamp during erasure. Permanent damage may result if the EPROM is exposed to high-intensity UV light for an extended period of time.

7258 Wsec/cm2 is the recommended maximum dosage.

Programming Modes

Programming support is available from Cypress as well as from a number of third party software vendors. For detailed programming information, including a listing of software packages, please see the PROM Programming Information located at the end of this section. Programming algorithms can be obtained from any Cypress representative.

Table 1. Mode Selection

		Pin Function[4, 5]							
	Normal Operation	**A_8**	**A_9**	**A_{10}**	**A_{11}**	**A_{12}**	**CE**	**OE**	**D_7–D_0**
Mode	**Program**	**VFY**	**PGM**	**LAT**	**NA**	**NA**	**CE**	**V_{PP}**	**D_7–D_0**
Read		A_8	A_9	A_{10}	A_{11}	A_{12}	V_{IL}	V_{IL}	O_7–O_0
Standby		X	X	X	X	X	V_{IH}	X	Three-Stated
Output Disable		A_8	A_9	A_{10}	A_{11}	A_{12}	V_{IL}	V_{IH}	Three-Stated
Program		V_{IHP}	V_{ILP}	V_{ILP}	V_{ILP}	V_{ILP}	V_{ILP}	V_{PP}	D_7–D_0
Program Verify		V_{ILP}	V_{IHP}	V_{ILP}	V_{ILP}	V_{ILP}	V_{ILP}	V_{PP}	O_7–O_0
Program Inhibit		V_{IHP}	V_{IHP}	V_{ILP}	V_{ILP}	V_{ILP}	V_{ILP}	V_{PP}	Three-Stated
Blank Check		V_{ILP}	V_{IHP}	V_{ILP}	V_{ILP}	V_{ILP}	V_{ILP}	V_{PP}	O_7–O_0

Notes:
4. X = "don't care" but must not exceed V_{CC} + 5%.
5. Address A_8–A_{12} must be latched through lines A_0–A_4 in Programming modes.

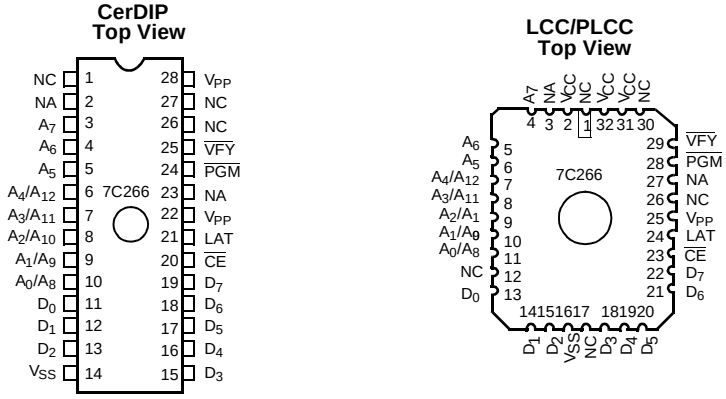

Figure 1. Programming Pinout

Typical DC and AC Characteristics

NORMALIZED SUPPLY CURRENT vs. SUPPLY VOLTAGE

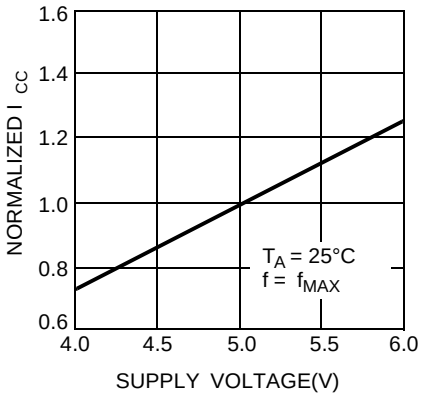

NORMALIZED SUPPLY CURRENT vs. AMBIENT TEMPERATURE

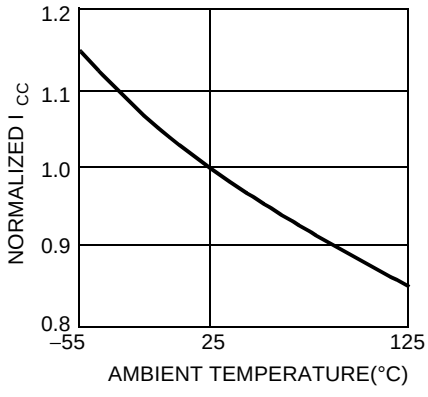

NORMALIZED ACCESS TIME vs. SUPPLY VOLTAGE

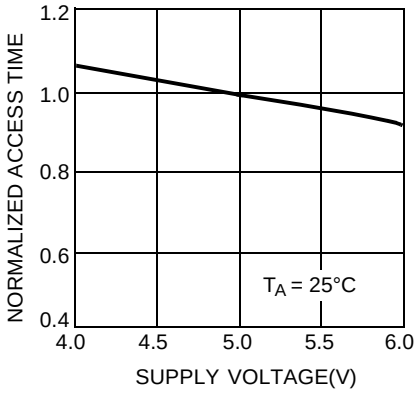

NORMALIZED ACCESS TIME vs. TEMPERATURE

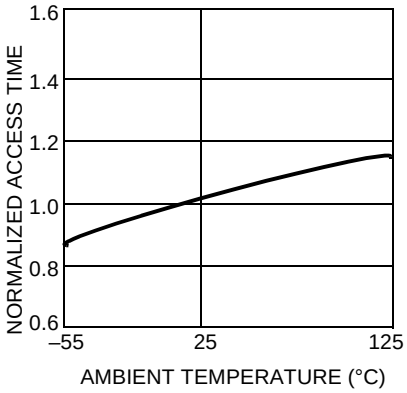

OUTPUT SOURCE CURRENT vs. VOLTAGE

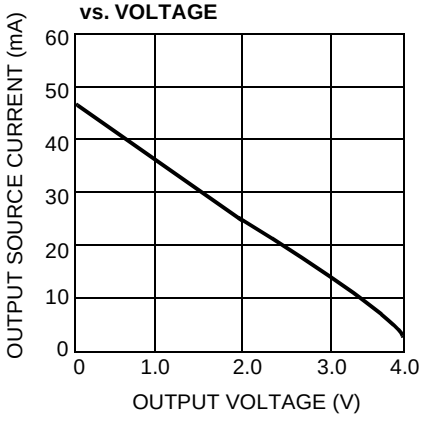

TYPICAL ACCESS TIME CHANGE vs. OUTPUT LOADING

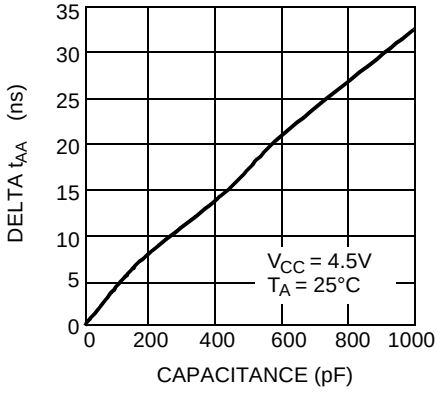

OUTPUT SINK CURRENT vs. OUTPUT VOLTAGE

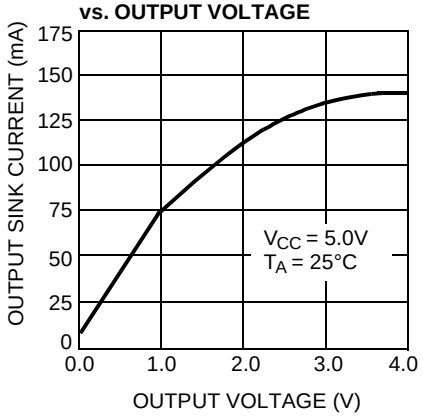

NORMALIZED SUPPLY CURRENT vs. CYCLE PERIOD

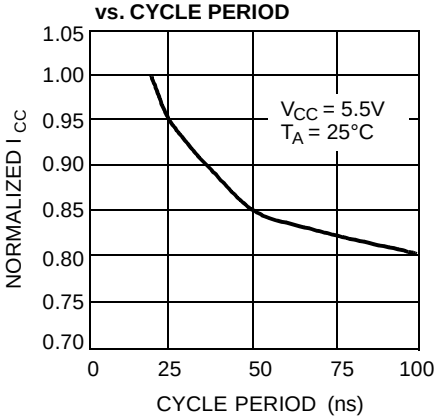

Ordering Information[]

Speed (ns)	Ordering Code	Package Name	Package Type	Operating Range
20	CY7C266-20JC	J64	28-Lead Plastic Leaded Chip Carrier	Commercial
	CY7C266-20WC	W16	28-Lead (600-Mil) Windowed CerDIP	
25	CY7C266-25JC	J64	28-Lead Plastic Leaded Chip Carrier	Commercial
45	CY7C266-45PC	P15	28-Lead (600-Mil) Molded DIP	Commercial

Package Diagrams

28-Lead (600-Mil) CerDIP D16
MIL-STD-1835 D-10 Config. A

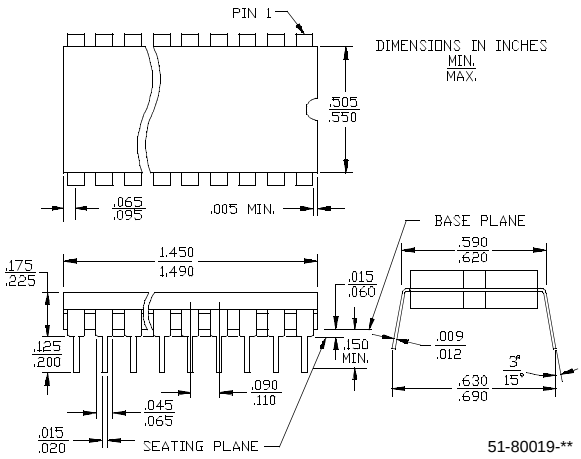

Package Diagrams (continued)

32-Pin Rectangular Leadless Chip Carrier L55

MIL-STD-1835 C-12

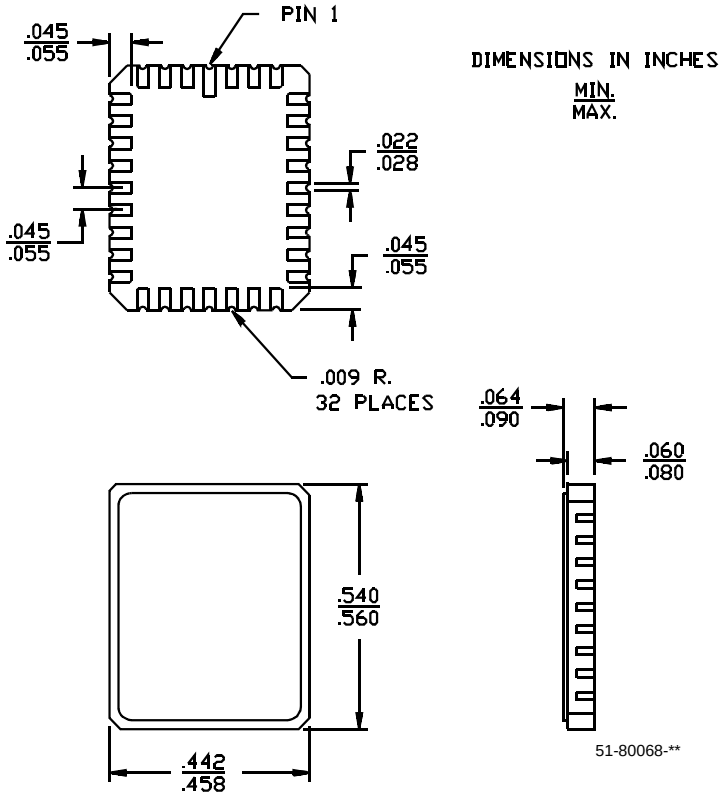

51-80068-**

28-Lead (600-Mil) Molded DIP P15

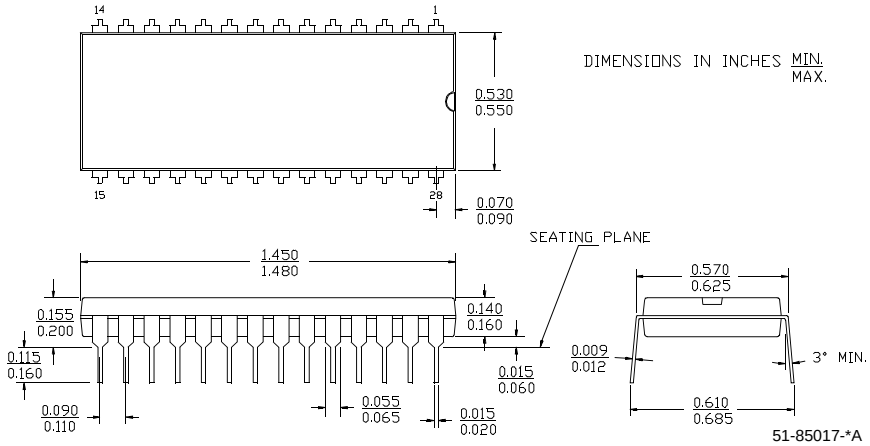

51-85017-*A

Package Diagrams (continued)

32-Pin Windowed Rectangular Leadless Chip Carrier Q55
MIL-STD-1835 C-12

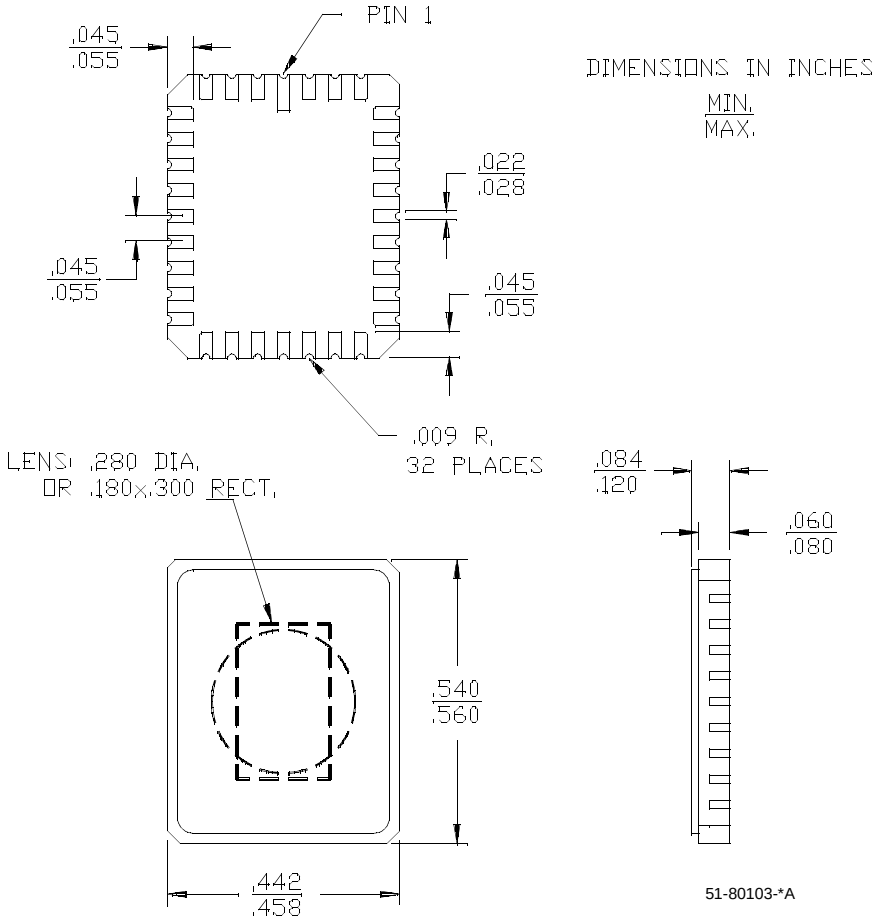

Package Diagrams (continued)

28-Lead (600-Mil) Windowed CerDIP W16
MIL-STD-1835 D-10 Config. A

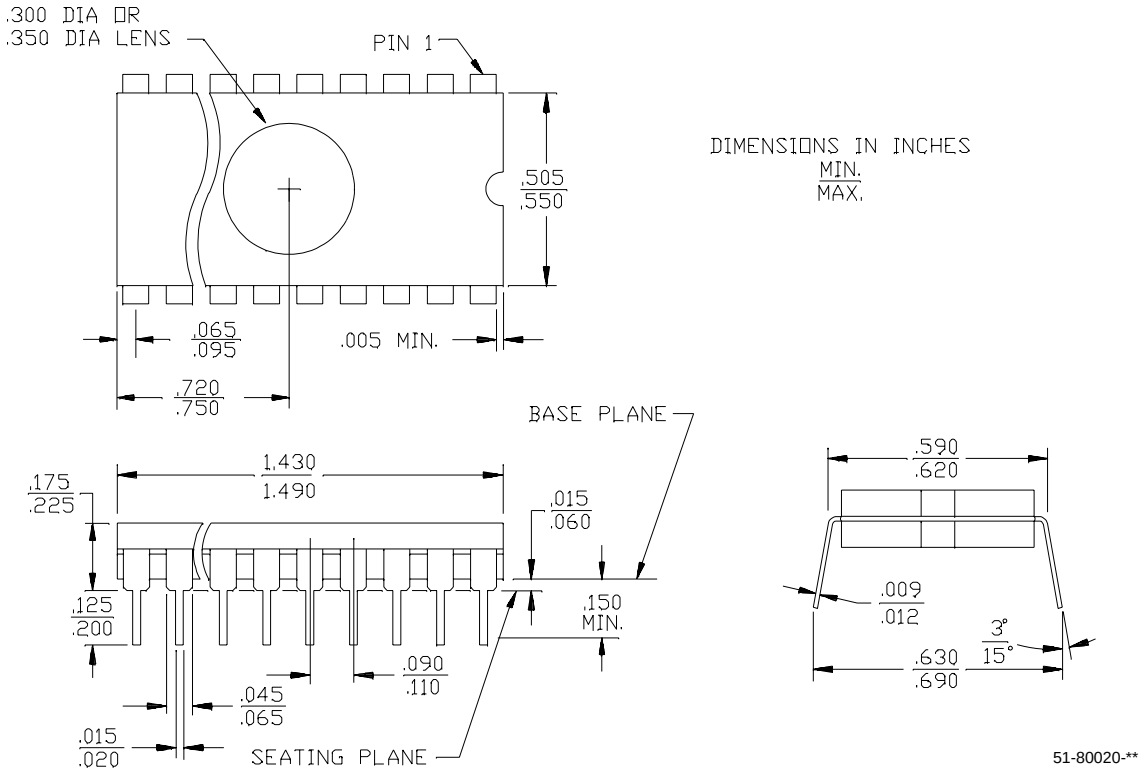

All product and company names mentioned in this document may be the trademarks of their respective holders.

© Cypress Semiconductor Corporation, 2002. The information contained herein is subject to change without notice. Cypress Semiconductor Corporation assumes no responsibility for the use of any circuitry other than circuitry embodied in a Cypress Semiconductor product. Nor does it convey or imply any license under patent or other rights. Cypress Semiconductor does not authorize its products for use as critical components in life-support systems where a malfunction or failure may reasonably be expected to result in significant injury to the user. The inclusion of Cypress Semiconductor products in life-support systems application implies that the manufacturer assumes all risk of such use and in doing so indemnifies Cypress Semiconductor against all charges.

Document History Page

Document Title: CY7C266 8K x 8 Power Switched and Reprogrammable PROM Document Number: 38-04005				
REV.	**ECN NO.**	**Issue Date**	**Orig. of Change**	**Description of Change**
**	113861	03/08/02	DSG	Change from Spec number: 38-00086 to 38-04005
*A	118897	10/09/02	GBI	Update ordering information
*B	122246	12/27/02	RBI	Add power up requirements to Operating Conditions information