CY7C1354CV25
CY7C1356CV25

9-Mbit (256 K × 36/512 K × 18) Pipelined SRAM with NoBL™ Architecture

Features

- Pin-compatible with and functionally equivalent to ZBT™
- Supports 250-MHz bus operations with zero wait states
- Available speed grades are 250, 200, and 166 MHz
- Internally self-timed output buffer control to eliminate the need to use asynchronous $\overline{OE}$
- Fully registered (inputs and outputs) for pipelined operation
- Byte write capability
- Single 2.5 V power supply (V_{DD})
- Fast clock-to-output times
  - 2.8 ns (for 250-MHz device)
- Clock enable ($\overline{CEN}$) pin to suspend operation
- Synchronous self-timed writes
- Available in Pb-free 100-pin TQFP package, Pb-free and non Pb-free 119-ball BGA package and 165-ball FBGA package
- IEEE 1149.1 JTAG-compatible boundary scan
- Burst capability–linear or interleaved burst order
- "ZZ" sleep mode option and stop clock option

Functional Description

The CY7C1354CV25/CY7C1356CV25[1] are 2.5 V, 256 K × 36/512 K × 18 synchronous pipelined burst SRAMs with No Bus Latency™ (NoBL™) logic, respectively. They are designed to support unlimited true back-to-back read/write operations with no wait states. The CY7C1354CV25/CY7C1356CV25 are equipped with the advanced (NoBL) logic required to enable consecutive read/write operations with data being transferred on every clock cycle. This feature dramatically improves the throughput of data in systems that require frequent write/read transitions. The CY7C1354CV25/CY7C1356CV25 are pin-compatible with and functionally equivalent to ZBT devices.

All synchronous inputs pass through input registers controlled by the rising edge of the clock. All data outputs pass through output registers controlled by the rising edge of the clock. The clock input is qualified by the clock enable ($\overline{CEN}$) signal, which when deasserted suspends operation and extends the previous clock cycle.

Write operations are controlled by the byte write selects ($\overline{BW_a}$–$\overline{BW_d}$ for CY7C1354CV25 and $\overline{BW_a}$–$\overline{BW_b}$ for CY7C1356CV25) and a write enable ($\overline{WE}$) input. All writes are conducted with on-chip synchronous self-timed write circuitry.

Three synchronous chip enables ($\overline{CE_1}$, CE_2, $\overline{CE_3}$) and an asynchronous output enable ($\overline{OE}$) provide for easy bank selection and output tri-state control. In order to avoid bus contention, the output drivers are synchronously tri-stated during the data portion of a write sequence.

Logic Block Diagram – CY7C1354CV25

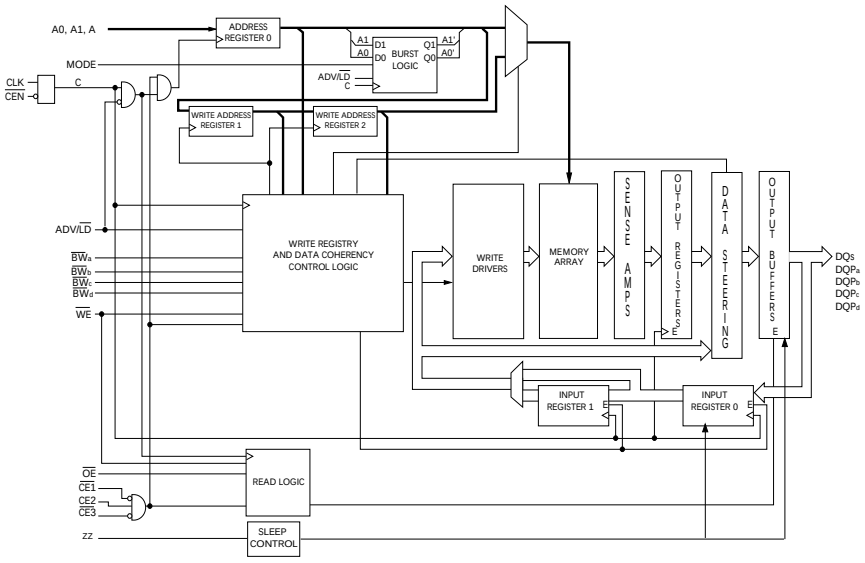

Note
1. For best-practices recommendations, please refer to the Cypress application note *System Design Guidelines* on www.cypress.com.

Logic Block Diagram – CY7C1356CV25

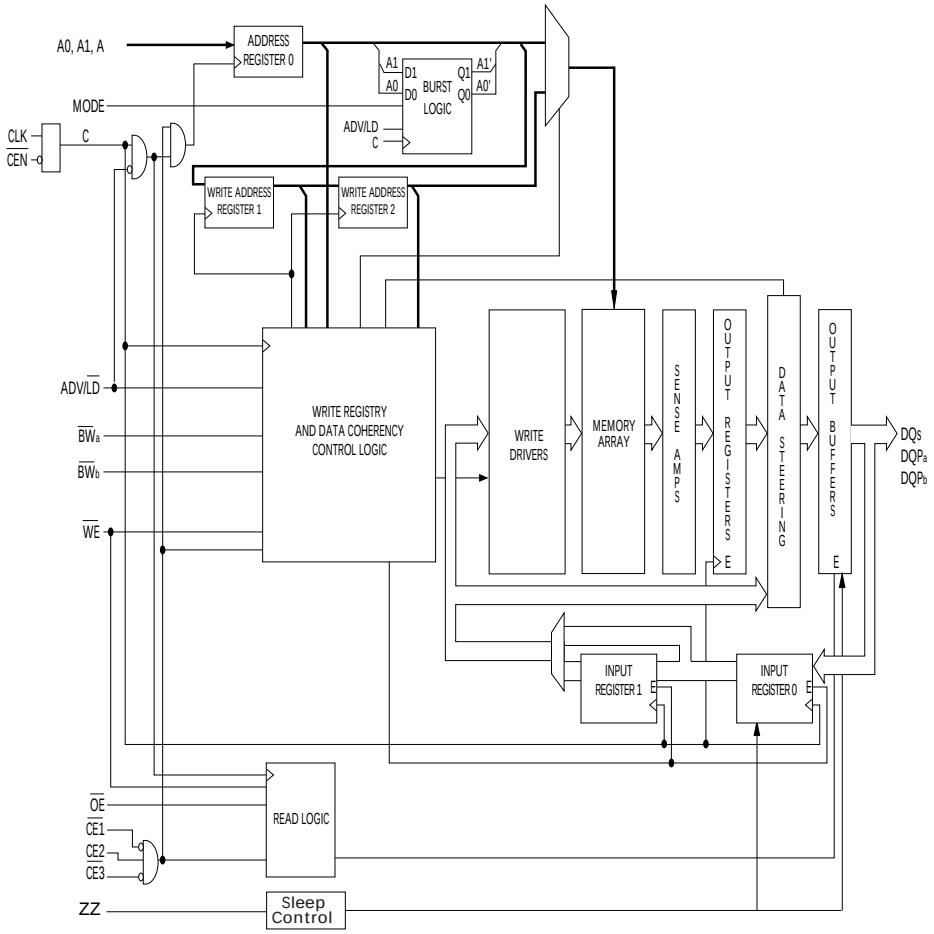

Contents

Selection Guide **4**
Pin Configurations **4**
Pin Definitions **7**
Functional Overview **8**
Single Read Accesses 8
Burst Read Accesses 8
Single Write Accesses 8
Burst Write Accesses 9
Sleep Mode 9
Interleaved Burst Address Table 9
Linear Burst Address Table 9
ZZ Mode Electrical Characteristics 9
Truth Table **10**
Partial Truth Table for Read/Write **11**
Partial Truth Table for Read/Write **11**
IEEE 1149.1 Serial Boundary Scan (JTAG) **12**
Disabling the JTAG Feature 12
Test Access Port (TAP) 12
PERFORMING A TAP RESET 12
TAP REGISTERS 12
TAP Instruction Set 13
TAP Controller State Diagram **14**
TAP Controller Block Diagram **15**
TAP Timing **15**
TAP AC Switching Characteristics **16**
2.5 V TAP AC Test Conditions **16**
2.5 V TAP AC Output Load Equivalent **16**
TAP DC Electrical Characteristics and Operating Conditions **17**
Identification Register Definitions **17**
Scan Register Sizes **17**
Instruction Codes **17**
Boundary Scan Exit Order **18**
Boundary Scan Exit Order **19**
Maximum Ratings **20**
Operating Range **20**
Electrical Characteristics **20**
Capacitance **21**
Thermal Resistance **21**
AC Test Loads and Waveforms **21**
Switching Characteristics **22**
Switching Waveforms **23**
Ordering Information **26**
Ordering Code Definitions 26
Package Diagrams **27**
Acronyms **30**
Document Conventions **30**
Units of Measure 30
Document History Page **31**
Sales, Solutions, and Legal Information **33**
Worldwide Sales and Design Support 33
Products 33
PSoC Solutions 33

Selection Guide

Description	250 MHz	200 MHz	166 MHz	Unit
Maximum access time	2.8	3.2	3.5	ns
Maximum operating current	250	220	180	mA
Maximum CMOS standby current	40	40	40	mA

Pin Configurations

Figure 1. 100-pin TQFP (14 × 20 × 1.4 mm) pinout

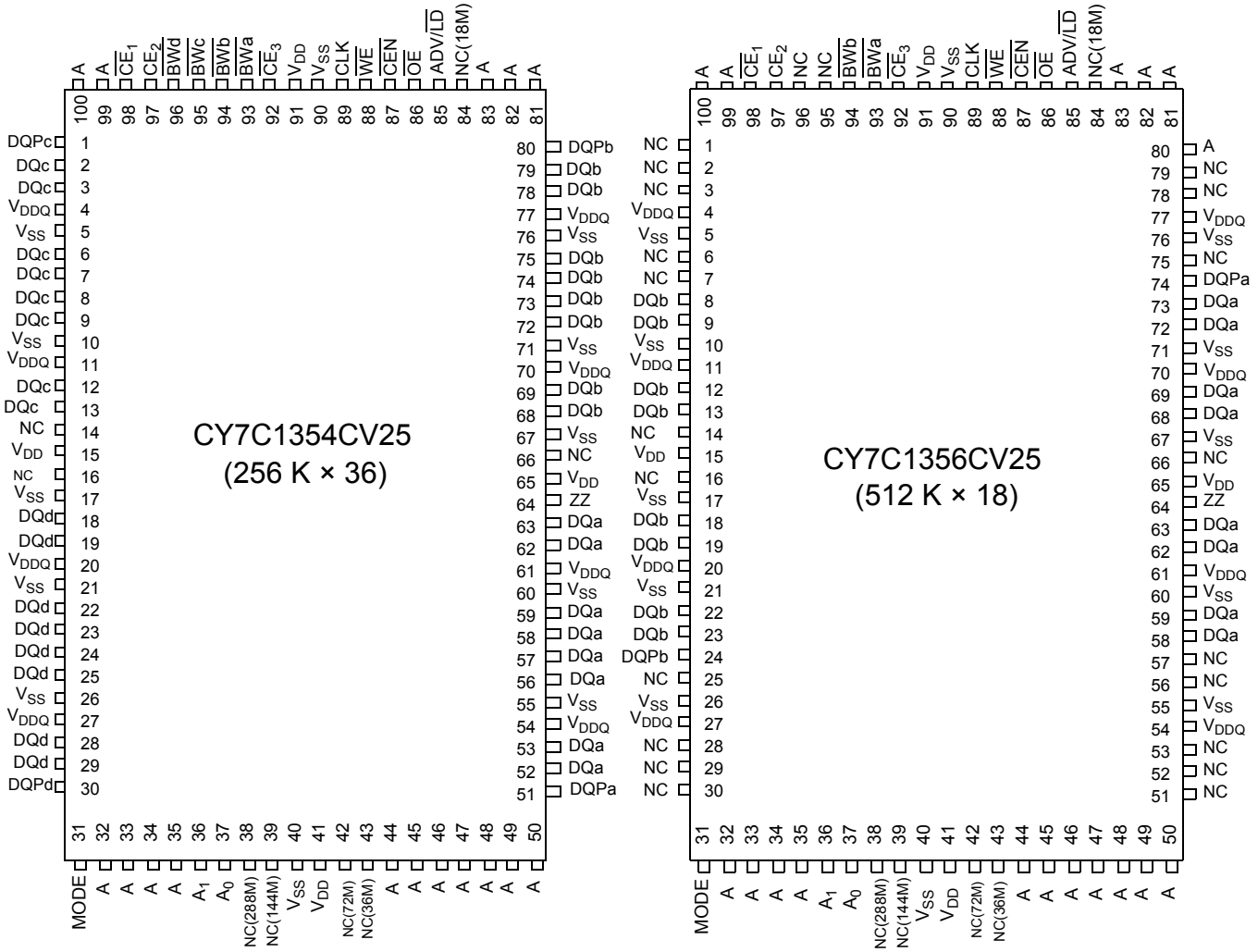

Pin Configurations *(continued)*

Figure 2. 119-ball BGA (14 × 22 × 2.4 mm) Pinout

CY7C1354CV25 (256 K × 36)

	1	2	3	4	5	6	7
A	V_{DDQ}	A	A	NC/18M	A	A	V_{DDQ}
B	NC/576M	CE_2	A	ADV/$\overline{LD}$	A	$\overline{CE_3}$	NC
C	NC/1G	A	A	V_{DD}	A	A	NC
D	DQ_c	DQP_c	V_{SS}	NC	V_{SS}	DQP_b	DQ_b
E	DQ_c	DQ_c	V_{SS}	$\overline{CE_1}$	V_{SS}	DQ_b	DQ_b
F	V_{DDQ}	DQ_c	V_{SS}	$\overline{OE}$	V_{SS}	DQ_b	V_{DDQ}
G	DQ_c	DQ_c	$\overline{BW_c}$	A	$\overline{BW_b}$	DQ_b	DQ_b
H	DQ_c	DQ_c	V_{SS}	$\overline{WE}$	V_{SS}	DQ_b	DQ_b
J	V_{DDQ}	V_{DD}	NC	V_{DD}	NC	V_{DD}	V_{DDQ}
K	DQ_d	DQ_d	V_{SS}	CLK	V_{SS}	DQ_a	DQ_a
L	DQ_d	DQ_d	$\overline{BW_d}$	NC	$\overline{BW_a}$	DQ_a	DQ_a
M	V_{DDQ}	DQ_d	V_{SS}	$\overline{CEN}$	V_{SS}	DQ_a	V_{DDQ}
N	DQ_d	DQ_d	V_{SS}	A1	V_{SS}	DQ_a	DQ_a
P	DQ_d	DQP_d	V_{SS}	A0	V_{SS}	DQP_a	DQ_a
R	NC/144M	A	MODE	V_{DD}	NC	A	NC/288M
T	NC	NC/72M	A	A	A	NC/36M	$\overline{ZZ}$
U	V_{DDQ}	TMS	TDI	TCK	TDO	NC	V_{DDQ}

CY7C1356CV25 (512 K × 18)

	1	2	3	4	5	6	7
A	V_{DDQ}	A	A	NC/18M	A	A	V_{DDQ}
B	NC/576M	CE_2	A	ADV/$\overline{LD}$	A	$\overline{CE_3}$	NC
C	NC/1G	A	A	V_{DD}	A	A	NC
D	DQ_b	NC	V_{SS}	NC	V_{SS}	DQP_a	NC
E	NC	DQ_b	V_{SS}	$\overline{CE_1}$	V_{SS}	NC	DQ_a
F	V_{DDQ}	NC	V_{SS}	$\overline{OE}$	V_{SS}	DQ_a	V_{DDQ}
G	NC	DQ_b	$\overline{BW_b}$	A	V_{SS}	NC	DQ_a
H	DQ_b	NC	V_{SS}	$\overline{WE}$	V_{SS}	DQ_a	NC
J	V_{DDQ}	V_{DD}	NC	V_{DD}	NC	V_{DD}	V_{DDQ}
K	NC	DQ_b	V_{SS}	CLK	V_{SS}	NC	DQ_a
L	DQ_b	NC	V_{SS}	NC	$\overline{BW_a}$	DQ_a	NC
M	V_{DDQ}	DQ_b	V_{SS}	$\overline{CEN}$	V_{SS}	NC	V_{DDQ}
N	DQ_b	NC	V_{SS}	A1	V_{SS}	DQ_a	NC
P	NC	DQP_b	V_{SS}	A0	V_{SS}	NC	DQ_a
R	NC/144M	A	MODE	V_{DD}	NC	A	NC/288M
T	NC/72M	A	A	NC/36M	A	A	$\overline{ZZ}$
U	V_{DDQ}	TMS	TDI	TCK	TDO	NC	V_{DDQ}

Pin Configurations *(continued)*

Figure 3. 165-ball FBGA (13 × 15 × 1.4 mm) Pinout

CY7C1354CV25 (256 K × 36)

	1	2	3	4	5	6	7	8	9	10	11
A	NC/576M	A	$\overline{CE}_1$	$\overline{BW}_c$	$\overline{BW}_b$	$\overline{CE}_3$	$\overline{CEN}$	ADV/$\overline{LD}$	A	A	NC
B	NC/1G	A	CE2	$\overline{BW}_d$	$\overline{BW}_a$	CLK	$\overline{WE}$	$\overline{OE}$	NC/18M	A	NC
C	DQP_c	NC	V_{DDQ}	V_{SS}	V_{SS}	V_{SS}	V_{SS}	V_{SS}	V_{DDQ}	NC	DQP_b
D	DQ_c	DQ_c	V_{DDQ}	V_{DD}	V_{SS}	V_{SS}	V_{SS}	V_{DD}	V_{DDQ}	DQ_b	DQ_b
E	DQ_c	DQ_c	V_{DDQ}	V_{DD}	V_{SS}	V_{SS}	V_{SS}	V_{DD}	V_{DDQ}	DQ_b	DQ_b
F	DQ_c	DQ_c	V_{DDQ}	V_{DD}	V_{SS}	V_{SS}	V_{SS}	V_{DD}	V_{DDQ}	DQ_b	DQ_b
G	DQ_c	DQ_c	V_{DDQ}	V_{DD}	V_{SS}	V_{SS}	V_{SS}	V_{DD}	V_{DDQ}	DQ_b	DQ_b
H	NC	NC	NC	V_{DD}	V_{SS}	V_{SS}	V_{SS}	V_{DD}	NC	NC	ZZ
J	DQ_d	DQ_d	V_{DDQ}	V_{DD}	V_{SS}	V_{SS}	V_{SS}	V_{DD}	V_{DDQ}	DQ_a	DQ_a
K	DQ_d	DQ_d	V_{DDQ}	V_{DD}	V_{SS}	V_{SS}	V_{SS}	V_{DD}	V_{DDQ}	DQ_a	DQ_a
L	DQ_d	DQ_d	V_{DDQ}	V_{DD}	V_{SS}	V_{SS}	V_{SS}	V_{DD}	V_{DDQ}	DQ_a	DQ_a
M	DQ_d	DQ_d	V_{DDQ}	V_{DD}	V_{SS}	V_{SS}	V_{SS}	V_{DD}	V_{DDQ}	DQ_a	DQ_a
N	DQP_d	NC	V_{DDQ}	V_{SS}	NC	NC	NC	V_{SS}	V_{DDQ}	NC	DQP_a
P	NC/144M	NC/72M	A	A	TDI	A1	TDO	A	A	A	NC/288M
R	MODE	NC/36M	A	A	TMS	A0	TCK	A	A	A	A

CY7C1356CV25 (512 K × 18)

	1	2	3	4	5	6	7	8	9	10	11
A	NC/576M	A	$\overline{CE}_1$	$\overline{BW}_b$	NC	$\overline{CE}_3$	$\overline{CEN}$	ADV/$\overline{LD}$	A	A	A
B	NC/1G	A	CE2	NC	$\overline{BW}_a$	CLK	$\overline{WE}$	$\overline{OE}$	NC/18M	A	NC
C	NC	NC	V_{DDQ}	V_{SS}	V_{SS}	V_{SS}	V_{SS}	V_{SS}	V_{DDQ}	NC	DQP_a
D	NC	DQ_b	V_{DDQ}	V_{DD}	V_{SS}	V_{SS}	V_{SS}	V_{DD}	V_{DDQ}	NC	DQ_a
E	NC	DQ_b	V_{DDQ}	V_{DD}	V_{SS}	V_{SS}	V_{SS}	V_{DD}	V_{DDQ}	NC	DQ_a
F	NC	DQ_b	V_{DDQ}	V_{DD}	V_{SS}	V_{SS}	V_{SS}	V_{DD}	V_{DDQ}	NC	DQ_a
G	NC	DQ_b	V_{DDQ}	V_{DD}	V_{SS}	V_{SS}	V_{SS}	V_{DD}	V_{DDQ}	NC	DQ_a
H	NC	NC	NC	V_{DD}	V_{SS}	V_{SS}	V_{SS}	V_{DD}	NC	NC	ZZ
J	DQ_b	NC	V_{DDQ}	V_{DD}	V_{SS}	V_{SS}	V_{SS}	V_{DD}	V_{DDQ}	DQ_a	NC
K	DQ_b	NC	V_{DDQ}	V_{DD}	V_{SS}	V_{SS}	V_{SS}	V_{DD}	V_{DDQ}	DQ_a	NC
L	DQ_b	NC	V_{DDQ}	V_{DD}	V_{SS}	V_{SS}	V_{SS}	V_{DD}	V_{DDQ}	DQ_a	NC
M	DQ_b	NC	V_{DDQ}	V_{DD}	V_{SS}	V_{SS}	V_{SS}	V_{DD}	V_{DDQ}	DQ_a	NC
N	DQP_b	NC	V_{DDQ}	V_{SS}	NC	NC	NC	V_{SS}	V_{DDQ}	NC	NC
P	NC/144M	NC/72M	A	A	TDI	A1	TDO	A	A	A	NC/288M
R	MODE	NC/36M	A	A	TMS	A0	TCK	A	A	A	A

Pin Definitions

Pin Name	I/O Type	Pin Description
A_0, A_1, A	Input-synchronous	**Address inputs used to select one of the address locations**. Sampled at the rising edge of the CLK.
$\overline{BW}_a$, $\overline{BW}_b$, $\overline{BW}_c$, $\overline{BW}_d$	Input-synchronous	**Byte write select inputs, active LOW**. Qualified with $\overline{WE}$ to conduct writes to the SRAM. Sampled on the rising edge of CLK. $\overline{BW}_a$ controls DQ_a and DQP_a, $\overline{BW}_b$ controls DQ_b and DQP_b, $\overline{BW}_c$ controls DQ_c and DQP_c, $\overline{BW}_d$ controls DQ_d and DQP_d.
$\overline{WE}$	Input-synchronous	**Write enable input, active LOW**. Sampled on the rising edge of CLK if $\overline{CEN}$ is active LOW. This signal must be asserted LOW to initiate a write sequence.
ADV/$\overline{LD}$	Input-synchronous	**Advance/load input used to advance the on-chip address counter or load a new address**. When HIGH (and $\overline{CEN}$ is asserted LOW) the internal burst counter is advanced. When LOW, a new address can be loaded into the device for an access. After being deselected, ADV/$\overline{LD}$ should be driven LOW in order to load a new address.
CLK	Input-clock	**Clock input**. Used to capture all synchronous inputs to the device. CLK is qualified with $\overline{CEN}$. CLK is only recognized if $\overline{CEN}$ is active LOW.
$\overline{CE}_1$	Input-synchronous	**Chip enable 1 input, active LOW**. Sampled on the rising edge of CLK. Used in conjunction with CE_2 and $\overline{CE}_3$ to select/deselect the device.
CE_2	Input-synchronous	**Chip enable 2 input, active HIGH**. Sampled on the rising edge of CLK. Used in conjunction with $\overline{CE}_1$ and $\overline{CE}_3$ to select/deselect the device.
$\overline{CE}_3$	Input-synchronous	**Chip enable 3 Input, active LOW**. Sampled on the rising edge of CLK. Used in conjunction with $\overline{CE}_1$ and CE_2 to select/deselect the device.
$\overline{OE}$	Input-asynchronous	**Output enable, active LOW**. Combined with the synchronous logic block inside the device to control the direction of the I/O pins. When LOW, the I/O pins are allowed to behave as outputs. When deasserted HIGH, I/O pins are tri-stated, and act as input data pins. $\overline{OE}$ is masked during the data portion of a write sequence, during the first clock when emerging from a deselected state and when the device has been deselected.
$\overline{CEN}$	Input-synchronous	**Clock enable input, active LOW**. When asserted LOW the clock signal is recognized by the SRAM. When deasserted HIGH the clock signal is masked. Since deasserting $\overline{CEN}$ does not deselect the device, $\overline{CEN}$ can be used to extend the previous cycle when required.
DQ_S	I/O-synchronous	**Bidirectional data I/O lines**. As inputs, they feed into an on-chip data register that is triggered by the rising edge of CLK. As outputs, they deliver the data contained in the memory location specified by addresses during the previous clock rise of the read cycle. The direction of the pins is controlled by $\overline{OE}$ and the internal control logic. When $\overline{OE}$ is asserted LOW, the pins can behave as outputs. When HIGH, DQ_a–DQ_d are placed in a tri-state condition. The outputs are automatically tri-stated during the data portion of a write sequence, during the first clock when emerging from a deselected state, and when the device is deselected, regardless of the state of $\overline{OE}$.
DQP_X	I/O-synchronous	**Bidirectional data parity I/O lines**. Functionally, these signals are identical to $DQ_{[a:d]}$. During write sequences, DQP_a is controlled by $\overline{BW}_a$, DQP_b is controlled by $\overline{BW}_b$, DQP_c is controlled by $\overline{BW}_c$, and DQP_d is controlled by $\overline{BW}_d$.
MODE	Input strap pin	**Mode input**. Selects the burst order of the device. Tied HIGH selects the interleaved burst order. Pulled LOW selects the linear burst order. MODE should not change states during operation. When left floating MODE will default HIGH, to an interleaved burst order.
TDO	JTAG serial output synchronous	**Serial data-out to the JTAG circuit**. Delivers data on the negative edge of TCK.
TDI	JTAG serial input synchronous	**Serial data-in to the JTAG circuit**. Sampled on the rising edge of TCK.
TMS	Test mode select synchronous	**This pin controls the test access port state machine**. Sampled on the rising edge of TCK.
TCK	JTAG-clock	**Clock input to the JTAG circuitry**.

Pin Definitions *(continued)*

Pin Name	I/O Type	Pin Description
V_{DD}	Power supply	**Power supply inputs to the core of the device**.
V_{DDQ}	I/O power supply	**Power supply for the I/O circuitry**.
V_{SS}	Ground	**Ground for the device**. Should be connected to ground of the system.
NC	–	**No connects**. This pin is not connected to the die.
NC/18M, NC/36M, NC/72M, NC/144M, NC/288M, NC/576M, NC/1G	–	**These pins are not connected**. They will be used for expansion to the 18M, 36M, 72M, 144M 288M, 576M, and 1G densities.
ZZ	Input-asynchronous	**ZZ "sleep" Input**. This active HIGH input places the device in a non-time critical "sleep" condition with data integrity preserved. For normal operation, this pin has to be LOW or left floating. ZZ pin has an internal pull-down.

Functional Overview

The CY7C1354CV25/CY7C1356CV25 are synchronous-pipelined burst NoBL SRAMs designed specifically to eliminate wait states during write/read transitions. All synchronous inputs pass through input registers controlled by the rising edge of the clock. The clock signal is qualified with the clock enable input signal ($\overline{CEN}$). If $\overline{CEN}$ is HIGH, the clock signal is not recognized and all internal states are maintained. All synchronous operations are qualified with $\overline{CEN}$. All data outputs pass through output registers controlled by the rising edge of the clock. Maximum access delay from the clock rise (t_{CO}) is 2.8 ns (250-MHz device).

Accesses can be initiated by asserting all three chip enables ($\overline{CE_1}$, CE_2, $\overline{CE_3}$) active at the rising edge of the clock. If clock enable ($\overline{CEN}$) is active LOW and ADV/$\overline{LD}$ is asserted LOW, the address presented to the device will be latched. The access can either be a read or write operation, depending on the status of the write enable ($\overline{WE}$). $\overline{BW}_{[d:a]}$ can be used to conduct byte write operations.

Write operations are qualified by the write enable ($\overline{WE}$). All writes are simplified with on-chip synchronous self-timed write circuitry.

Three synchronous chip enables ($\overline{CE_1}$, CE_2, $\overline{CE_3}$) and an asynchronous output enable ($\overline{OE}$) simplify depth expansion. All operations (reads, writes, and deselects) are pipelined. ADV/$\overline{LD}$ should be driven LOW once the device has been deselected in order to load a new address for the next operation.

Single Read Accesses

A read access is initiated when the following conditions are satisfied at clock rise: (1) $\overline{CEN}$ is asserted LOW, (2) $\overline{CE_1}$, CE_2, and $\overline{CE_3}$ are all asserted active, (3) the write enable input signal $\overline{WE}$ is deasserted HIGH, and (4) ADV/$\overline{LD}$ is asserted LOW. The address presented to the address inputs is latched into the address register and presented to the memory core and control logic. The control logic determines that a read access is in progress and allows the requested data to propagate to the input of the output register. At the rising edge of the next clock the requested data is allowed to propagate through the output register and onto the data bus within 2.8 ns (250-MHz device) provided $\overline{OE}$ is active LOW. After the first clock of the read access the output buffers are controlled by $\overline{OE}$ and the internal control logic. $\overline{OE}$ must be driven LOW in order for the device to drive out the requested data. During the second clock, a subsequent operation (read/write/deselect) can be initiated. Deselecting the device is also pipelined. Therefore, when the SRAM is deselected at clock rise by one of the chip enable signals, its output will tri-state following the next clock rise.

Burst Read Accesses

The CY7C1354CV25/CY7C1356CV25 have an on-chip burst counter that allows the user the ability to supply a single address and conduct up to four reads without reasserting the address inputs. ADV/$\overline{LD}$ must be driven LOW in order to load a new address into the SRAM, as described in Single Read Accesses. The sequence of the burst counter is determined by the MODE input signal. A LOW input on MODE selects a linear burst mode, a HIGH selects an interleaved burst sequence. Both burst counters use A0 and A1 in the burst sequence, and will wrap around when incremented sufficiently. A HIGH input on ADV/$\overline{LD}$ will increment the internal burst counter regardless of the state of chip enables inputs or $\overline{WE}$. $\overline{WE}$ is latched at the beginning of a burst cycle. Therefore, the type of access (read or write) is maintained throughout the burst sequence.

Single Write Accesses

Write access are initiated when the following conditions are satisfied at clock rise: (1) $\overline{CEN}$ is asserted LOW, (2) $\overline{CE_1}$, CE_2, and $\overline{CE_3}$ are all asserted active, and (3) the write signal $\overline{WE}$ is asserted LOW. The address presented to A_0–A_{16} is loaded into the address register. The write signals are latched into the control logic block.

On the subsequent clock rise the data lines are automatically tri-stated regardless of the state of the $\overline{OE}$ input signal. This allows the external logic to present the data on DQ and DQP ($DQ_{a,b,c,d}$/$DQP_{a,b,c,d}$ for CY7C1354CV25 and $DQ_{a,b}$/$DQP_{a,b}$ for CY7C1356CV25). In addition, the address for the subsequent access (read/write/deselect) is latched into the address register (provided the appropriate control signals are asserted).

On the next clock rise the data presented to DQ and DQP ($DQ_{a,b,c,d}$/$DQP_{a,b,c,d}$ for CY7C1354CV25 and $DQ_{a,b}$/$DQP_{a,b}$ for CY7C1356CV25) (or a subset for byte write operations, see Write Cycle Description table for details) inputs is latched into the device and the Write is complete.

The data written during the write operation is controlled by $\overline{BW}$ ($\overline{BW}_{a,b,c,d}$ for CY7C1354CV25 and $\overline{BW}_{a,b}$ for CY7C1356CV25) signals. The CY7C1354CV25/CY7C1356CV25 provides byte write capability that is described in the Write Cycle Description table. Asserting the write enable input ($\overline{WE}$) with the selected byte write select ($\overline{BW}$) input will selectively write to only the desired bytes. Bytes not selected during a byte write operation will remain unaltered. A synchronous self-timed write mechanism has been provided to simplify the write operations. Byte write capability has been included in order to greatly simplify read/modify/write sequences, which can be reduced to simple byte write operations.

Because the CY7C1354CV25/CY7C1356CV25 are common I/O devices, data should not be driven into the device while the outputs are active. The output enable ($\overline{OE}$) can be deasserted HIGH before presenting data to the DQ and DQP ($DQ_{a,b,c,d}$/$DQP_{a,b,c,d}$ for CY7C1354CV25 and $DQ_{a,b}$/$DQP_{a,b}$ for CY7C1356CV25) inputs. Doing so will tri-state the output drivers. As a safety precaution, DQ and DQP ($DQ_{a,b,c,d}$/$DQP_{a,b,c,d}$ for CY7C1354CV25 and $DQ_{a,b}$/$DQP_{a,b}$ for CY7C1356CV25) are automatically tri-stated during the data portion of a write cycle, regardless of the state of $\overline{OE}$.

Burst Write Accesses

The CY7C1354CV25/CY7C1356CV25 has an on-chip burst counter that allows the user the ability to supply a single address and conduct up to four write operations without reasserting the address inputs. ADV/$\overline{LD}$ must be driven LOW in order to load the initial address, as described in Single Write Accesses. When ADV/$\overline{LD}$ is driven HIGH on the subsequent clock rise, the chip enables ($\overline{CE}_1$, CE_2, and $\overline{CE}_3$) and $\overline{WE}$ inputs are ignored and the burst counter is incremented. The correct BW ($\overline{BW}_{a,b,c,d}$ for CY7C1354CV25 and $\overline{BW}_{a,b}$ for CY7C1356CV25) inputs must be driven in each cycle of the burst write in order to write the correct bytes of data.

Sleep Mode

The ZZ input pin is an asynchronous input. Asserting ZZ places the SRAM in a power conservation “sleep” mode. Two clock cycles are required to enter into or exit from this “sleep” mode. While in this mode, data integrity is guaranteed. Accesses pending when entering the “sleep” mode are not considered valid nor is the completion of the operation guaranteed. The device must be deselected prior to entering the “sleep” mode. $\overline{CE}_1$, CE_2, and $\overline{CE}_3$, must remain inactive for the duration of t_{ZZREC} after the ZZ input returns LOW.

Interleaved Burst Address Table

(MODE = Floating or V_{DD})

First Address A_1, A_0	Second Address A_1, A_0	Third Address A_1, A_0	Fourth Address A_1, A_0
00	01	10	11
01	00	11	10
10	11	00	01
11	10	01	00

Linear Burst Address Table

(MODE = GND)

First Address A_1, A_0	Second Address A_1, A_0	Third Address A_1, A_0	Fourth Address A_1, A_0
00	01	10	11
01	10	11	00
10	11	00	01
11	00	01	10

ZZ Mode Electrical Characteristics

Parameter	Description	Test Conditions	Min	Max	Unit
I_{DDZZ}	Sleep mode standby current	ZZ ≥ V_{DD} − 0.2 V	–	50	mA
t_{ZZS}	Device operation to ZZ	ZZ ≥ V_{DD} − 0.2 V	–	$2t_{CYC}$	ns
t_{ZZREC}	ZZ recovery time	ZZ ≤ 0.2 V	$2t_{CYC}$	–	ns
t_{ZZI}	ZZ active to sleep current	This parameter is sampled	–	$2t_{CYC}$	ns
t_{RZZI}	ZZ Inactive to exit sleep current	This parameter is sampled	0	–	ns

Truth Table

The truth table for CY7C1354CV25/CY7C1356CV25 follows. [2, 3, 4, 5, 6, 7, 8]

Operation	Address used	$\overline{CE}$	ZZ	$\overline{ADV/LD}$	$\overline{WE}$	$\overline{BW_X}$	$\overline{OE}$	$\overline{CEN}$	CLK	DQ
Deselect cycle	None	H	L	L	X	X	X	L	L–H	Tri-state
Continue deselect cycle	None	X	L	H	X	X	X	L	L–H	Tri-state
Read cycle (begin burst)	External	L	L	L	H	X	L	L	L–H	Data out (Q)
Read cycle (continue burst)	Next	X	L	H	X	X	L	L	L–H	Data out (Q)
NOP/dummy read (begin burst)	External	L	L	L	H	X	H	L	L–H	Tri-state
Dummy read (continue burst)	Next	X	L	H	X	X	H	L	L–H	Tri-state
Write cycle (begin burst)	External	L	L	L	L	L	X	L	L–H	Data in (D)
Write cycle (continue burst)	Next	X	L	H	X	L	X	L	L–H	Data in (D)
NOP/write abort (begin burst)	None	L	L	L	L	H	X	L	L–H	Tri-state
Write abort (continue burst)	Next	X	L	H	X	H	X	L	L–H	Tri-state
Ignore clock edge (stall)	Current	X	L	X	X	X	X	H	L–H	–
Sleep mode	None	X	H	X	X	X	X	X	X	Tri-state

Notes
2. X = “Don’t Care”, H = Logic HIGH, L = Logic LOW, $\overline{CE}$ stands for all chip enables active. $\overline{BW}$x = L signifies at least one byte write select is active, $\overline{BW}$x = Valid signifies that the desired byte write selects are asserted, see Write Cycle Description table for details.
3. Write is defined by $\overline{WE}$ and $\overline{BW_X}$. See Write Cycle Description table for details.
4. When a write cycle is detected, all I/Os are tri-stated, even during byte writes.
5. The DQ and DQP pins are controlled by the current cycle and the $\overline{OE}$ signal.
6. $\overline{CEN}$ = H inserts wait states.
7. Device will power-up deselected and the I/Os in a tri-state condition, regardless of $\overline{OE}$.
8. $\overline{OE}$ is asynchronous and is not sampled with the clock rise. It is masked internally during write cycles. During a read cycle DQs and DQP_X = tri-state when $\overline{OE}$ is inactive or when the device is deselected, and DQs = data when $\overline{OE}$ is active.

Partial Truth Table for Read/Write

The partial truth table for Read/Write for CY7C1354CV25 follows. [9, 10, 11, 12]

Function (CY7C1354CV25)	$\overline{WE}$	$\overline{BW_d}$	$\overline{BW_c}$	$\overline{BW_b}$	$\overline{BW_a}$
Read	H	X	X	X	X
Write – no bytes written	L	H	H	H	H
Write byte a– (DQ_a and DQP_a)	L	H	H	H	L
Write byte b – (DQ_b and DQP_b)	L	H	H	L	H
Write bytes b, a	L	H	H	L	L
Write byte c – (DQ_c and DQP_c)	L	H	L	H	H
Write bytes c, a	L	H	L	H	L
Write bytes c, b	L	H	L	L	H
Write bytes c, b, a	L	H	L	L	L
Write byte d – (DQ_d and DQP_d)	L	L	H	H	H
Write bytes d, a	L	L	H	H	L
Write bytes d, b	L	L	H	L	H
Write bytes d, b, a	L	L	H	L	L
Write bytes d, c	L	L	L	H	H
Write bytes d, c, a	L	L	L	H	L
Write bytes d, c, b	L	L	L	L	H
Write all bytes	L	L	L	L	L

Partial Truth Table for Read/Write

The partial truth table for Read/Write for CY7C1356CV25 follows. [9, 10, 11, 12]

Function (CY7C1356CV25)	$\overline{WE}$	$\overline{BW_b}$	$\overline{BW_a}$
Read	H	x	x
Write – no bytes written	L	H	H
Write byte a – (DQ_a and DQP_a)	L	H	L
Write byte b – (DQ_b and DQP_b)	L	L	H
Write both bytes	L	L	L

Notes
9. X = “Don’t Care”, H = Logic HIGH, L = Logic LOW, $\overline{CE}$ stands for all chip enables active. $\overline{BW}$x = L signifies at least one byte write select is active, $\overline{BW}$x = valid signifies that the desired byte write selects are asserted, see Write Cycle Description table for details.
10. Write is defined by $\overline{WE}$ and $\overline{BW}_X$. See Write Cycle Description table for details.
11. When a write cycle is detected, all I/Os are tri-stated, even during byte writes.
12. Table only lists a partial listing of the byte write combinations. Any combination of $\overline{BW}_X$ is valid. Appropriate write will be done based on which byte write is active.

IEEE 1149.1 Serial Boundary Scan (JTAG)

The CY7C1354CV25/CY7C1356CV25 incorporates a serial boundary scan test access port (TAP) in the BGA package only. The TQFP package does not offer this functionality. This part operates in accordance with IEEE Standard 1149.1-1900, but doesn't have the set of functions required for full 1149.1 compliance. These functions from the IEEE specification are excluded because their inclusion places an added delay in the critical speed path of the SRAM. Note the TAP controller functions in a manner that does not conflict with the operation of other devices using 1149.1 fully compliant TAPs. The TAP operates using JEDEC-standard 2.5 V I/O logic levels.

The CY7C1354CV25/CY7C1356CV25 contains a TAP controller, instruction register, boundary scan register, bypass register, and ID register.

Disabling the JTAG Feature

It is possible to operate the SRAM without using the JTAG feature. To disable the TAP controller, TCK must be tied LOW (V_{SS}) to prevent clocking of the device. TDI and TMS are internally pulled up and may be unconnected. They may alternately be connected to V_{DD} through a pull-up resistor. TDO should be left unconnected. Upon power-up, the device will come up in a reset state which will not interfere with the operation of the device.

Test Access Port (TAP)

Test Clock (TCK)

The test clock is used only with the TAP controller. All inputs are captured on the rising edge of TCK. All outputs are driven from the falling edge of TCK.

Test Mode Select (TMS)

The TMS input is used to give commands to the TAP controller and is sampled on the rising edge of TCK. It is allowable to leave this ball unconnected if the TAP is not used.

The ball is pulled up internally, resulting in a logic HIGH level.

Test Data-In (TDI)

The TDI ball is used to serially input information into the registers and can be connected to the input of any of the registers. The register between TDI and TDO is chosen by the instruction that is loaded into the TAP instruction register. For information on loading the instruction register, see TAP Controller State Diagram on page 14. TDI is internally pulled up and can be unconnected if the TAP is unused in an application. TDI is connected to the most significant bit (MSB) of any register.

Test Data-Out (TDO)

The TDO output ball is used to serially clock data-out from the registers. The output is active depending upon the current state of the TAP state machine (see Instruction Codes on page 17). The output changes on the falling edge of TCK. TDO is connected to the least significant bit (LSB) of any register.

Performing a TAP Reset

A RESET is performed by forcing TMS HIGH (V_{DD}) for five rising edges of TCK. This RESET does not affect the operation of the SRAM and may be performed while the SRAM is operating.

At power-up, the TAP is reset internally to ensure that TDO comes up in a high Z state.

TAP Registers

Registers are connected between the TDI and TDO balls and allow data to be scanned into and out of the SRAM test circuitry. Only one register can be selected at a time through the instruction register. Data is serially loaded into the TDI ball on the rising edge of TCK. Data is output on the TDO ball on the falling edge of TCK.

Instruction Register

Three-bit instructions can be serially loaded into the instruction register. This register is loaded when it is placed between the TDI and TDO balls as shown in the TAP Controller Block Diagram on page 15. Upon power-up, the instruction register is loaded with the IDCODE instruction.

It is also loaded with the IDCODE instruction if the controller is placed in a reset state as described in the previous section.

When the TAP controller is in the Capture-IR state, the two least significant bits are loaded with a binary "01" pattern to allow for fault isolation of the board-level serial test data path.

Bypass Register

To save time when serially shifting data through registers, it is sometimes advantageous to skip certain chips. The bypass register is a single-bit register that can be placed between the TDI and TDO balls. This allows data to be shifted through the SRAM with minimal delay. The bypass register is set LOW (V_{SS}) when the BYPASS instruction is executed.

Boundary Scan Register

The boundary scan register is connected to all the input and bidirectional balls on the SRAM.

The boundary scan register is loaded with the contents of the RAM I/O ring when the TAP controller is in the Capture-DR state and is then placed between the TDI and TDO balls when the controller is moved to the Shift-DR state. The EXTEST, SAMPLE/PRELOAD and SAMPLE Z instructions can be used to capture the contents of the I/O ring.

The Boundary Scan Exit Order on page 18 and Boundary Scan Exit Order on page 19 show the order in which the bits are connected. Each bit corresponds to one of the bumps on the SRAM package. The MSB of the register is connected to TDI, and the LSB is connected to TDO.

Identification (ID) Register

The ID register is loaded with a vendor-specific, 32-bit code during the Capture-DR state when the IDCODE command is loaded in the instruction register. The IDCODE is hardwired into the SRAM and can be shifted out when the TAP controller is in the Shift-DR state. The ID register has a vendor code and other information described in the Identification Register Definitions on page 17.

TAP Instruction Set

Overview

Eight different instructions are possible with the three bit instruction register. All combinations are listed in the Instruction Codes table. Three of these instructions are listed as RESERVED and should not be used. The other five instructions are described in detail below.

Instructions are loaded into the TAP controller during the Shift-IR state when the instruction register is placed between TDI and TDO. During this state, instructions are shifted through the instruction register through the TDI and TDO balls. To execute the instruction once it is shifted in, the TAP controller needs to be moved into the Update-IR state.

IDCODE

The IDCODE instruction causes a vendor-specific, 32-bit code to be loaded into the instruction register. It also places the instruction register between the TDI and TDO balls and allows the IDCODE to be shifted out of the device when the TAP controller enters the Shift-DR state.

The IDCODE instruction is loaded into the instruction register upon power-up or whenever the TAP controller is given a test logic reset state.

SAMPLE Z

The SAMPLE Z instruction causes the boundary scan register to be connected between the TDI and TDO pins when the TAP controller is in a Shift-DR state. The SAMPLE Z command puts the output bus into a high Z state until the next command is given during the “Update IR” state.

SAMPLE/PRELOAD

SAMPLE/PRELOAD is a 1149.1 mandatory instruction. When the SAMPLE/PRELOAD instructions are loaded into the instruction register and the TAP controller is in the Capture-DR state, a snapshot of data on the inputs and output pins is captured in the boundary scan register.

The user must be aware that the TAP controller clock can only operate at a frequency up to 20 MHz, while the SRAM clock operates more than an order of magnitude faster. Because there is a large difference in the clock frequencies, it is possible that during the Capture-DR state, an input or output will undergo a transition. The TAP may then try to capture a signal while in transition (metastable state). This will not harm the device, but there is no guarantee as to the value that will be captured. Repeatable results may not be possible.

To guarantee that the boundary scan register will capture the correct value of a signal, the SRAM signal must be stabilized long enough to meet the TAP controller’s capture set-up plus hold times (t_{CS} and t_{CH}). The SRAM clock input might not be captured correctly if there is no way in a design to stop (or slow) the clock during a SAMPLE/PRELOAD instruction. If this is an issue, it is still possible to capture all other signals and simply ignore the value of the CK and CK# captured in the boundary scan register.

Once the data is captured, it is possible to shift out the data by putting the TAP into the Shift-DR state. This places the boundary scan register between the TDI and TDO pins.

PRELOAD allows an initial data pattern to be placed at the latched parallel outputs of the boundary scan register cells prior to the selection of another boundary scan test operation.

The shifting of data for the SAMPLE and PRELOAD phases can occur concurrently when required—that is, while data captured is shifted out, the preloaded data can be shifted in.

BYPASS

When the BYPASS instruction is loaded in the instruction register and the TAP is placed in a Shift-DR state, the bypass register is placed between the TDI and TDO pins. The advantage of the BYPASS instruction is that it shortens the boundary scan path when multiple devices are connected together on a board.

EXTEST

The EXTEST instruction enables the preloaded data to be driven out through the system output pins. This instruction also selects the boundary scan register to be connected for serial access between the TDI and TDO in the shift-DR controller state.

Reserved

These instructions are not implemented but are reserved for future use. Do not use these instructions.

TAP Controller State Diagram

The TAP Controller State Diagram follows. [13]

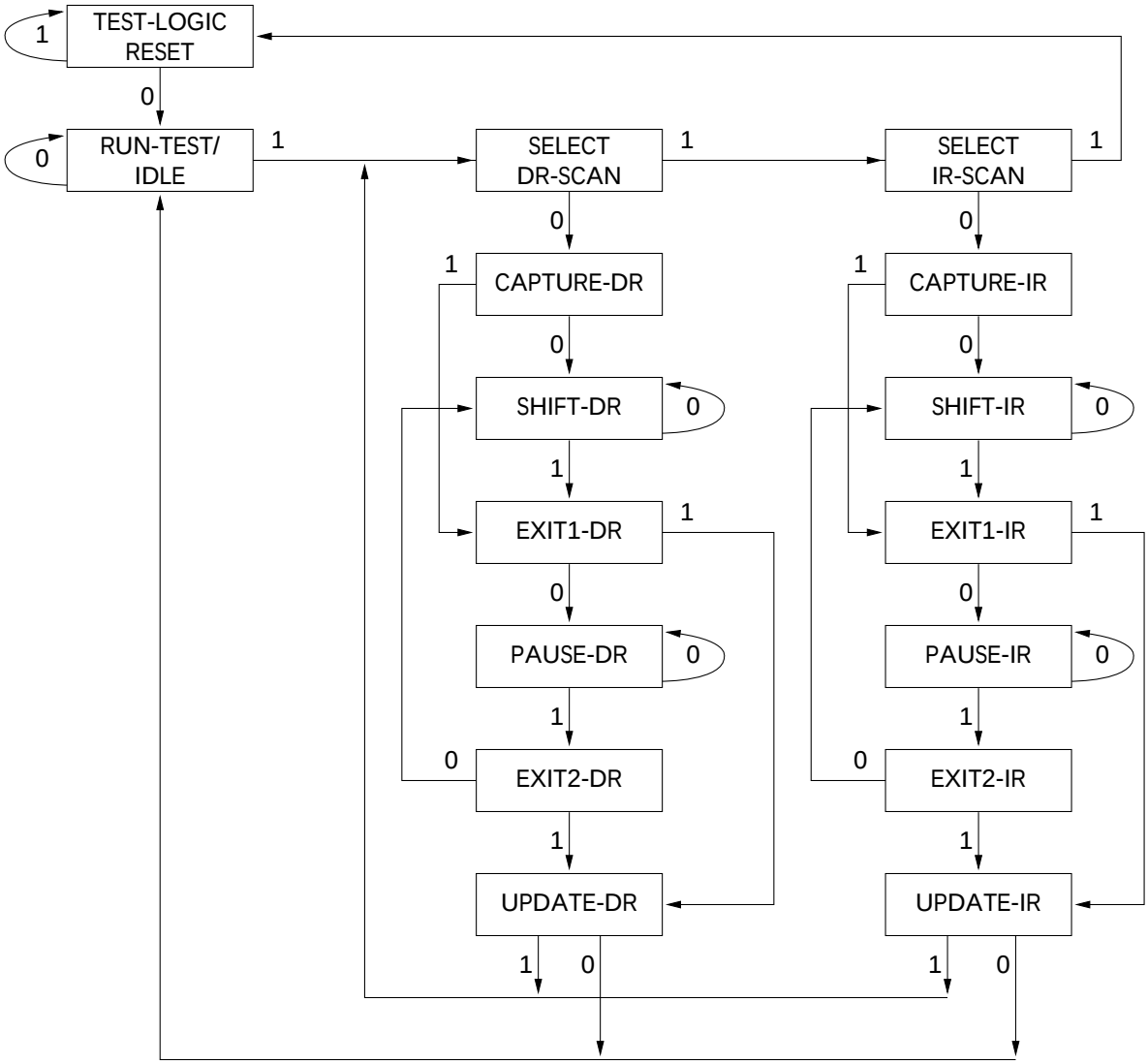

Note
13. The 0/1 next to each state represents the value of TMS at the rising edge of the TCK.

TAP Controller Block Diagram

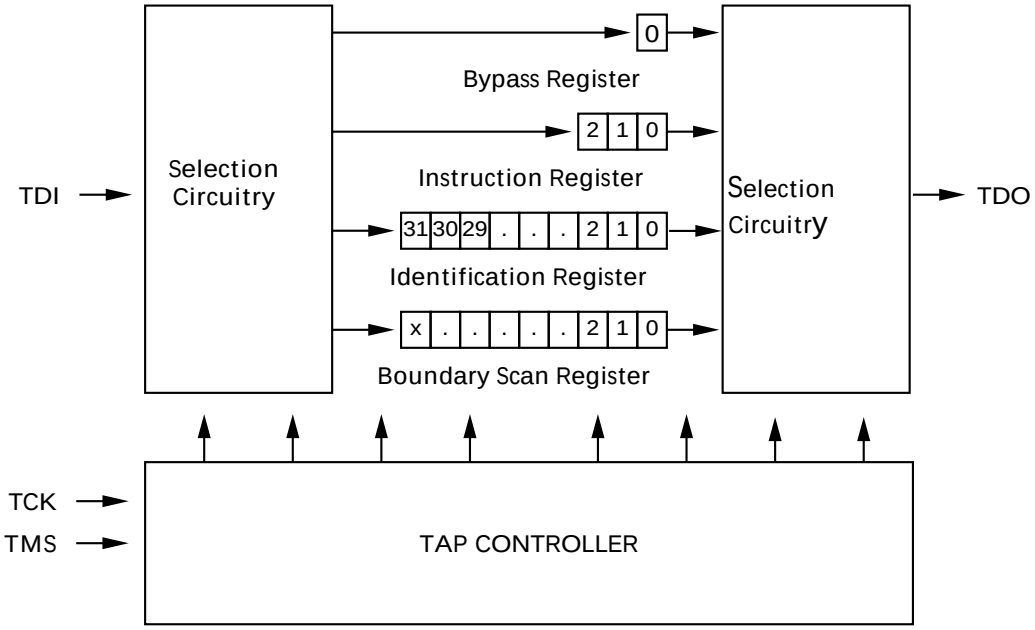

TAP Timing

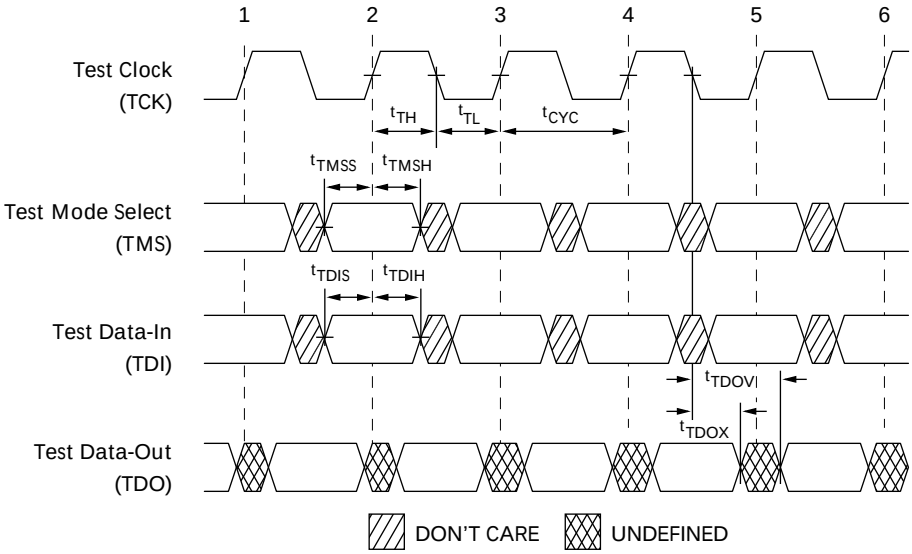

TAP AC Switching Characteristics

Over the Operating Range

Parameter [14, 15]	Description	Min	Max	Unit
Clock				
t_{TCYC}	TCK clock cycle time	50	–	ns
t_{TF}	TCK clock frequency	–	20	MHz
t_{TH}	TCK clock HIGH time	20	–	ns
t_{TL}	TCK clock LOW time	20	–	ns
Output Times				
t_{TDOV}	TCK clock LOW to TDO valid	–	10	ns
t_{TDOX}	TCK clock LOW to TDO invalid	0	–	ns
Set-up Times				
t_{TMSS}	TMS set-up to TCK clock rise	5	–	ns
t_{TDIS}	TDI set-up to TCK clock rise	5	–	ns
t_{CS}	Capture set-up to TCK rise	5	–	ns
Hold Times				
t_{TMSH}	TMS hold after TCK clock rise	5	–	ns
t_{TDIH}	TDI hold after clock rise	5	–	ns
t_{CH}	Capture hold after clock rise	5	–	ns

2.5 V TAP AC Test Conditions

Input pulse levels ..... V_{SS} to 2.5 V
Input rise and fall time ..... 1 ns
Input timing reference levels ..... 1.25 V
Output reference levels ..... 1.25 V
Test load termination supply voltage ..... 1.25 V

2.5 V TAP AC Output Load Equivalent

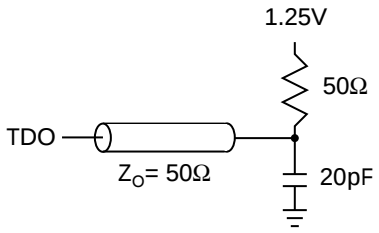

Notes
14. t_{CS} and t_{CH} refer to the set-up and hold time requirements of latching data from the boundary scan register.
15. Test conditions are specified using the load in TAP AC test Conditions. t_R/t_F = 1 ns.

TAP DC Electrical Characteristics and Operating Conditions

(0 °C < T_A < +70 °C; V_{DD} = 2.5 V ± 0.125 V unless otherwise noted)

Parameter [16]	Description	Test Conditions		Min	Max	Unit
V_{OH1}	Output HIGH voltage	I_{OH} = –1.0 mA, V_{DDQ} = 2.5 V		2.0	–	V
V_{OH2}	Output HIGH voltage	I_{OH} = –100 µA, V_{DDQ} = 2.5 V		2.1	–	V
V_{OL1}	Output LOW voltage	I_{OL} = 8.0 mA, V_{DDQ} = 2.5 V		–	0.4	V
V_{OL2}	Output LOW voltage	I_{OL} = 100 µA	V_{DDQ} = 2.5 V	–	0.2	V
V_{IH}	Input HIGH voltage		V_{DDQ} = 2.5 V	1.7	V_{DD} + 0.3	V
V_{IL}	Input LOW voltage		V_{DDQ} = 2.5 V	–0.3	0.7	V
I_X	Input Load current	GND ≤ V_{IN} ≤ V_{DDQ}		–5	5	µA

Identification Register Definitions

Instruction Field	CY7C1354CV25	CY7C1356CV25	Description
Revision number (31:29)	000	000	Reserved for version number.
Cypress device ID (28:12)	01011001000100110	01011001000010110	Reserved for future use.
Cypress JEDEC ID (11:1)	00000110100	00000110100	Allows unique identification of SRAM vendor.
ID register presence (0)	1	1	Indicate the presence of an ID register.

Scan Register Sizes

Register Name	Bit Size (× 36)	Bit Size (× 18)
Instruction	3	3
Bypass	1	1
ID	32	32
Boundary scan order (119-ball BGA package)	69	69
Boundary scan order (165-ball FBGA package)	69	69

Instruction Codes

Instruction	Code	Description
EXTEST	000	Captures the input/output ring contents. Places the boundary scan register between the TDI and TDO. Forces all SRAM outputs to high Z state.
IDCODE	001	Loads the ID register with the vendor ID code and places the register between TDI and TDO. This operation does not affect SRAM operation.
SAMPLE Z	010	Captures the input/output contents. Places the boundary scan register between TDI and TDO. Forces all SRAM output drivers to a high Z state.
RESERVED	011	Do Not Use: This instruction is reserved for future use.
SAMPLE/PRELOAD	100	Captures the input/output ring contents. Places the boundary scan register between TDI and TDO. Does not affect the SRAM operation.
RESERVED	101	Do Not Use: This instruction is reserved for future use.
RESERVED	110	Do Not Use: This instruction is reserved for future use.
BYPASS	111	Places the bypass register between TDI and TDO. This operation does not affect SRAM operation.

Note
16. All voltages referenced to V_{SS} (GND).

Boundary Scan Exit Order

(256 K × 36)

Bit #	119-ball ID	165-ball ID
1	K4	B6
2	H4	B7
3	M4	A7
4	F4	B8
5	B4	A8
6	G4	A9
7	C3	B10
8	B3	A10
9	D6	C11
10	H7	E10
11	G6	F10
12	E6	G10
13	D7	D10
14	E7	D11
15	F6	E11
16	G7	F11
17	H6	G11
18	T7	H11
19	K7	J10
20	L6	K10
21	N6	L10
22	P7	M10
23	N7	J11
24	M6	K11
25	L7	L11
26	K6	M11
27	P6	N11
28	T4	R11
29	A3	R10
30	C5	P10
31	B5	R9
32	A5	P9
33	C6	R8
34	A6	P8
35	P4	R6
36	N4	P6
37	R6	R4
38	T5	P4
39	T3	R3
40	R2	P3
41	R3	R1
42	P2	N1
43	P1	L2
44	L2	K2

Boundary Scan Exit Order *(continued)*

(256 K × 36)

Bit #	119-ball ID	165-ball ID
45	K1	J2
46	N2	M2
47	N1	M1
48	M2	L1
49	L1	K1
50	K2	J1
51	Not Bonded (Preset to 1)	Not Bonded (Preset to 1)
52	H1	G2
53	G2	F2
54	E2	E2
55	D1	D2
56	H2	G1
57	G1	F1
58	F2	E1
59	E1	D1
60	D2	C1
61	C2	B2
62	A2	A2
63	E4	A3
64	B2	B3
65	L3	B4
66	G3	A4
67	G5	A5
68	L5	B5
69	B6	A6

Boundary Scan Exit Order

(512 K × 18)

Bit #	119-ball ID	165-ball ID
1	K4	B6
2	H4	B7
3	M4	A7
4	F4	B8
5	B4	A8
6	G4	A9
7	C3	B10
8	B3	A10
9	T2	A11
10	Not Bonded (Preset to 0)	Not Bonded (Preset to 0)
11	Not Bonded (Preset to 0)	Not Bonded (Preset to 0)
12	Not Bonded (Preset to 0)	Not Bonded (Preset to 0)
13	D6	C11
14	E7	D11
15	F6	E11
16	G7	F11
17	H6	G11
18	T7	H11
19	K7	J10
20	L6	K10
21	N6	L10
22	P7	M10
23	Not Bonded (Preset to 0)	Not Bonded (Preset to 0)
24	Not Bonded (Preset to 0)	Not Bonded (Preset to 0)
25	Not Bonded (Preset to 0)	Not Bonded (Preset to 0)
26	Not Bonded (Preset to 0)	Not Bonded (Preset to 0)
27	Not Bonded (Preset to 0)	Not Bonded (Preset to 0)
28	T6	R11
29	A3	R10
30	C5	P10
31	B5	R9
32	A5	P9
33	C6	R8
34	A6	P8
35	P4	R6
36	N4	P6
37	R6	R4
38	T5	P4
39	T3	R3

Boundary Scan Exit Order *(continued)*

(512 K × 18)

Bit #	119-ball ID	165-ball ID
40	R2	P3
41	R3	R1
42	Not Bonded (Preset to 0)	Not Bonded (Preset to 0)
43	Not Bonded (Preset to 0)	Not Bonded (Preset to 0)
44	Not Bonded (Preset to 0)	Not Bonded (Preset to 0)
45	Not Bonded (Preset to 0)	Not Bonded (Preset to 0)
46	P2	N1
47	N1	M1
48	M2	L1
49	L1	K1
50	K2	J1
51	Not Bonded (Preset to 1)	Not Bonded (Preset to 1)
52	H1	G2
53	G2	F2
54	E2	E2
55	D1	D2
56	Not Bonded (Preset to 0)	Not Bonded (Preset to 0)
57	Not Bonded (Preset to 0)	Not Bonded (Preset to 0)
58	Not Bonded (Preset to 0)	Not Bonded (Preset to 0)
59	Not Bonded (Preset to 0)	Not Bonded (Preset to 0)
60	Not Bonded (Preset to 0)	Not Bonded (Preset to 0)
61	C2	B2
62	A2	A2
63	E4	A3
64	B2	B3
65	Not Bonded (Preset to 0)	Not Bonded (Preset to 0)
66	G3	Not Bonded (Preset to 0)
67	Not Bonded (Preset to 0)	A4
68	L5	B5
69	B6	A6
69	B6	A6
69	B6	A6
68	L5	B5
69	B6	A6
66	G3	Not Bonded (Preset to 0)
67	Not Bonded (Preset to 0)	A4
68	L5	B5
69	B6	A6

Maximum Ratings

Exceeding maximum ratings may shorten the useful life of the device. User guidelines are not tested.

Storage temperature ..... –65 °C to +150 °C

Ambient temperature with power applied ..... –55 °C to +125 °C

Supply voltage on V_{DD} relative to GND .....–0.5 V to +3.6 V

Supply voltage on V_{DDQ} relative to GND ..... –0.5 V to +V_{DD}

DC to outputs in tri-state .....–0.5 V to V_{DDQ} + 0.5 V

DC input voltage .....–0.5 V to V_{DD} + 0.5 V

Current into outputs (LOW) ..... 20 mA

Static discharge voltage (per MIL-STD-883, method 3015) ..... > 2001 V

Latch-up current ..... > 200 mA

Operating Range

Range	Ambient Temperature	V_{DD}/V_{DDQ}
Commercial	0 °C to +70 °C	2.5 V ±5%
Industrial	–40 °C to +85 °C	

Electrical Characteristics

Over the Operating Range

Parameter [17, 18]	Description	Test Conditions		Min	Max	Unit
V_{DD}	Power supply voltage			2.375	2.625	V
V_{DDQ}	I/O supply voltage	for 2.5 V I/O		2.375	V_{DD}	V
V_{OH}	Output HIGH voltage	for 2.5 V I/O, I_{OH} = –1.0 mA		2.0	–	V
V_{OL}	Output LOW voltage	for 2.5 V I/O, I_{OL}= 1.0 mA		–	0.4	V
V_{IH}	Input HIGH voltage	for 2.5 V I/O		1.7	V_{DD} + 0.3 V	V
V_{IL}	Input LOW voltage [17]	for 2.5 V I/O		–0.3	0.7	V
I_X	Input leakage current except ZZ and MODE	GND ≤ V_I ≤ V_{DDQ}		–5	5	µA
	Input current of MODE	Input = V_{SS}		–30	–	µA
		Input = V_{DD}		–	5	µA
	Input current of ZZ	Input = V_{SS}		–5	–	µA
		Input = V_{DD}		–	30	µA
I_{OZ}	Output leakage current	GND ≤ V_I ≤ V_{DDQ}, output disabled		–5	5	µA
I_{DD}	V_{DD} operating supply	V_{DD} = Max, I_{OUT} = 0 mA, f = f_{MAX} = 1/t_{CYC}	4-ns cycle, 250 MHz	–	250	mA
			5-ns cycle, 200 MHz	–	220	mA
			6-ns cycle, 166 MHz	–	180	mA
I_{SB1}	Automatic CE power-down current — TTL inputs	Max V_{DD}, device deselected, V_{IN} ≥ V_{IH} or V_{IN} ≤ V_{IL}, f = f_{MAX} = 1/t_{CYC}	4-ns cycle, 250 MHz	–	130	mA
			5-ns cycle, 200 MHz	–	120	mA
			6-ns cycle, 166 MHz	–	110	mA
I_{SB2}	Automatic CE power-down current — CMOS inputs	Max V_{DD}, device deselected, V_{IN} ≤ 0.3 V or V_{IN} ≥ V_{DDQ} – 0.3 V, f = 0	All speed grades	–	40	mA

Notes

17. Overshoot: $V_{IH(AC)}$ < V_{DD} + 1.5 V (Pulse width less than t_{CYC}/2), undershoot: $V_{IL(AC)}$ > –2 V (Pulse width less than t_{CYC}/2).
18. $T_{Power-up}$: Assumes a linear ramp from 0 V to $V_{DD(min)}$ within 200 ms. During this time V_{IH} < V_{DD} and V_{DDQ} ≤ V_{DD}.

Electrical Characteristics *(continued)*

Over the Operating Range

Parameter [17, 18]	Description	Test Conditions		Min	Max	Unit
I_{SB3}	Automatic CE power-down current — CMOS inputs	Max V_{DD}, device deselected, $V_{IN} \le 0.3$ V or $V_{IN} \ge V_{DDQ} - 0.3$ V, f = f_{MAX} = $1/t_{CYC}$	4-ns cycle, 250 MHz	–	120	mA
			5-ns cycle, 200 MHz	–	110	mA
			6-ns cycle, 166 MHz	–	100	mA
I_{SB4}	Automatic CE power-down current — TTL inputs	Max V_{DD}, device deselected, $V_{IN} \ge V_{IH}$ or $V_{IN} \le V_{IL}$, f = 0	All speed grades	–	40	mA

Capacitance

Parameter [19]	Description	Test Conditions	100-pin TQFP Max	119-ball BGA Max	165-ball FBGA Max	Unit
C_{IN}	Input capacitance	T_A = 25 °C, f = 1 MHz, V_{DD} = 2.5 V, V_{DDQ} = 2.5 V	5	5	5	pF
C_{CLK}	Clock input capacitance		5	5	5	pF
$C_{I/O}$	Input/output capacitance		5	7	7	pF

Thermal Resistance

Parameter [19]	Description	Test Conditions	100-pin TQFP Package	119-ball BGA Package	165-ball FBGA Package	Unit
Θ_{JA}	Thermal resistance (junction to ambient)	Test conditions follow standard test methods and procedures for measuring thermal impedance, per EIA/JESD51.	29.41	34.1	16.8	°C/W
Θ_{JC}	Thermal resistance (junction to case)		6.13	14	3.0	°C/W

AC Test Loads and Waveforms

Figure 4. AC Test Loads and Waveforms

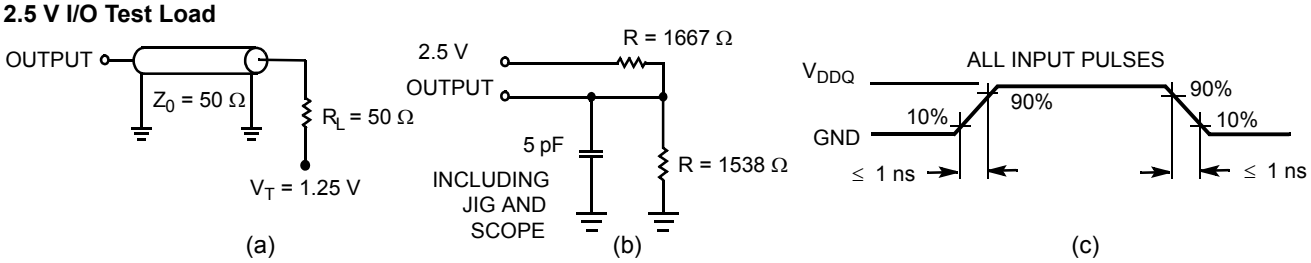

Note
19. Tested initially and after any design or process change that may affect these parameters.

Switching Characteristics

Over the Operating Range

Parameter [20, 21]	Description	-250		-200		-166		Unit
		Min	Max	Min	Max	Min	Max	
t_{Power} [22]	V_{CC}(typical) to the first access read or write	1	–	1	–	1	–	ms
Clock								
t_{CYC}	Clock cycle time	4.0	–	5	–	6	–	ns
F_{MAX}	Maximum operating frequency	–	250	–	200	–	166	MHz
t_{CH}	Clock HIGH	1.8	–	2.0	–	2.4	–	ns
t_{CL}	Clock LOW	1.8	–	2.0	–	2.4	–	ns
Output Times								
t_{CO}	Data output valid after CLK rise	–	2.8	–	3.2	–	3.5	ns
t_{EOV}	$\overline{OE}$ LOW to output valid	–	2.8	–	3.2	–	3.5	ns
t_{DOH}	Data output hold after CLK rise	1.25	–	1.5	–	1.5	–	ns
t_{CHZ}	Clock to high Z [23, 24, 25]	1.25	2.8	1.5	3.2	1.5	3.5	ns
t_{CLZ}	Clock to low Z [23, 24, 25]	1.25	–	1.5	–	1.5	–	ns
t_{EOHZ}	$\overline{OE}$ HIGH to output high Z [23, 24, 25]	–	2.8	–	3.2	–	3.5	ns
t_{EOLZ}	$\overline{OE}$ LOW to output low Z [23, 24, 25]	0	–	0	–	0	–	ns
Set-up Times								
t_{AS}	Address set-up before CLK rise	1.4	–	1.5	–	1.5	–	ns
t_{DS}	Data input set-up before CLK rise	1.4	–	1.5	–	1.5	–	ns
t_{CENS}	$\overline{CEN}$ set-up before CLK rise	1.4	–	1.5	–	1.5	–	ns
t_{WES}	$\overline{WE}$, $\overline{BW_X}$ set-up before CLK rise	1.4	–	1.5	–	1.5	–	ns
t_{ALS}	ADV/$\overline{LD}$ set-up before CLK rise	1.4	–	1.5	–	1.5	–	ns
t_{CES}	Chip select set-up	1.4	–	1.5	–	1.5	–	ns
Hold Times								
t_{AH}	Address hold after CLK rise	0.4	–	0.5	–	0.5	–	ns
t_{DH}	Data input hold after CLK rise	0.4	–	0.5	–	0.5	–	ns
t_{CENH}	$\overline{CEN}$ hold after CLK rise	0.4	–	0.5	–	0.5	–	ns
t_{WEH}	$\overline{WE}$, $\overline{BW_X}$ hold after CLK rise	0.4	–	0.5	–	0.5	–	ns
t_{ALH}	ADV/$\overline{LD}$ hold after CLK rise	0.4	–	0.5	–	0.5	–	ns
t_{CEH}	Chip select hold after CLK rise	0.4	–	0.5	–	0.5	–	ns

Notes
20. Timing reference level is when V_{DDQ} = 2.5 V.
21. Test conditions shown in (a) of Figure 4 on page 21 unless otherwise noted.
22. This part has a voltage regulator internally; t_{power} is the time power needs to be supplied above V_{DD} minimum initially, before a Read or Write operation can be initiated.
23. t_{CHZ}, t_{CLZ}, t_{EOLZ}, and t_{EOHZ} are specified with AC test conditions shown in (b) of Figure 4 on page 21. Transition is measured ± 200 mV from steady-state voltage.
24. At any given voltage and temperature, t_{EOHZ} is less than t_{EOLZ} and t_{CHZ} is less than t_{CLZ} to eliminate bus contention between SRAMs when sharing the same data bus. These specifications do not imply a bus contention condition, but reflect parameters guaranteed over worst case user conditions. Device is designed to achieve high Z prior to low Z under the same system conditions.
25. This parameter is sampled and not 100% tested.

Switching Waveforms

Figure 5. Read/Write Timing [26, 27, 28]

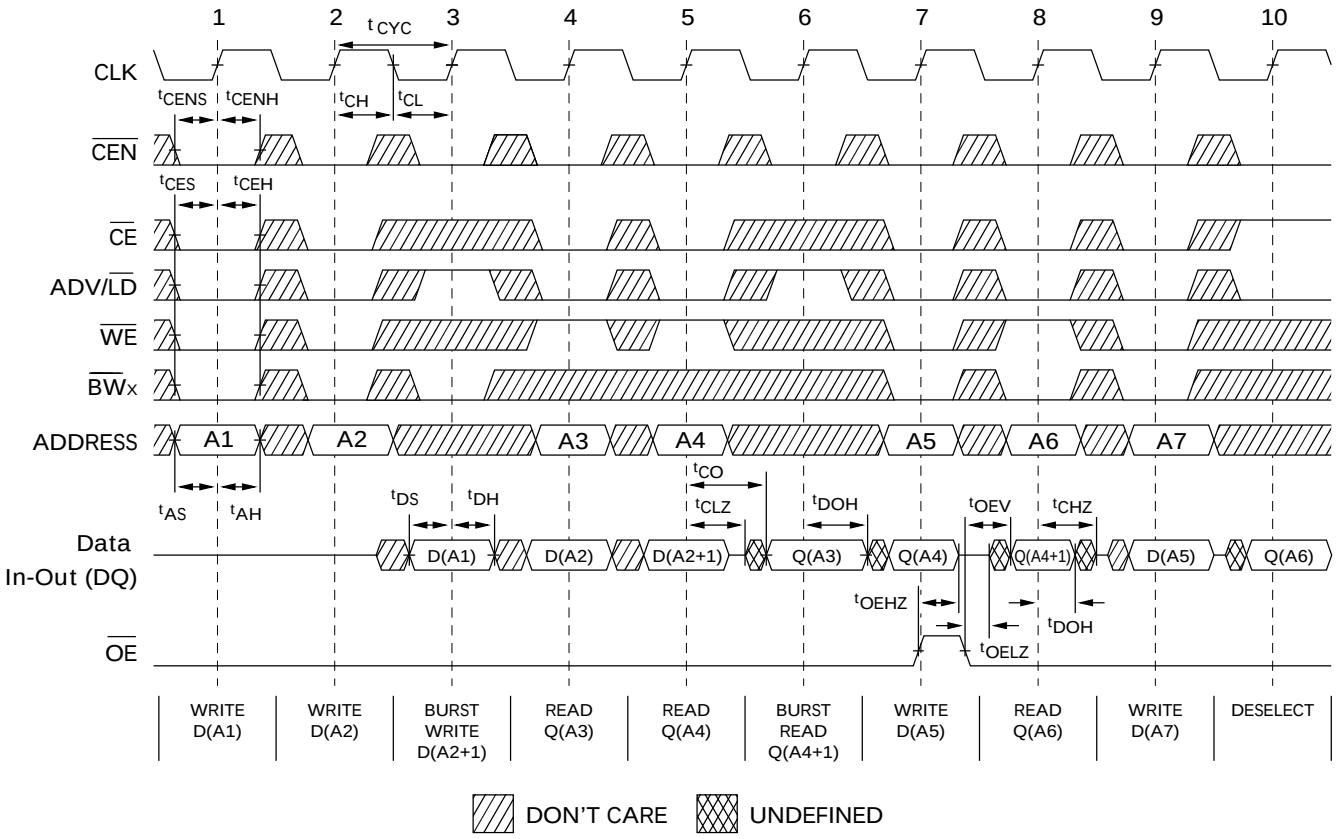

Notes
26. For this waveform ZZ is tied LOW.
27. When $\overline{CE}$ is LOW, $\overline{CE_1}$ is LOW, CE_2 is HIGH and $\overline{CE_3}$ is LOW. When $\overline{CE}$ is HIGH, $\overline{CE_1}$ is HIGH or CE_2 is LOW or $\overline{CE_3}$ is HIGH.
28. Order of the Burst sequence is determined by the status of the MODE (0 = Linear, 1 = Interleaved). Burst operations are optional.

Switching Waveforms *(continued)*

Figure 6. NOP, STALL and DESELECT CYCLES [29, 30, 31]

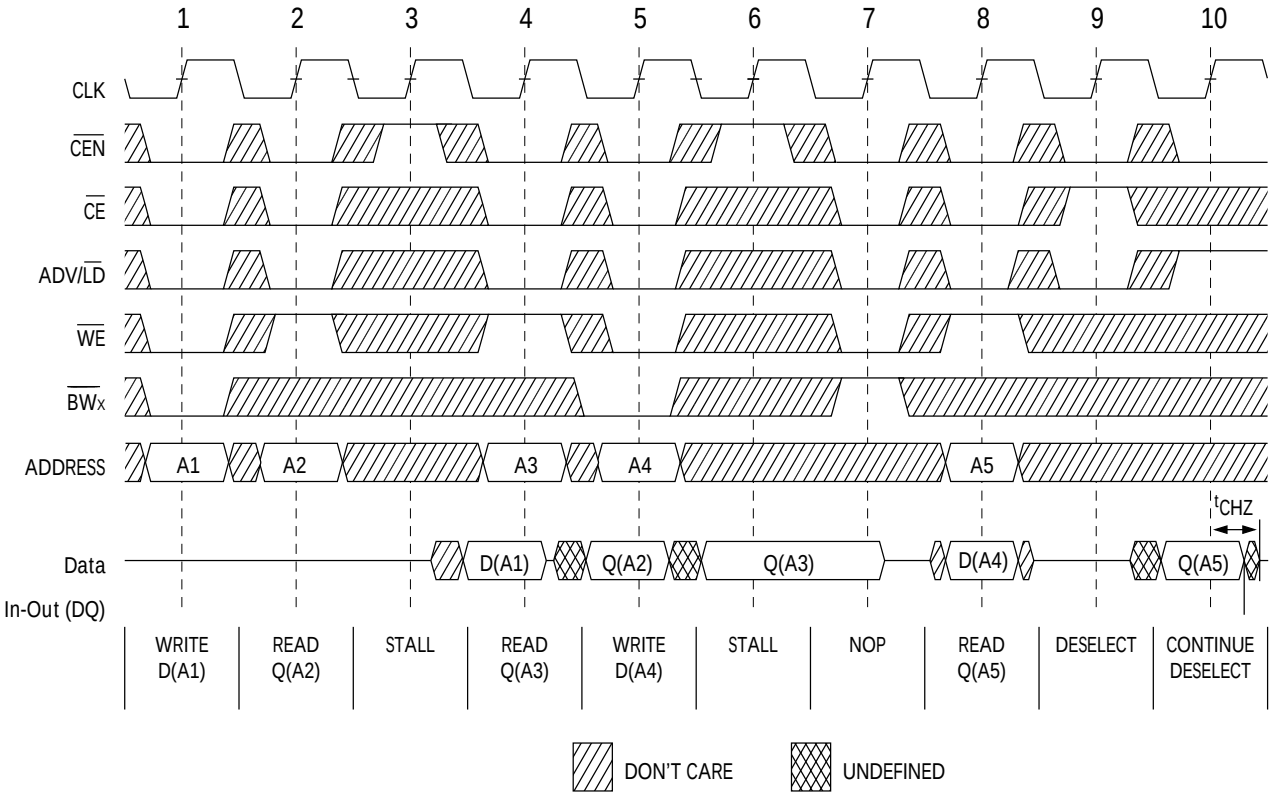

Notes
29. For this waveform ZZ is tied LOW.
30. When $\overline{CE}$ is LOW, $\overline{CE}_1$ is LOW, CE_2 is HIGH and $\overline{CE}_3$ is LOW. When $\overline{CE}$ is HIGH, $\overline{CE}_1$ is HIGH or CE_2 is LOW or $\overline{CE}_3$ is HIGH.
31. The IGNORE CLOCK EDGE or STALL cycle (Clock 3) illustrated $\overline{CEN}$ being used to create a pause. A write is not performed during this cycle.

Switching Waveforms *(continued)*

Figure 7. ZZ Mode Timing [32, 33]

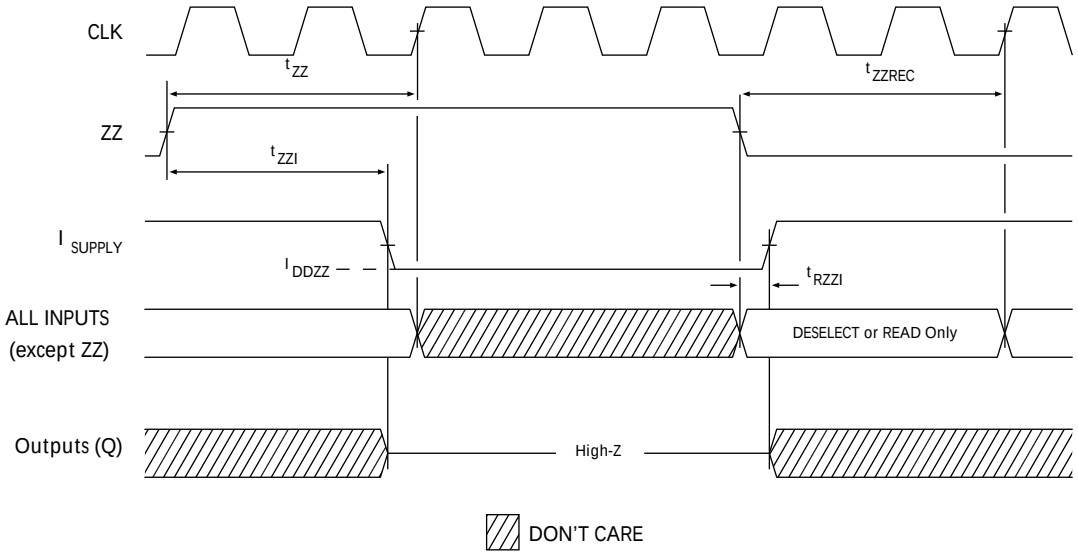

Notes
32. Device must be deselected when entering ZZ mode. See cycle description table for all possible signal conditions to deselect the device.
33. I/Os are in high Z when exiting ZZ sleep mode.

Ordering Information

Cypress offers other versions of this type of product in many different configurations and features. The below table contains only the list of parts that are currently available.For a complete listing of all options, visit the Cypress website at www.cypress.com and refer to the product summary page at http://www.cypress.com/products or contact your local sales representative.

Cypress maintains a worldwide network of offices, solution centers, manufacturer's representatives and distributors. To find the office closest to you, visit us at http://www.cypress.com/go/datasheet/offices.

Speed (MHz)	Ordering Code	Package Diagram	Part and Package Type	Operating Range
166	CY7C1354CV25-166AXC	51-85050	100-pin TQFP (14 × 20 × 1.4 mm) Pb-free	Commercial
	CY7C1356CV25-166AXC			
	CY7C1354CV25-166BZC	51-85180	165-ball FBGA (13 × 15 × 1.4 mm)	
200	CY7C1354CV25-200AXC	51-85050	100-pin TQFP (14 × 20 × 1.4 mm) Pb-free	Commercial

Ordering Code Definitions

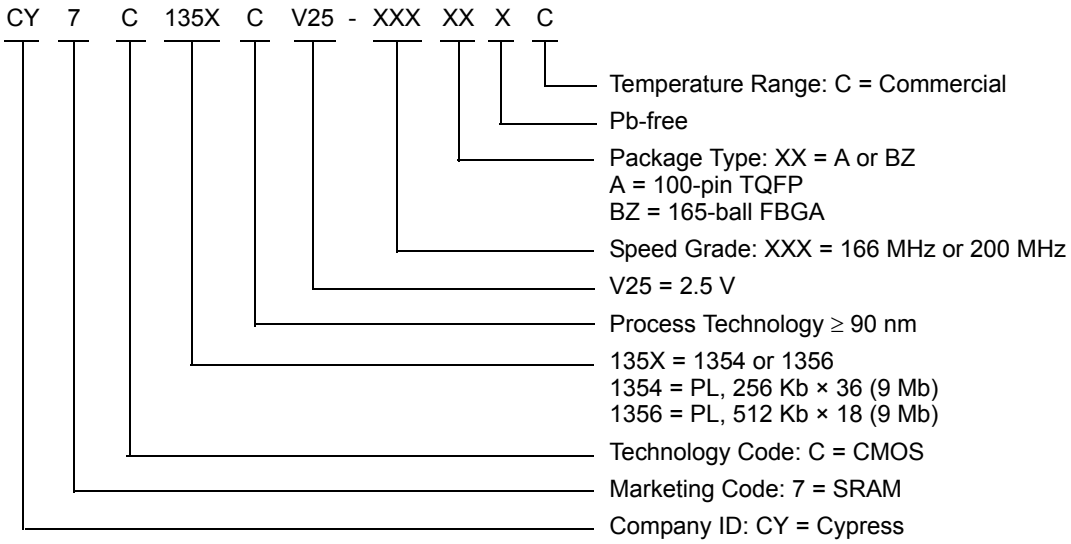

Package Diagrams

Figure 8. 100-pin TQFP (14 × 20 × 1.4 mm) A100RA Package Outline, 51-85050

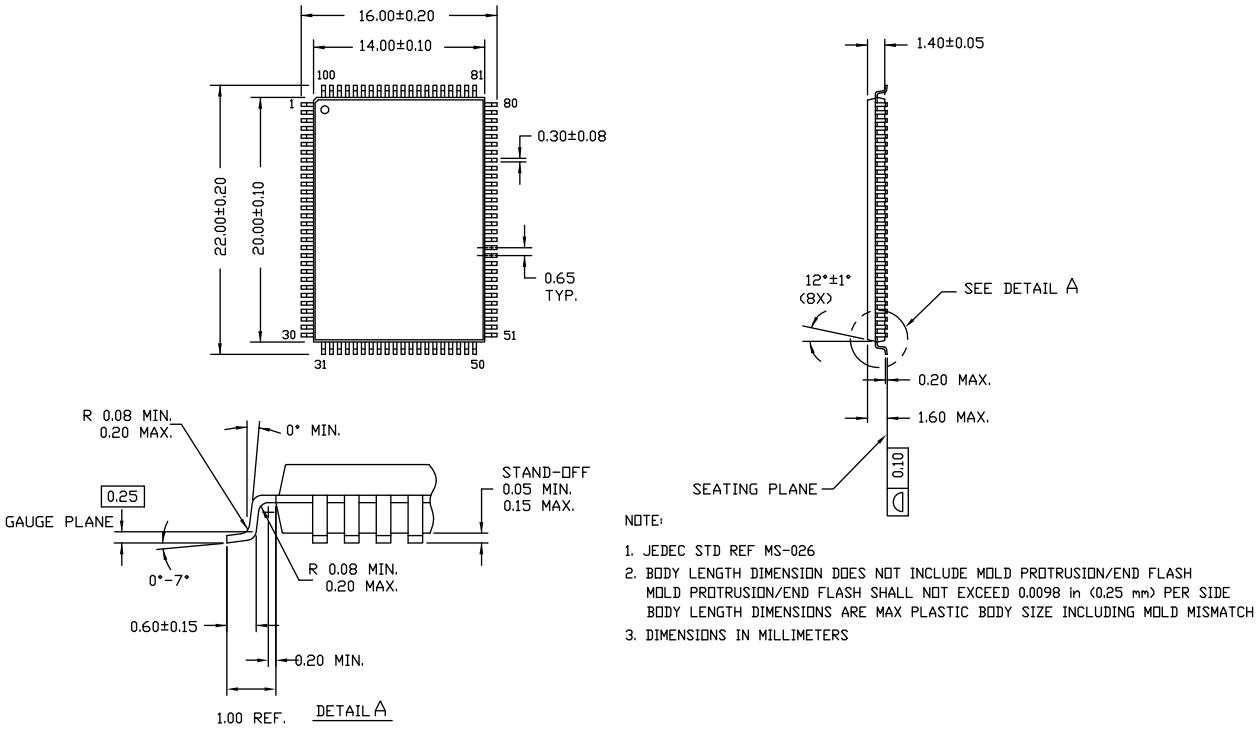

NOTE:

1. JEDEC STD REF MS-026
2. BODY LENGTH DIMENSION DOES NOT INCLUDE MOLD PROTRUSION/END FLASH
   MOLD PROTRUSION/END FLASH SHALL NOT EXCEED 0.0098 in (0.25 mm) PER SIDE
   BODY LENGTH DIMENSIONS ARE MAX PLASTIC BODY SIZE INCLUDING MOLD MISMATCH
3. DIMENSIONS IN MILLIMETERS

51-85050 *D

Package Diagrams *(continued)*

Figure 9. 119-ball PBGA (14 × 22 × 2.4 mm) BG119 Package Outline, 51-85115

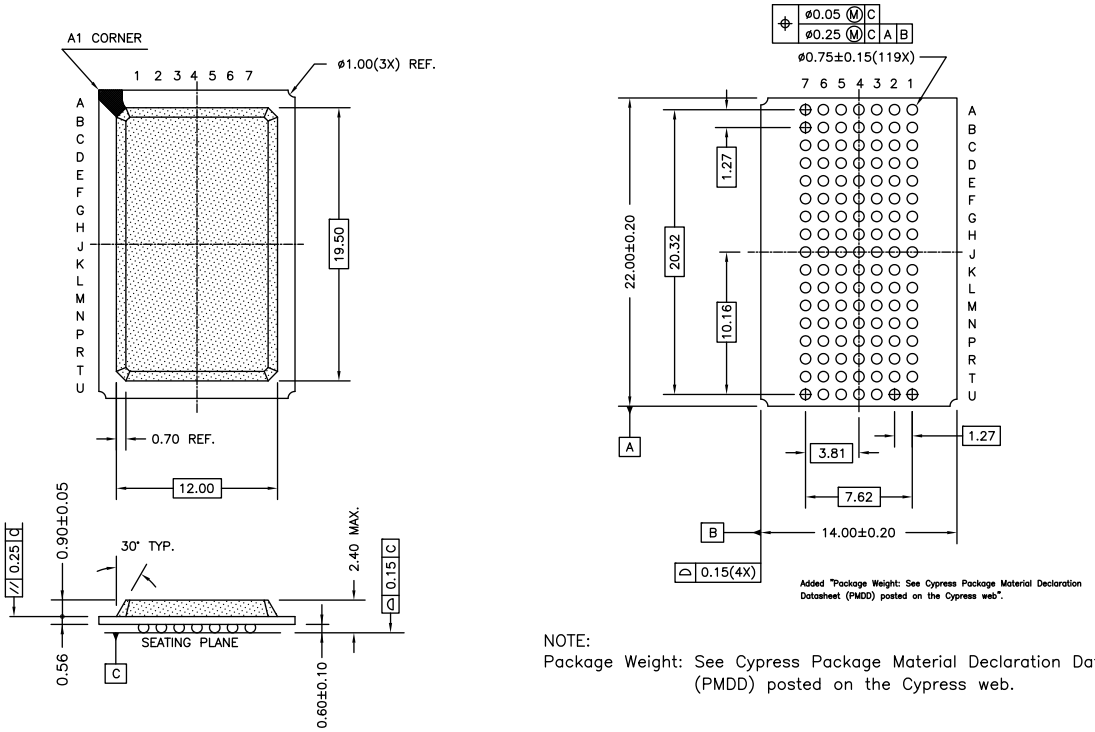

NOTE:
Package Weight: See Cypress Package Material Declaration Datasheet (PMDD) posted on the Cypress web.

51-85115 *D

Package Diagrams *(continued)*

Figure 10. 165-ball FBGA (13 × 15 × 1.4 mm) BB165D/BW165D (0.5 Ball Diameter) Package Outline, 51-85180

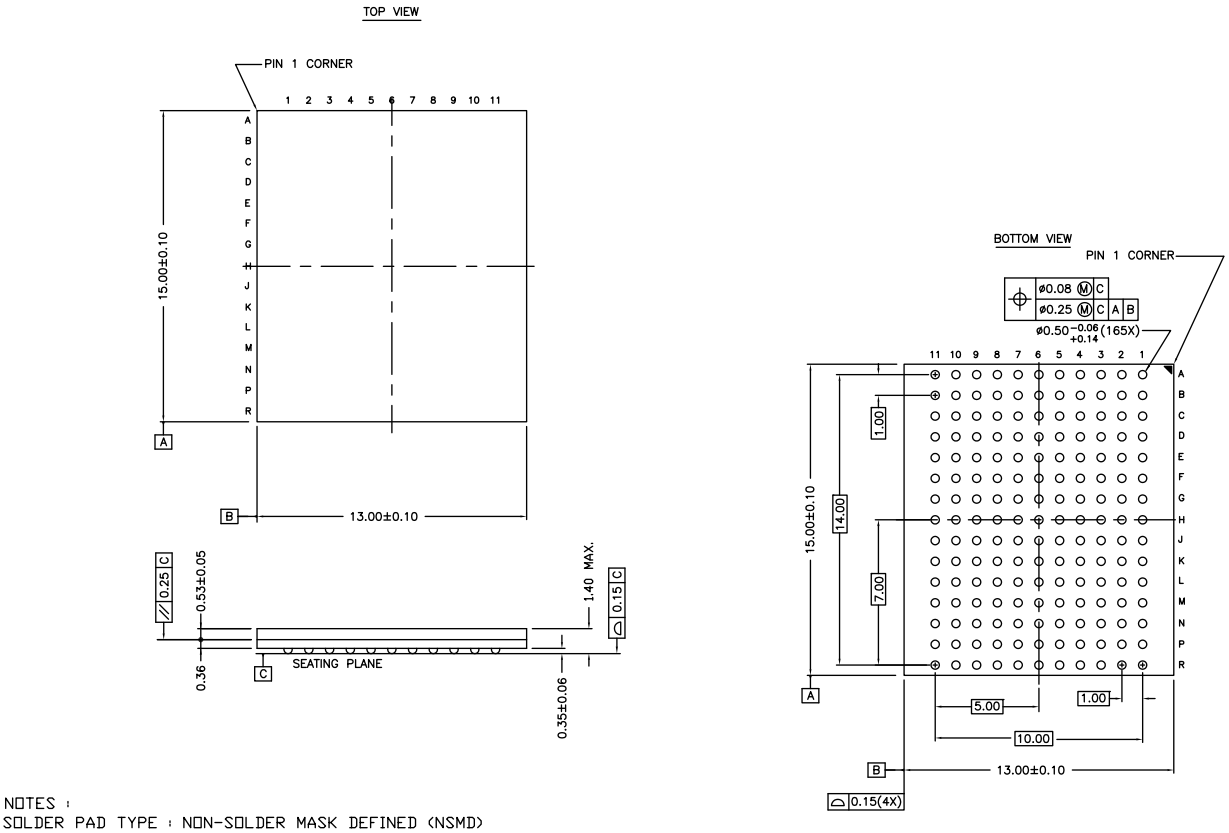

NOTES :
SOLDER PAD TYPE : NON-SOLDER MASK DEFINED (NSMD)
JEDEC REFERENCE : MO-216 / ISSUE E
PACKAGE CODE : BB0AC/BW0AC
PACKAGE WEIGHT : SEE CYPRESS PACKAGE MATERIAL DECLARATION DATASHEET (PMDD) POSTED ON THE CYPRESS WEB.

51-85180 *F

Acronyms

Acronym	Description
BGA	ball grid array
$\overline{CE}$	chip enable
$\overline{CEN}$	clock enable
CMOS	complementary metal oxide semiconductor
EIA	electronic industries alliance
FBGA	fine-pitch ball grid array
I/O	input/output
JEDEC	joint electron devices engineering council
JTAG	joint test action group
LSB	least significant bit
MSB	most significant bit
NoBL	No Bus Latency
$\overline{OE}$	output enable
SRAM	static random access memory
TAP	test access port
TCK	test clock
TDI	test data-in
TDO	test data-out
TMS	test mode select
TQFP	thin quad flat pack
TTL	transistor-transistor logic
$\overline{WE}$	write enable

Document Conventions

Units of Measure

Symbol	Unit of Measure
°C	degree Celsius
MHz	megahertz
µA	microampere
mA	milliampere
mm	millimeter
ms	millisecond
mV	millivolt
ns	nanosecond
Ω	ohm
%	percent
pF	picofarad
V	volt
W	watt

Document History Page

Document Title: CY7C1354CV25/CY7C1356CV25, 9-Mbit (256 K × 36/512 K × 18) Pipelined SRAM with NoBL™ Architecture Document Number: 38-05537				
Rev.	**ECN No.**	**Issue Date**	**Orig. of Change**	**Description of Change**
**	242032	See ECN	RKF	New data sheet
*A	278969	See ECN	RKF	Changed Boundary Scan order to match the B Rev of these devices
*B	284929	See ECN	RKF / VBL	Included DC Characteristics Table Changed ISB1 and ISB3 from DC Characteristic table as follows: ISB1: 225 MHz -> 130 mA, 200 MHz -> 120 mA, 167 MHz -> 110 mA ISB3: 225 MHz -> 120 mA, 200 MHz -> 110 mA, 167 MHz -> 100 mA Changed IDDZZ to 50mA. Added BG and BZ pkg lead-free part numbers to ordering info section.
*C	323636	See ECN	PCI	Changed frequency of 225 MHz into 250 MHz Added t_{CYC} of 4.0 ns for 250 MHz Changed Θ_{JA} and Θ_{JC} for TQFP Package from 25 and 9 °C/W to 29.41 and 6.13 °C/W respectively Changed Θ_{JA} and Θ_{JC} for BGA Package from 25 and 6 °C/W to 34.1 and 14.0 °C/W respectively Changed Θ_{JA} and Θ_{JC} for FBGA Package from 27 and 6 °C/W to 16.8 and 3.0 °C/W respectively Modified address expansion as per JEDEC Standard Removed comment of Lead-free BG and BZ packages availability
*D	332879	See ECN	PCI	Unshaded 200 and 166 MHz speed bin in the AC/DC Table and Selection Guide Added Address Expansion pins in the Pin Definition Table Removed description of Extest Output Bus Tri-state on page # 11 Modified V_{OL}, V_{OH} test conditions Updated Ordering Information Table
*E	357258	See ECN	PCI	Changed from Preliminary to Final Changed I_{SB2} from 35 to 40 mA Removed Shading on 250MHz Speed Bin in Selection Guide and AC/DC Table Updated Ordering Information Table
*F	377095	See ECN	PCI	Modified test condition in note# 15 from $V_{DDQ} < V_{DD}$ to $V_{DDQ} \leq V_{DD}$
*G	408298	See ECN	RXU	Changed address of Cypress Semiconductor Corporation on Page# 1 from “3901 North First Street” to “198 Champion Court” Changed three-state to tri-state. Modified “Input Load” to “Input Leakage Current except ZZ and MODE” in the Electrical Characteristics Table. Replaced Package Name column with Package Diagram in the Ordering Information table. Updated the Ordering Information Table.
*H	501793	See ECN	VKN	Added the Maximum Rating for Supply Voltage on V_{DDQ} Relative to GND Changed t_{TH}, t_{TL} from 25 ns to 20 ns and t_{TDOV} from 5 ns to 10 ns in TAP AC Switching Characteristics table. Updated the Ordering Information table.
*I	2898958	03/25/10	NJY	Removed inactive parts from the ordering information table. Updated package diagrams.
*J	3033272	09/19/2010	NJY	Added Ordering Code Definitions Added Acronyms and Units of Measure Minor edits and updated in new template
*K	3052726	10/08/10	NJY	Removed pruned part CY7C1356CV25-200AXC from the ordering information table.
*L	3385314	09/29/2011	PRIT	Updated Package Diagrams.

Document History Page *(continued)*

Document Title: CY7C1354CV25/CY7C1356CV25, 9-Mbit (256 K × 36/512 K × 18) Pipelined SRAM with NoBL™ Architecture Document Number: 38-05537				
Rev.	**ECN No.**	**Issue Date**	**Orig. of Change**	**Description of Change**
*M	3754566	09/25/2012	PRIT	Updated Package Diagrams (spec 51-85115 (Changed revision from *C to *D), spec 51-85180 (Changed revision from *C to *F)).

Sales, Solutions, and Legal Information

Worldwide Sales and Design Support

Cypress maintains a worldwide network of offices, solution centers, manufacturer's representatives, and distributors. To find the office closest to you, visit us at Cypress Locations.

Products

Automotive	cypress.com/go/automotive
Clocks & Buffers	cypress.com/go/clocks
Interface	cypress.com/go/interface
Lighting & Power Control	cypress.com/go/powerpsoc cypress.com/go/plc
Memory	cypress.com/go/memory
Optical & Image Sensing	cypress.com/go/image
PSoC	cypress.com/go/psoc
Touch Sensing	cypress.com/go/touch
USB Controllers	cypress.com/go/USB
Wireless/RF	cypress.com/go/wireless

PSoC Solutions

psoc.cypress.com/solutions

PSoC 1 | PSoC 3 | PSoC 5

© Cypress Semiconductor Corporation, 2004-2012. The information contained herein is subject to change without notice. Cypress Semiconductor Corporation assumes no responsibility for the use of any circuitry other than circuitry embodied in a Cypress product. Nor does it convey or imply any license under patent or other rights. Cypress products are not warranted nor intended to be used for medical, life support, life saving, critical control or safety applications, unless pursuant to an express written agreement with Cypress. Furthermore, Cypress does not authorize its products for use as critical components in life-support systems where a malfunction or failure may reasonably be expected to result in significant injury to the user. The inclusion of Cypress products in life-support systems application implies that the manufacturer assumes all risk of such use and in doing so indemnifies Cypress against all charges.

Any Source Code (software and/or firmware) is owned by Cypress Semiconductor Corporation (Cypress) and is protected by and subject to worldwide patent protection (United States and foreign), United States copyright laws and international treaty provisions. Cypress hereby grants to licensee a personal, non-exclusive, non-transferable license to copy, use, modify, create derivative works of, and compile the Cypress Source Code and derivative works for the sole purpose of creating custom software and or firmware in support of licensee product to be used only in conjunction with a Cypress integrated circuit as specified in the applicable agreement. Any reproduction, modification, translation, compilation, or representation of this Source Code except as specified above is prohibited without the express written permission of Cypress.

Disclaimer: CYPRESS MAKES NO WARRANTY OF ANY KIND, EXPRESS OR IMPLIED, WITH REGARD TO THIS MATERIAL, INCLUDING, BUT NOT LIMITED TO, THE IMPLIED WARRANTIES OF MERCHANTABILITY AND FITNESS FOR A PARTICULAR PURPOSE. Cypress reserves the right to make changes without further notice to the materials described herein. Cypress does not assume any liability arising out of the application or use of any product or circuit described herein. Cypress does not authorize its products for use as critical components in life-support systems where a malfunction or failure may reasonably be expected to result in significant injury to the user. The inclusion of Cypress' product in a life-support systems application implies that the manufacturer assumes all risk of such use and in doing so indemnifies Cypress against all charges.

Use may be limited by and subject to the applicable Cypress software license agreement.

NoBL and No Bus Latency are trademarks of Cypress Semiconductor Corporation. ZBT is a trademark of Integrated Device Technology, Inc. All products and company names mentioned in this document may be the trademarks of their respective holders.