CY7C1325G

4-Mbit (256K × 18) Flow-Through Sync SRAM

Features

- 256K × 18 common I/O
- 3.3 V core power supply (V_{DD})
- 2.5 V or 3.3 V I/O power supply (V_{DDQ})
- Fast clock-to-output times
- 6.5 ns (133 MHz version)
- Provide high performance 2-1-1-1 access rate
- User selectable burst counter supporting Intel Pentium interleaved or linear burst sequences
- Separate processor and controller address strobes
- Synchronous self timed write
- Asynchronous output enable
- Available in Pb-free 100-pin TQFP package
- “ZZ” sleep mode option

Functional Description

The CY7C1325G is a 256K × 18 synchronous cache RAM designed to interface with high speed microprocessors with minimum glue logic. Maximum access delay from clock rise is 6.5 ns (133 MHz version). A 2-bit on-chip counter captures the first address in a burst and increments the address automatically for the rest of the burst access. All synchronous inputs are gated by registers controlled by a positive-edge-triggered Clock Input (CLK). The synchronous inputs include all addresses, all data inputs, address-pipelining chip enable ($\overline{CE}_1$), depth-expansion chip enables (CE_2 and $\overline{CE}_3$), burst control inputs (ADSC, ADSP, and ADV), write enables ($\overline{BW}_{[A:B]}$, and $\overline{BWE}$), and global write ($\overline{GW}$). Asynchronous inputs include the output enable ($\overline{OE}$) and the ZZ pin.

The CY7C1325G allows either interleaved or linear burst sequences, selected by the MODE input pin. A HIGH selects an interleaved burst sequence, while a LOW selects a linear burst sequence. Burst accesses can be initiated with the processor address strobe ($\overline{ADSP}$) or the cache controller address strobe (ADSC) inputs.

Addresses and chip enables are registered at rising edge of clock when either address strobe processor ($\overline{ADSP}$) or address strobe controller (ADSC) are active. Subsequent burst addresses can be internally generated as controlled by the advance pin ($\overline{ADV}$).

The CY7C1325G operates from a +3.3 V core power supply while all outputs may operate with either a +2.5 or +3.3 V supply. All inputs and outputs are JEDEC-standard JESD8-5-compatible.

For a complete list of related documentation, click here.

Logic Block Diagram

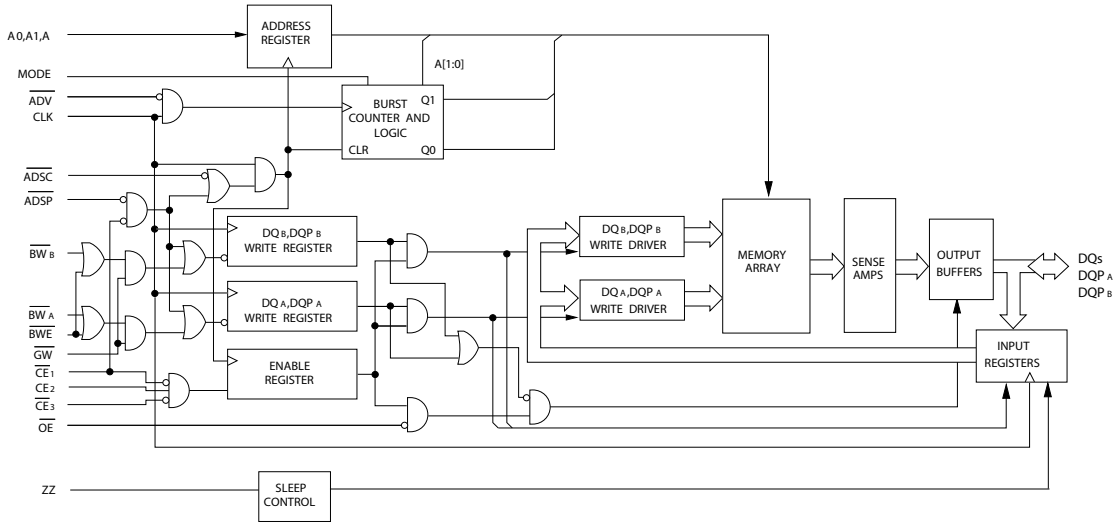

Errata: For information on silicon errata, see "Errata" on page 21. Details include trigger conditions, devices affected, and proposed workaround.

Contents

Selection Guide **3**
Pin Configurations **3**
Pin Definitions **4**
Functional Overview **6**
- Single Read Accesses 6
- Single Write Accesses Initiated by $\overline{\text{ADSP}}$ 6
- Single Write Accesses Initiated by ADSC 6
- Burst Sequences 6
- Sleep Mode 6
- Interleaved Burst Address Table 7
- Linear Burst Address Table 7
- ZZ Mode Electrical Characteristics 7

Truth Table **8**
Truth Table for Read/Write **9**
Maximum Ratings **10**
Operating Range **10**
Neutron Soft Error Immunity **10**
Electrical Characteristics **10**
Capacitance **11**
Thermal Resistance **11**
AC Test Loads and Waveforms **12**
Switching Characteristics **13**
Timing Diagrams **14**
Ordering Information **18**
- Ordering Code Definitions 18

Package Diagrams **19**
Acronyms **20**
Document Conventions **20**
- Units of Measure 20

Errata **21**
- Part Numbers Affected 21
- Product Status 21
- Ram9 Sync ZZ Pin Issues Errata Summary 21

Document History Page **22**
Sales, Solutions, and Legal Information **24**
- Worldwide Sales and Design Support 24
- Products 24
- PSoC®Solutions 24
- Cypress Developer Community 24
- Technical Support 24

Selection Guide

Description	133 MHz	Unit
Maximum access time	6.5	ns
Maximum operating current	225	mA
Maximum standby current	40	mA

Pin Configurations

Figure 1. 100-pin TQFP (14 × 20 × 1.4 mm) pinout [1]

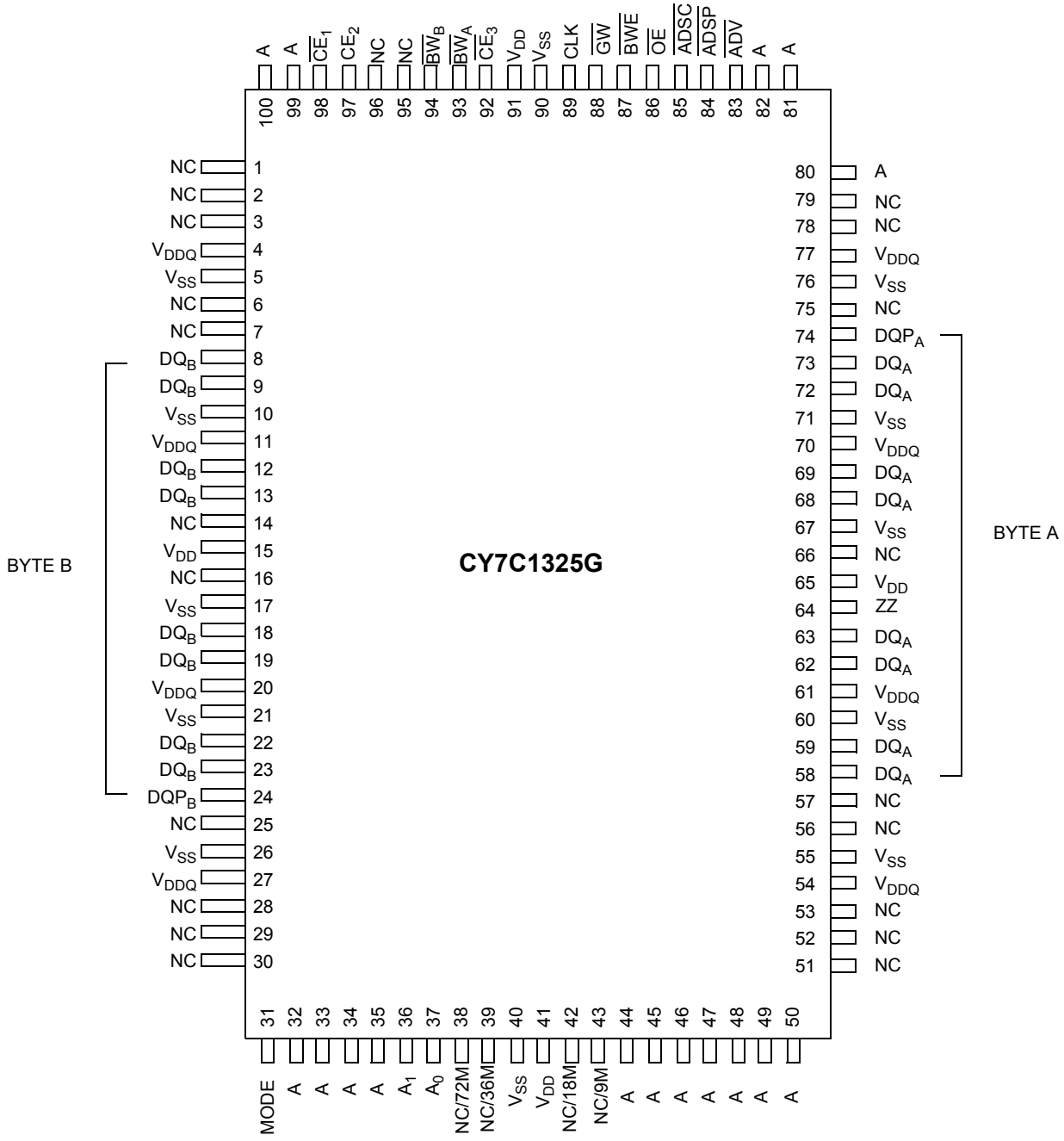

Note
1. Errata: The ZZ pin (Pin 64) needs to be externally connected to ground. For more information, see "Errata" on page 21.

Pin Definitions

Name	I/O	Description
A_0, A_1, A	Input-synchronous	**Address inputs used to select one of the 256 K address locations**. Sampled at the rising edge of the CLK if $\overline{ADSP}$ or $\overline{ADSC}$ is active LOW, and $\overline{CE}_1$, CE_2, and $\overline{CE}_3$ are sampled active. $A_{[1:0]}$ feed the 2 bit counter.
$\overline{BW}_A$, $\overline{BW}_B$	Input-synchronous	**Byte write select inputs, active LOW**. Qualified with $\overline{BWE}$ to conduct byte writes to the SRAM. Sampled on the rising edge of CLK.
$\overline{GW}$	Input-synchronous	**Global write enable input, active LOW**. When asserted LOW on the rising edge of CLK, a global write is conducted (all bytes are written, regardless of the values on $\overline{BW}_{[A:B]}$ and $\overline{BWE}$).
$\overline{BWE}$	Input-synchronous	**Byte write enable input, active LOW**. Sampled on the rising edge of CLK. This signal must be asserted LOW to conduct a byte write.
CLK	Input-clock	**Clock input**. Used to capture all synchronous inputs to the device. Also used to increment the burst counter when $\overline{ADV}$ is asserted LOW, during a burst operation.
$\overline{CE}_1$	Input-synchronous	**Chip enable 1 input, active LOW**. Sampled on the rising edge of CLK. Used in conjunction with CE_2 and $\overline{CE}_3$ to select/deselect the device. $\overline{ADSP}$ is ignored if $\overline{CE}_1$ is HIGH. $\overline{CE}_1$ is sampled only when a new external address is loaded.
CE_2	Input-synchronous	**Chip enable 2 input, active HIGH**. Sampled on the rising edge of CLK. Used in conjunction with $\overline{CE}_1$ and $\overline{CE}_3$ to select/deselect the device. CE_2 is sampled only when a new external address is loaded.
$\overline{CE}_3$	Input-synchronous	**Chip enable 3 input, active LOW**. Sampled on the rising edge of CLK. Used in conjunction with $\overline{CE}_1$ and CE_2 to select/deselect the device. $\overline{CE}_3$ is sampled only when a new external address is loaded.
$\overline{OE}$	Input-asynchronous	**Output enable, asynchronous input, active LOW**. Controls the direction of the I/O pins. When LOW, the I/O pins behave as outputs. When deasserted HIGH, I/O pins are tristated, and act as input data pins. $\overline{OE}$ is masked during the first clock of a read cycle when emerging from a deselected state.
$\overline{ADV}$	Input-synchronous	**Advance input signal, sampled on the rising edge of CLK**. When asserted, it automatically increments the address in a burst cycle.
$\overline{ADSP}$	Input-synchronous	**Address strobe from processor, sampled on the rising edge of CLK, active LOW**. When asserted LOW, addresses presented to the device are captured in the address registers. $A_{[1:0]}$ are also loaded into the burst counter. When $\overline{ADSP}$ and $\overline{ADSC}$ are both asserted, only $\overline{ADSP}$ is recognized. ASDP is ignored when $\overline{CE}_1$ is deasserted HIGH.
$\overline{ADSC}$	Input-synchronous	**Address strobe from controller, sampled on the rising edge of CLK, active LOW**. When asserted LOW, addresses presented to the device are captured in the address registers. $A_{[1:0]}$ are also loaded into the burst counter. When $\overline{ADSP}$ and $\overline{ADSC}$ are both asserted, only $\overline{ADSP}$ is recognized.
ZZ[2]	Input-asynchronous	**ZZ "sleep" input, active HIGH**. When asserted HIGH places the device in a non-time-critical "sleep" condition with data integrity preserved.During normal operation, this pin has to be low or left floating. ZZ pin has an internal pull-down.
DQs DQP_A, DQP_B	I/O-synchronous	**Bidirectional data I/O lines**. As inputs, they feed into an on-chip data register that is triggered by the rising edge of CLK. As outputs, they deliver the data contained in the memory location specified by the addresses presented during the previous clock rise of the read cycle. The direction of the pins is controlled by $\overline{OE}$. When $\overline{OE}$ is asserted LOW, the pins behave as outputs. When HIGH, DQs and $DQP_{[A:B]}$ are placed in a tristate condition.

Note
2. Errata: The ZZ pin (Pin 64) needs to be externally connected to ground. For more information, see "Errata" on page 21.

Pin Definitions *(continued)*

Name	I/O	Description
V_{DD}	Power supply	**Power supply inputs to the core of the device**.
V_{SS}	Ground	**Ground for the core of the device**.
V_{DDQ}	I/O power supply	**Power supply for the I/O circuitry**.
MODE	Input-static	**Selects burst order**. When tied to GND selects linear burst sequence. When tied to V_{DD} or left floating selects interleaved burst sequence. This is a strap pin and should remain static during device operation. Mode pin has an internal pull-up.
NC	–	**No connects**. Not Internally connected to the die.
NC/9M, NC/18M, NC/36M, NC/72M, NC/144M, NC/288M, NC/576M, NC/1G	–	**No connects**. Not internally connected to the die. NC/9M, NC/18M, NC/36M, NC/72M, NC/144M, NC/288M, NC/576M and NC/1G are address expansion pins that are not internally connected to the die.

Functional Overview

All synchronous inputs pass through input registers controlled by the rising edge of the clock. Maximum access delay from the clock rise (t_{CDV}) is 6.5 ns (133 MHz device).

The CY7C1325G supports secondary cache in systems utilizing either a linear or interleaved burst sequence. The interleaved burst order supports Pentium and i486 processors. The linear burst sequence is suited for processors that utilize a linear burst sequence. The burst order is user-selectable, and is determined by sampling the MODE input. Accesses can be initiated with either the processor address strobe ($\overline{ADSP}$) or the controller address strobe ($\overline{ADSC}$). Address advancement through the burst sequence is controlled by the $\overline{ADV}$ input. A two bit on-chip wraparound burst counter captures the first address in a burst sequence and automatically increments the address for the rest of the burst access.

Byte write operations are qualified with the byte write enable ($\overline{BWE}$) and byte write select ($\overline{BW}_{[A:B]}$) inputs. A global write enable ($\overline{GW}$) overrides all byte write inputs and writes data to all four bytes. All writes are simplified with on-chip synchronous self timed write circuitry.

Three synchronous chip selects ($\overline{CE}_1$, CE_2, $\overline{CE}_3$) and an asynchronous output enable ($\overline{OE}$) provide for easy bank selection and output tristate control. $\overline{ADSP}$ is ignored if $\overline{CE}_1$ is HIGH.

Single Read Accesses

A single read access is initiated when the following conditions are satisfied at clock rise: (1) $\overline{CE}_1$, CE_2, and $\overline{CE}_3$ are all asserted active, and (2) $\overline{ADSP}$ or $\overline{ADSC}$ is asserted LOW (if the access is initiated by $\overline{ADSC}$, the write inputs must be deasserted during this first cycle). The address presented to the address inputs is latched into the address register and the burst counter/control logic and presented to the memory core. If the $\overline{OE}$ input is asserted LOW, the requested data is available at the data outputs, a maximum to t_{CDV} after clock rise. $\overline{ADSP}$ is ignored if $\overline{CE}_1$ is HIGH.

Single Write Accesses Initiated by $\overline{ADSP}$

This access is initiated when the following conditions are satisfied at clock rise: (1) $\overline{CE}_1$, CE_2, $\overline{CE}_3$ are all asserted active, and (2) $\overline{ADSP}$ is asserted LOW. The addresses presented are loaded into the address register and the burst inputs ($\overline{GW}$, $\overline{BWE}$, and $\overline{BW}_{[A:B]}$) are ignored during this first clock cycle. If the write inputs are asserted active (see Write Cycle Descriptions table for appropriate states that indicate a write) on the next clock rise, the appropriate data is latched and written into the device. Byte writes are allowed. During byte writes, $\overline{BW}_A$ controls DQ_A and $\overline{BW}_B$ controls DQ_B. All I/Os are tristated during a byte write.Since this is a common I/O device, the asynchronous $\overline{OE}$ input signal must be deasserted and the I/Os must be tristated prior to the presentation of data to DQ_s. As a safety precaution, the data lines are tristated after a write cycle is detected, regardless of the state of $\overline{OE}$.

Single Write Accesses Initiated by $\overline{ADSC}$

This write access is initiated when the following conditions are satisfied at clock rise: (1) $\overline{CE}_1$, CE_2, and $\overline{CE}_3$ are all asserted active, (2) $\overline{ADSC}$ is asserted LOW, (3) $\overline{ADSP}$ is deasserted HIGH, and (4) the write input signals ($\overline{GW}$, $\overline{BWE}$, and $\overline{BW}_{[A:B]}$) indicate a write access. $\overline{ADSC}$ is ignored if $\overline{ADSP}$ is active LOW.

The addresses presented are loaded into the address register and the burst counter/control logic and delivered to the memory core. The information presented to $DQ_{[A:D]}$ is written into the specified address location. Byte writes are allowed. During byte writes, $\overline{BW}_A$ controls DQ_A, $\overline{BW}_B$ controls DQ_B. All I/Os are tristated when a write is detected, even a byte write. Since this is a common I/O device, the asynchronous $\overline{OE}$ input signal must be deasserted and the I/Os must be tristated prior to the presentation of data to DQ_s. As a safety precaution, the data lines are tristated after a write cycle is detected, regardless of the state of $\overline{OE}$.

Burst Sequences

The CY7C1325G provides an on-chip two bit wraparound burst counter inside the SRAM. The burst counter is fed by $A_{[1:0]}$, and can follow either a linear or interleaved burst order. The burst order is determined by the state of the MODE input. A LOW on MODE selects a linear burst sequence. A HIGH on MODE selects an interleaved burst order. Leaving MODE unconnected causes the device to default to a interleaved burst sequence.

Sleep Mode

The ZZ input pin is an asynchronous input. Asserting ZZ places the SRAM in a power conservation “sleep” mode. Two clock cycles are required to enter into or exit from this “sleep” mode. While in this mode, data integrity is guaranteed. Accesses pending when entering the “sleep” mode are not considered valid nor is the completion of the operation guaranteed. The device must be deselected prior to entering the “sleep” mode. $\overline{CE}$s, $\overline{ADSP}$, and $\overline{ADSC}$ must remain inactive for the duration of t_{ZZREC} after the ZZ input returns LOW.

Interleaved Burst Address Table

(MODE = Floating or V_{DD})

First Address A1:A0	Second Address A1:A0	Third Address A1:A0	Fourth Address A1:A0
00	01	10	11
01	00	11	10
10	11	00	01
11	10	01	00

Linear Burst Address Table

(MODE = GND)

First Address A1:A0	Second Address A1:A0	Third Address A1:A0	Fourth Address A1:A0
00	01	10	11
01	10	11	00
10	11	00	01
11	00	01	10

ZZ Mode Electrical Characteristics

Parameter	Description	Test Conditions	Min	Max	Unit
I_{DDZZ}	Sleep mode standby current	ZZ $\geq V_{DD} - 0.2$ V	–	40	mA
t_{ZZS}	Device operation to ZZ	ZZ $\geq V_{DD} - 0.2$ V	–	$2t_{CYC}$	ns
t_{ZZREC}	ZZ recovery time	ZZ $\leq$ 0.2 V	$2t_{CYC}$	–	ns
t_{ZZI}	ZZ active to sleep current	This parameter is sampled	–	$2t_{CYC}$	ns
t_{RZZI}	ZZ inactive to exit sleep current	This parameter is sampled	0	–	ns

Truth Table

The Truth Table for part CY7C1325G is as follows. [3, 4, 5, 6, 7]

Cycle Description	Address Used	$\overline{CE_1}$	CE_2	$\overline{CE_3}$	ZZ	$\overline{ADSP}$	$\overline{ADSC}$	$\overline{ADV}$	$\overline{WRITE}$	$\overline{OE}$	CLK	DQ
Deselected cycle, power-down	None	H	X	X	L	X	L	X	X	X	L–H	Tri-state
Deselected cycle, power-down	None	L	L	X	L	L	X	X	X	X	L–H	Tri-state
Deselected cycle, power-down	None	L	X	H	L	L	X	X	X	X	L–H	Tri-state
Deselected cycle, power-down	None	L	L	X	L	H	L	X	X	X	L–H	Tri-state
Deselected cycle, power-down	None	X	X	H	L	H	L	X	X	X	L–H	Tri-state
Sleep mode, power-down	None	X	X	X	H	X	X	X	X	X	X	Tri-state
Read cycle, begin burst	External	L	H	L	L	L	X	X	X	L	L–H	Q
Read cycle, begin burst	External	L	H	L	L	L	X	X	X	H	L–H	Tri-state
Write cycle, begin burst	External	L	H	L	L	H	L	X	L	X	L–H	D
Read cycle, begin burst	External	L	H	L	L	H	L	X	H	L	L–H	Q
Read cycle, begin burst	External	L	H	L	L	H	L	X	H	H	L–H	Tri-state
Read cycle, continue burst	Next	X	X	X	L	H	H	L	H	L	L–H	Q
Read cycle, continue burst	Next	X	X	X	L	H	H	L	H	H	L–H	Tri-state
Read cycle, continue burst	Next	H	X	X	L	X	H	L	H	L	L–H	Q
Read cycle, continue burst	Next	H	X	X	L	X	H	L	H	H	L–H	Tri-state
Write cycle, continue burst	Next	X	X	X	L	H	H	L	L	X	L–H	D
Write cycle, continue burst	Next	H	X	X	L	X	H	L	L	X	L–H	D
Read cycle, suspend burst	Current	X	X	X	L	H	H	H	H	L	L–H	Q
Read cycle, suspend burst	Current	X	X	X	L	H	H	H	H	H	L–H	Tri-state
Read cycle, suspend burst	Current	H	X	X	L	X	H	H	H	L	L–H	Q
Read cycle, suspend burst	Current	H	X	X	L	X	H	H	H	H	L–H	Tri-state
Write cycle, suspend burst	Current	X	X	X	L	H	H	H	L	X	L–H	D
Write cycle, suspend burst	Current	H	X	X	L	X	H	H	L	X	L–H	D

Notes

3. X = “Don’t Care.” H = Logic HIGH, L = Logic LOW.
4. $\overline{WRITE}$ = L when any one or more Byte Write enable signals ($\overline{BW_A}$, $\overline{BW_B}$) and $\overline{BWE}$ = L or $\overline{GW}$ = L.
   $\overline{WRITE}$ = H when all Byte write enable signals ($\overline{BW_A}$, $\overline{BW_B}$), $\overline{BWE}$, $\overline{GW}$ = H.
5. The DQ pins are controlled by the current cycle and the $\overline{OE}$ signal. $\overline{OE}$ is asynchronous and is not sampled with the clock.
6. The SRAM always initiates a read cycle when $\overline{ADSP}$ is asserted, regardless of the state of $\overline{GW}$, $\overline{BWE}$, or $\overline{BW}_{[A:B]}$.
   Writes may occur only on subsequent clocks after the $\overline{ADSP}$ or with the assertion of $\overline{ADSC}$.
   As a result, $\overline{OE}$ must be driven HIGH prior to the start of the write cycle to allow the outputs to tristate. $\overline{OE}$ is a don't care for the remainder of the write cycle.
7. $\overline{OE}$ is asynchronous and is not sampled with the clock rise. It is masked internally during write cycles.
   During a read cycle all data bits are tristate when $\overline{OE}$ is inactive or when the device is deselected, and all data bits behave as output when $\overline{OE}$ is active (LOW).

Truth Table for Read/Write

The Truth Table for Read/Write for part CY7C1325G is as follows. [8]

Function	$\overline{GW}$	$\overline{BWE}$	$\overline{BW_B}$	$\overline{BW_A}$
Read	H	H	X	X
Read	H	L	H	H
Write byte A – (DQ_A and DQP_A)	H	L	H	L
Write byte B – (DQ_B and DQP_B)	H	L	L	H
Write all bytes	H	L	L	L
Write all bytes	L	X	X	X

Note
8. X = “Don’t Care.” H = Logic HIGH, L = Logic LOW.

Maximum Ratings

Exceeding maximum ratings may shorten the useful life of the device. User guidelines are not tested.

Storage temperature ..... –65 °C to +150 °C

Ambient temperature with power applied ..... –55 °C to +125 °C

Supply voltage on V_{DD} relative to GND .....–0.5 V to +4.6 V

Supply voltage on V_{DDQ} relative to GND ..... –0.5 V to +V_{DD}

DC voltage applied to outputs in tristate .....–0.5 V to V_{DDQ} + 0.5 V

DC input voltage .....–0.5 V to V_{DD} + 0.5 V

Current into outputs (LOW) ..... 20 mA

Static discharge voltage (per MIL-STD-883, method 3015) ..... > 2001 V

Latch-up current ..... > 200 mA

Operating Range

Range	Ambient Temperature	V_{DD}	V_{DDQ}
Commercial	0 °C to +70 °C	3.3 V – 5% / + 10%	2.5 V – 5% to V_{DD}

Neutron Soft Error Immunity

Parameter	Description	Test Conditions	Typ	Max*	Unit
LSBU	Logical single bit upsets	25 °C	361	394	FIT/ Mb
LMBU	Logical multi bit upsets	25 °C	0	0.01	FIT/ Mb
SEL	Single event latch up	85 °C	0	0.1	FIT/ Dev

** No LMBU or SEL events occurred during testing*; this column represents a statistical χ^2, 95% confidence limit calculation. For more details refer to Application Note AN54908 "Accelerated Neutron SER Testing and Calculation of Terrestrial Failure Rates".

Electrical Characteristics

Over the Operating Range

Parameter [9, 10]	Description	Test Conditions		Min	Max	Unit
V_{DD}	Power supply voltage			3.135	3.6	V
V_{DDQ}	I/O supply voltage			2.375	V_{DD}	V
V_{OH}	Output HIGH voltage	for 3.3 V I/O, I_{OH} = –4.0 mA		2.4	–	V
		for 2.5 V I/O, I_{OH} = –1.0 mA		2.0	–	V
V_{OL}	Output LOW voltage	for 3.3 V I/O, I_{OL} = 8.0 mA		–	0.4	V
		for 2.5 V I/O, I_{OL} = 1.0 mA		–	0.4	V
V_{IH}	Input HIGH voltage	for 3.3 V I/O		2.0	V_{DD} + 0.3	V
		for 2.5 V I/O		1.7	V_{DD} + 0.3	V
V_{IL}	Input LOW voltage[9]	for 3.3 V I/O		–0.3	0.8	V
		for 2.5 V I/O		–0.3	0.7	V
I_X	Input leakage current except ZZ and MODE	GND ≤ V_I ≤ V_{DDQ}		–5	5	µA
	Input current of MODE	Input = V_{SS}		–30	–	µA
		Input = V_{DD}		–	5	µA
	Input current of ZZ	Input = V_{SS}		–5	–	µA
		Input = V_{DD}		–	30	µA
I_{OZ}	Output leakage current	GND ≤ V_I ≤ V_{DDQ}, output disabled		–5	5	µA
I_{DD}	V_{DD} operating supply current	V_{DD} = Max, I_{OUT} = 0 mA, f = f_{MAX}= 1/t_{CYC}	7.5 ns cycle, 133 MHz	–	225	mA

Notes

9. Overshoot: $V_{IH(AC)}$ < V_{DD} + 1.5 V (Pulse width less than t_{CYC}/2), undershoot: $V_{IL(AC)}$ > –2 V (Pulse width less than t_{CYC}/2).
10. $T_{power\ up}$: Assumes a linear ramp from 0 V to $V_{DD(min)}$ within 200 ms. During this time V_{IH} < V_{DD} and V_{DDQ} ≤ V_{DD}.

Electrical Characteristics *(continued)*

Over the Operating Range

Parameter [9, 10]	Description	Test Conditions		Min	Max	Unit
I_{SB1}	Automatic CE power-down current – TTL inputs	Max V_{DD}, device deselected, $V_{IN} \geq V_{IH}$ or $V_{IN} \leq V_{IL}$, f = f_{MAX}, inputs switching	7.5 ns cycle, 133 MHz	–	90	mA
I_{SB2}	Automatic CE power-down current – CMOS inputs	Max V_{DD}, device deselected, $V_{IN} \geq V_{DD} - 0.3$ V or $V_{IN} \leq 0.3$ V, f = 0, inputs static	7.5 ns cycle, 133 MHz	–	40	mA
I_{SB3}	Automatic CE power-down current – CMOS inputs	Max V_{DD}, device deselected, $V_{IN} \geq V_{DDQ} - 0.3$ V or $V_{IN} \leq 0.3$ V, f = f_{MAX}, inputs switching	7.5 ns cycle, 133 MHz	–	75	mA
I_{SB4}	Automatic CE power-down current – TTL inputs	Max V_{DD}, device deselected, $V_{IN} \geq V_{DD} - 0.3$ V or $V_{IN} \leq 0.3$ V, f = 0, inputs static	7.5 ns cycle, 133 MHz	–	45	mA

Capacitance

Parameter [11]	Description	Test Conditions	100-pin TQFP Max	Unit
C_{IN}	Input capacitance	T_A = 25 °C, f = 1 MHz, V_{DD} = 3.3 V, V_{DDQ} = 3.3 V	5	pF
C_{CLK}	Clock input capacitance		5	pF
$C_{I/O}$	Input/Output capacitance		5	pF

Thermal Resistance

Parameter [11]	Description	Test Conditions	100-pin TQFP Package	Unit
Θ_{JA}	Thermal resistance (junction to ambient)	Test conditions follow standard test methods and procedures for measuring thermal impedance, per EIA/JESD51.	30.32	°C/W
Θ_{JC}	Thermal resistance (junction to case)		6.85	°C/W

Note
11. Tested initially and after any design or process change that may affect these parameters.

AC Test Loads and Waveforms

Figure 2. AC Test Loads and Waveforms

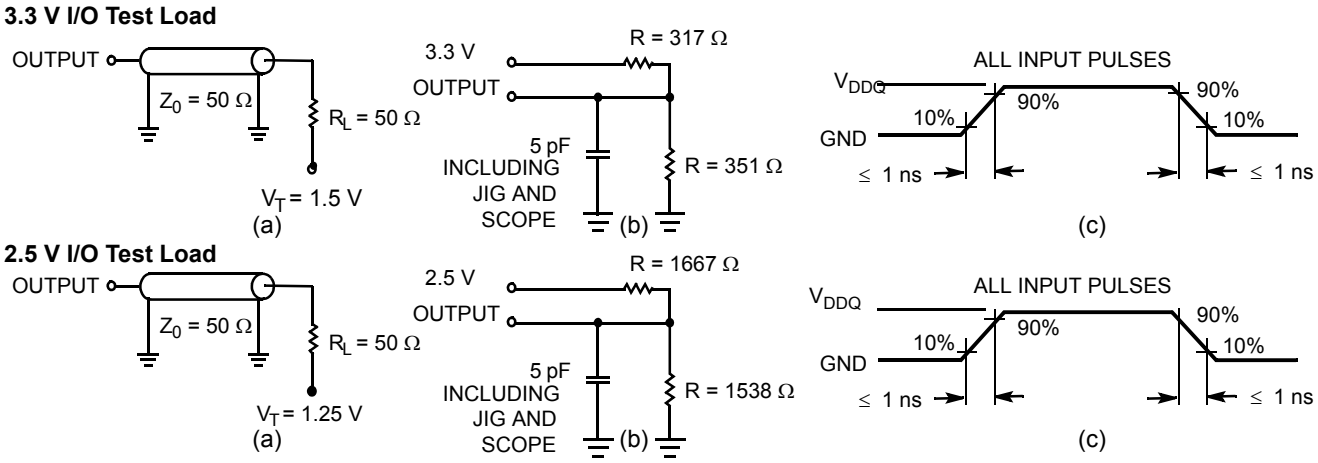

Switching Characteristics

Over the Operating Range

Parameter [12, 13]	Description	-133		Unit
		Min	Max	
t_{POWER}	V_{DD}(typical) to the first access [14]	1	–	ms
Clock				
t_{CYC}	Clock cycle time	7.5	–	ns
t_{CH}	Clock HIGH	2.5	–	ns
t_{CL}	Clock LOW	2.5	–	ns
Output Times				
t_{CDV}	Data output valid after CLK rise	–	6.5	ns
t_{DOH}	Data output hold after CLK rise	2.0	–	ns
t_{CLZ}	Clock to low Z [15, 16, 17]	0	–	ns
t_{CHZ}	Clock to high Z [15, 16, 17]	–	3.5	ns
t_{OEV}	$\overline{OE}$ LOW to output valid	–	3.5	ns
t_{OELZ}	$\overline{OE}$ LOW to output low Z [15, 16, 17]	0	–	ns
t_{OEHZ}	$\overline{OE}$ HIGH to output high Z [15, 16, 17]	–	3.5	ns
Setup Times				
t_{AS}	Address setup before CLK rise	1.5	–	ns
t_{ADS}	$\overline{ADSP}$, $\overline{ADSC}$ setup before CLK rise	1.5	–	ns
t_{ADVS}	$\overline{ADV}$ setup before CLK rise	1.5	–	ns
t_{WES}	$\overline{GW}$, $\overline{BWE}$, $\overline{BW_X}$ setup before CLK rise	1.5	–	ns
t_{DS}	Data input setup before CLK rise	1.5	–	ns
t_{CES}	Chip enable setup	1.5	–	ns
Hold Times				
t_{AH}	Address hold after CLK rise	0.5	–	ns
t_{ADH}	$\overline{ADSP}$, $\overline{ADSC}$ hold after CLK rise	0.5	–	ns
t_{WEH}	$\overline{GW}$, $\overline{BWE}$, $\overline{BW_X}$ hold after CLK rise	0.5	–	ns
t_{ADVH}	$\overline{ADV}$ hold after CLK rise	0.5	–	ns
t_{DH}	Data input hold after CLK rise	0.5	–	ns
t_{CEH}	Chip enable hold after CLK rise	0.5	–	ns

Notes

12. Timing reference level is 1.5 V when V_{DDQ} = 3.3 V and is 1.25 V when V_{DDQ} = 2.5 V.
13. Test conditions shown in (a) of Figure 2 on page 12 unless otherwise noted.
14. This part has a voltage regulator internally; t_{POWER} is the time that the power needs to be supplied above $V_{DD(minimum)}$ initially before a read or write operation can be initiated.
15. t_{CHZ}, t_{CLZ}, t_{OELZ}, and t_{OEHZ} are specified with AC test conditions shown in part (b) of Figure 2 on page 12. Transition is measured ± 200 mV from steady-state voltage.
16. At any voltage and temperature, t_{OEHZ} is less than t_{OELZ} and t_{CHZ} is less than t_{CLZ} to eliminate bus contention between SRAMs when sharing the same data bus. These specifications do not imply a bus contention condition, but reflect parameters guaranteed over worst case user conditions. Device is designed to achieve high Z prior to low Z under the same system conditions.
17. This parameter is sampled and not 100% tested.

Timing Diagrams

Figure 3. Read Cycle Timing [18]

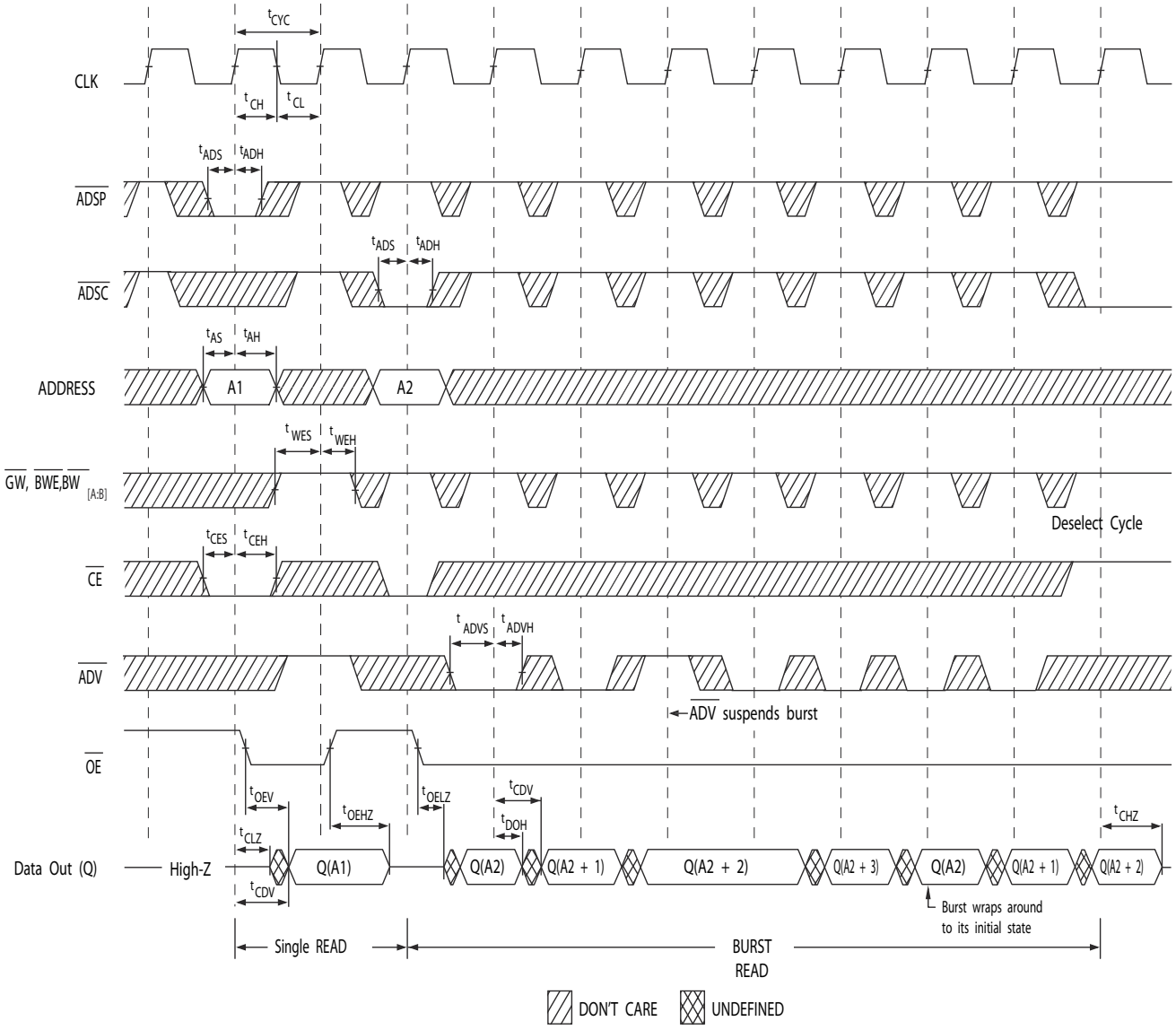

Note
18. On this diagram, when $\overline{CE}$ is LOW: $\overline{CE}_1$ is LOW, CE_2 is HIGH and $\overline{CE}_3$ is LOW. When $\overline{CE}$ is HIGH: $\overline{CE}_1$ is HIGH or CE_2 is LOW or $\overline{CE}_3$ is HIGH.

Timing Diagrams *(continued)*

Figure 4. Write Cycle Timing [19, 20]

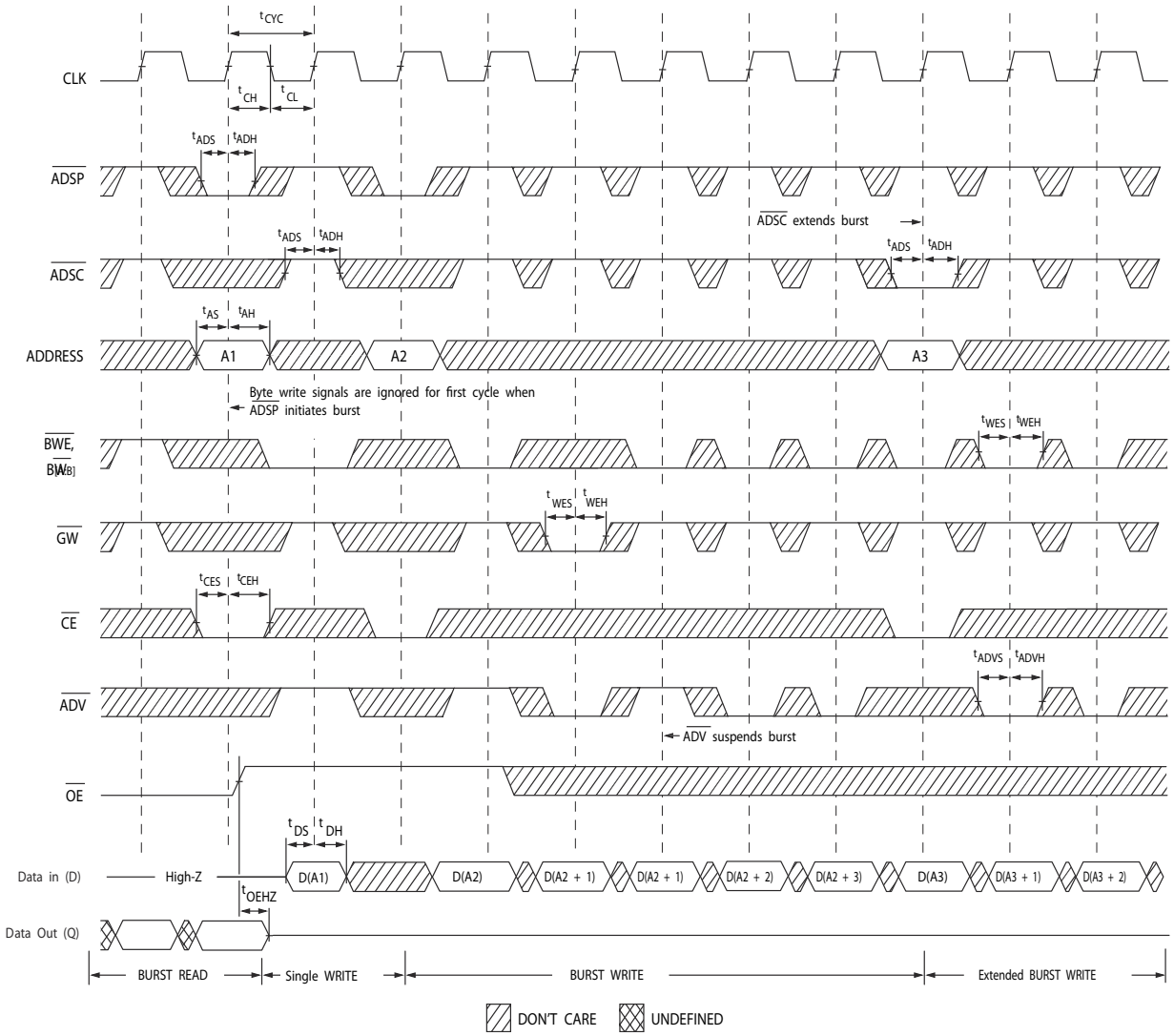

Notes
19. On this diagram, when $\overline{CE}$ is LOW: $\overline{CE}_1$ is LOW, CE_2 is HIGH and $\overline{CE}_3$ is LOW. When $\overline{CE}$ is HIGH: $\overline{CE}_1$ is HIGH or CE_2 is LOW or $\overline{CE}_3$ is HIGH.
20. Full width write can be initiated by either $\overline{GW}$ LOW; or by $\overline{GW}$ HIGH, $\overline{BWE}$ LOW and $\overline{BW}_{[A:B]}$ LOW.

Timing Diagrams *(continued)*

Figure 5. Read/Write Timing [21, 22, 23]

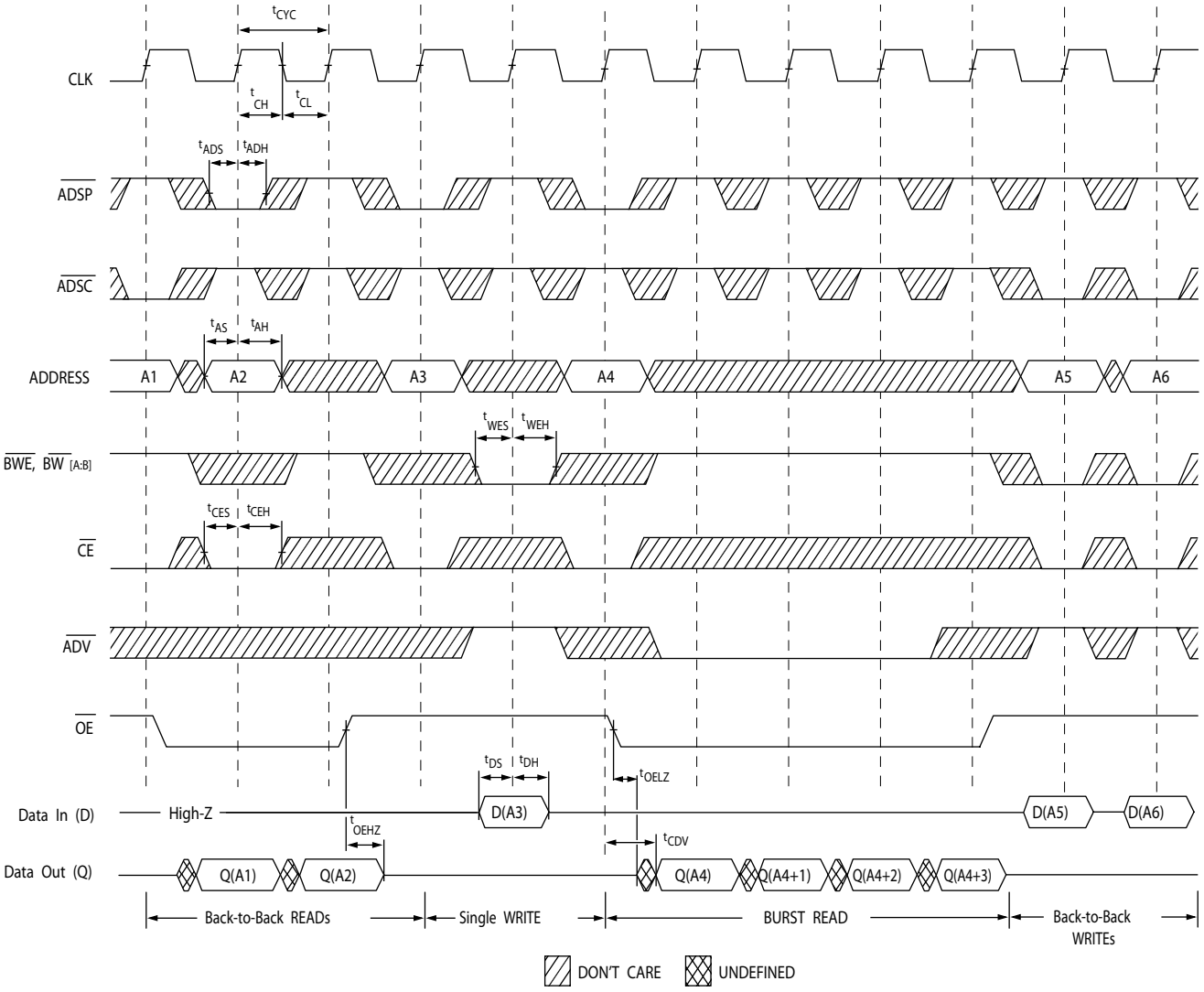

Notes
21. On this diagram, when $\overline{CE}$ is LOW: $\overline{CE}_1$ is LOW, CE_2 is HIGH and $\overline{CE}_3$ is LOW. When $\overline{CE}$ is HIGH: $\overline{CE}_1$ is HIGH or CE_2 is LOW or $\overline{CE}_3$ is HIGH.
22. The data bus (Q) remains in High Z following a WRITE cycle, unless a new read access is initiated by $\overline{ADSP}$ or $\overline{ADSC}$.
23. $\overline{GW}$ is HIGH.

Timing Diagrams *(continued)*

Figure 6. ZZ Mode Timing [24, 25]

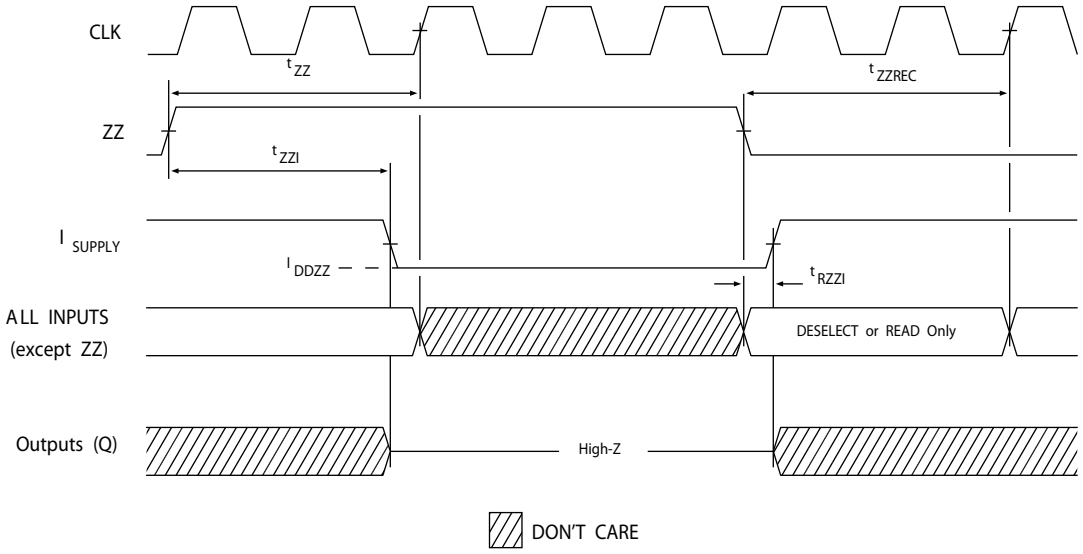

Notes
24. Device must be deselected when entering ZZ mode. See Cycle Descriptions table for all possible signal conditions to deselect the device.
25. DQs are in High Z when exiting ZZ sleep mode.

Ordering Information

The table below contains only the parts that are currently available. If you don't see what you are looking for, please contact your local sales representative. For more information, visit the Cypress website at www.cypress.com and refer to the product summary page at http://www.cypress.com/products.

Cypress maintains a worldwide network of offices, solution centers, manufacturer's representatives and distributors. To find the office closest to you, visit us at http://www.cypress.com/go/datasheet/offices.

Speed (MHz)	Ordering Code	Package Diagram	Part and Package Type	Operating Range
133	CY7C1325G-133AXC	51-85050	100-pin TQFP (14 × 20 × 1.4 mm) Pb-free	Commercial

Ordering Code Definitions

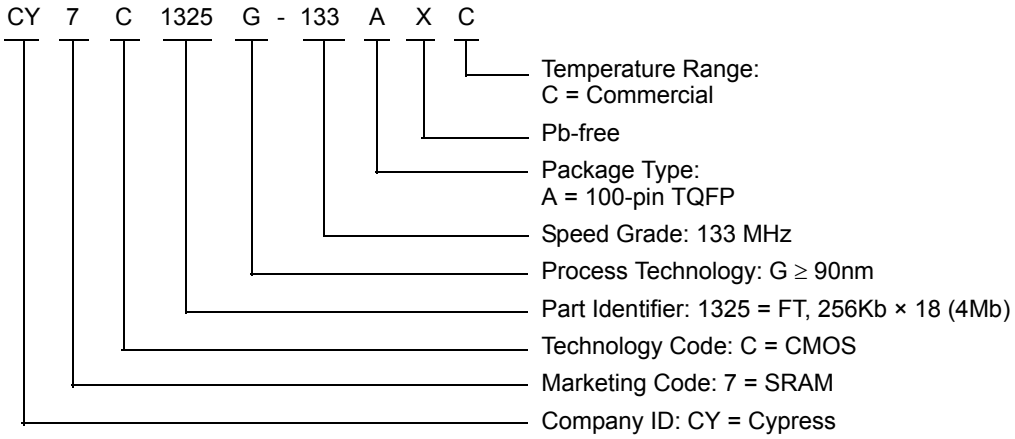

Package Diagrams

Figure 7. 100-pin TQFP (16 × 22 × 1.6 mm) A100RA Package Outline, 51-85050

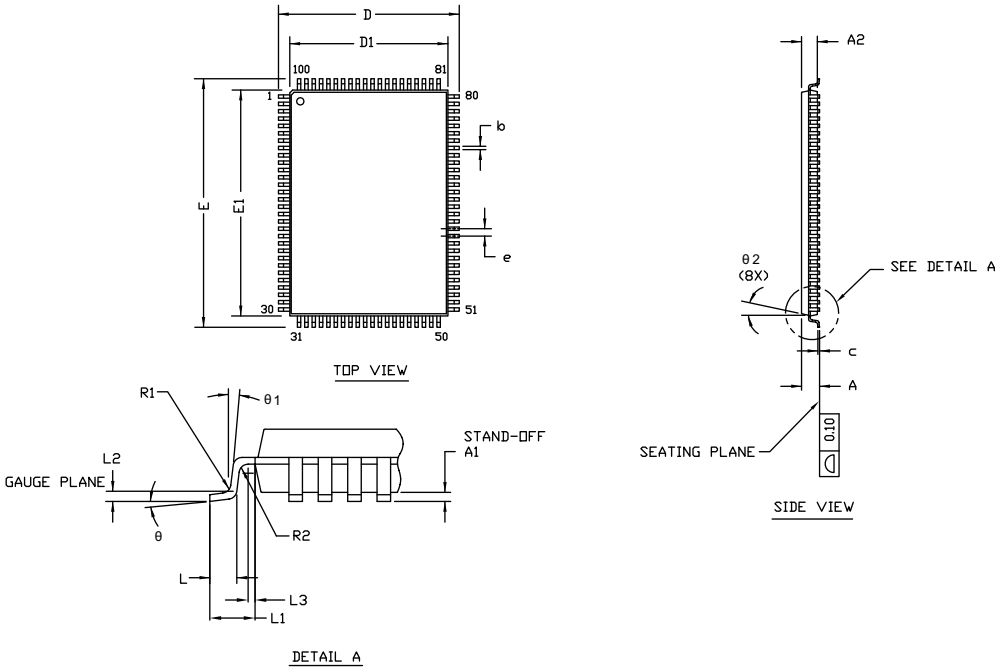

SYMBOL	DIMENSIONS		
	MIN.	NOM.	MAX.
A	—	—	1.60
A1	0.05	—	0.15
A2	1.35	1.40	1.45
D	15.80	16.00	16.20
D1	13.90	14.00	14.10
E	21.80	22.00	22.20
E1	19.90	20.00	20.10
R1	0.08	—	0.20
R2	0.08	—	0.20
θ	0°	—	7°
θ1	0°	—	—
θ2	11°	12°	13°
c	—	—	0.20
b	0.22	0.30	0.38
L	0.45	0.60	0.75
L1	1.00 REF		
L2	0.25 BSC		
L3	0.20	—	—
e	0.65 TYP		

NOTE:
1. ALL DIMENSIONS ARE IN MILLIMETERS.
2. BODY LENGTH DIMENSION DOES NOT INCLUDE MOLD PROTRUSION/END FLASH. MOLD PROTRUSION/END FLASH SHALL NOT EXCEED 0.0098 in (0.25 mm) PER SIDE. BODY LENGTH DIMENSIONS ARE MAX PLASTIC BODY SIZE INCLUDING MOLD MISMATCH.
3. JEDEC SPECIFICATION NO. REF: MS-026.

51-85050 *F

Acronyms

Acronym	Description
CMOS	Complementary Metal Oxide Semiconductor
$\overline{CE}$	Chip Enable
$\overline{CEN}$	Clock Enable
EIA	Electronic Industries Alliance
I/O	Input/Output
JEDEC	Joint Electron Devices Engineering Council
$\overline{OE}$	Output Enable
SRAM	Static Random Access Memory
TQFP	Thin Quad Flat Pack
TTL	Transistor-Transistor Logic
$\overline{WE}$	Write Enable

Document Conventions

Units of Measure

Symbol	Unit of Measure
°C	degree Celsius
MHz	megahertz
µA	microampere
mA	milliampere
mm	millimeter
ms	millisecond
mV	millivolt
ns	nanosecond
Ω	ohm
%	percent
pF	picofarad
V	volt
W	watt

Errata

This section describes the Ram9 Sync ZZ pin issue. Details include trigger conditions, the devices affected, proposed workaround and silicon revision applicability. Please contact your local Cypress sales representative if you have further questions.

Part Numbers Affected

Density & Revision	Package Type	Operating Range
4Mb-Ram9 Synchronous SRAMs: CY7C132*G	100-pin TQFP	Commercial

Product Status

All of the devices in the Ram9 4Mb Sync family are qualified and available in production quantities.

Ram9 Sync ZZ Pin Issues Errata Summary

The following table defines the errata applicable to available Ram9 4Mb Sync family devices.

Item	Issues	Description	Device	Fix Status
1.	ZZ Pin	When asserted HIGH, the ZZ pin places device in a “sleep” condition with data integrity preserved.The ZZ pin currently does not have an internal pull-down resistor and hence cannot be left floating externally by the user during normal mode of operation.	4M-Ram9 (90nm)	For the 4M Ram9 (90 nm) devices, there is no plan to fix this issue.

1. ZZ Pin Issue

- PROBLEM DEFINITION
  The problem occurs only when the device is operated in the normal mode with ZZ pin left floating. The ZZ pin on the SRAM device does not have an internal pull-down resistor. Switching noise in the system may cause the SRAM to recognize a HIGH on the ZZ input, which may cause the SRAM to enter sleep mode. This could result in incorrect or undesirable operation of the SRAM.

- TRIGGER CONDITIONS
  Device operated with ZZ pin left floating.

- SCOPE OF IMPACT
  When the ZZ pin is left floating, the device delivers incorrect data.

- WORKAROUND
  Tie the ZZ pin externally to ground.

- FIX STATUS
  For the 4M Ram9 (90 nm) devices, there is no plan to fix this issue.

Document History Page

Document Title: CY7C1325G, 4-Mbit (256K × 18) Flow-Through Sync SRAM Document Number: 38-05518				
Rev.	**ECN**	**Orig. of Change**	**Submission Date**	**Description of Change**
**	224366	RKF	See ECN	New data sheet.
*A	283775	VBL	See ECN	Updated Features (Removed 66 MHz frequency related information). Updated Selection Guide (Removed 66 MHz frequency related information). Updated Electrical Characteristics (Removed 66 MHz frequency related information). Updated Switching Characteristics (Removed 66 MHz frequency related information). Updated Ordering Information (Updated part numbers (Removed 66 MHz frequency related information, changed TQFP package to Pb-Free TQFP, added BG Pb-Free package)).
*B	333626	SYT	See ECN	Updated Features (Removed 117 MHz frequency related information). Updated Selection Guide (Removed 117 MHz frequency related information). Updated Pin Configurations (Modified Address Expansion balls in the pinouts for 100-pin TQFP and 119-ball BGA Packages as per JEDEC standards). Updated Pin Definitions. Updated Functional Overview (Updated ZZ Mode Electrical Characteristics (Replaced “Snooze” with “Sleep”)). Updated Truth Table (Replaced “Snooze” with “Sleep”). Updated Electrical Characteristics (Updated Test Conditions of V_{OL}, V_{OH} parameters, removed 117 MHz frequency related information). Updated Thermal Resistance (Replaced values of Θ_{JA} and Θ_{JC} parameters from TBD to their respective values). Updated Switching Characteristics (Removed 117 MHz frequency related information). Updated Ordering Information (By shading and unshading MPNs as per availability, changed the package name for 100-pin TQFP from A100RA to A101, removed comment on the availability of BG Pb-Free package).
*C	418633	RXU	See ECN	Changed status from Preliminary to Final. Changed address of Cypress Semiconductor Corporation from “3901 North First Street” to “198 Champion Court” Updated Electrical Characteristics (Updated Note 10 (Modified test condition from $V_{DDQ} < V_{DD}$ to $V_{DDQ} \leq V_{DD}$, changed “Input Load Current except ZZ and MODE” to “Input Leakage Current except ZZ and MODE”). Updated Ordering Information (Updated part numbers, replaced Package Name column with Package Diagram in the Ordering Information table). Updated Package Diagrams (spec 51-85050 (changed revision from *A to *B)).
*D	480124	VKN	See ECN	Updated Maximum Ratings (Added the Maximum Rating for Supply Voltage on V_{DDQ} Relative to GND). Updated Ordering Information (Updated part numbers).
*E	2756998	VKN	08/28/09	Added Neutron Soft Error Immunity. Updated Ordering Information (By including parts that are available, and modified the disclaimer for the Ordering information).
*F	3036073	NJY	09/22/2010	Added Ordering Code Definitions. Updated Package Diagrams. Added Acronyms and Units of Measure. Minor edits. Updated to new template.
*G	3052903	NJY	10/08/10	Updated Ordering Information (Removed the following pruned part from the ordering information table namely CY7C1325G-100AXI).
*H	3208774	NJY	03/29/2011	Updated Ordering Information (Updated part numbers). Updated Package Diagrams.

Document History Page *(continued)*

Document Title: CY7C1325G, 4-Mbit (256K × 18) Flow-Through Sync SRAM Document Number: 38-05518				
Rev.	**ECN**	**Orig. of Change**	**Submission Date**	**Description of Change**
*I	3357114	PRIT	08/29/2011	Updated Package Diagrams. Completing Sunset Review.
*J	3619154	PRIT	05/16/2012	Updated Features (Removed 119-ball BGA Package related information). Updated Functional Description (Removed the Note “For best practice recommendations, refer to the Cypress application note “*System Design Guidelines*” on www.cypress.com.” and its reference). Updated Selection Guide (Removed 100 MHz frequency related information). Updated Pin Configurations (Removed 119-ball BGA Package related information). Updated Operating Range (Removed Industrial Temperature Range). Updated Electrical Characteristics (Removed 100 MHz frequency related information). Updated Capacitance (Removed 119-ball BGA Package related information). Updated Thermal Resistance (Removed 119-ball BGA Package related information). Updated Switching Characteristics (Removed 100 MHz frequency related information). Updated Package Diagrams (Removed 119-ball BGA Package related information (spec 51-85115)).
*K	3766472	PRIT	10/04/2012	No technical updates. Completing Sunset Review.
*L	3980577	PRIT	04/24/2013	Added Errata.
*M	4039228	PRIT	06/26/2013	Added Errata Footnotes. Updated to new template.
*N	4149237	PRIT	10/07/2013	Updated Errata.
*O	4540469	PRIT	10/16/2014	Updated Package Diagrams: spec 51-85050 – Changed revision from *D to *E. Completing Sunset Review.
*P	4574263	PRIT	11/19/2014	Updated Functional Description: Added “For a complete list of related documentation, click here.” at the end.
*Q	5331040	PRIT	06/30/2016	Updated Truth Table. Updated to new template.
*R	5510101	PRIT	11/04/2016	Updated Package Diagrams: spec 51-85050 – Changed revision from *E to *F. Updated to new template. Completing Sunset Review.

Sales, Solutions, and Legal Information

Worldwide Sales and Design Support

Cypress maintains a worldwide network of offices, solution centers, manufacturer's representatives, and distributors. To find the office closest to you, visit us at Cypress Locations.

Products

ARM® Cortex® Microcontrollers	cypress.com/arm
Automotive	cypress.com/automotive
Clocks & Buffers	cypress.com/clocks
Interface	cypress.com/interface
Internet of Things	cypress.com/iot
Lighting & Power Control	cypress.com/powerpsoc
Memory	cypress.com/memory
PSoC	cypress.com/psoc
Touch Sensing	cypress.com/touch
USB Controllers	cypress.com/usb
Wireless/RF	cypress.com/wireless

PSoC®Solutions

PSoC 1 | PSoC 3 | PSoC 4 | PSoC 5LP

Cypress Developer Community

Forums | Projects | Video | Blogs | Training | Components

Technical Support

cypress.com/support

© Cypress Semiconductor Corporation, 2004-2016. This document is the property of Cypress Semiconductor Corporation and its subsidiaries, including Spansion LLC ("Cypress"). This document, including any software or firmware included or referenced in this document ("Software"), is owned by Cypress under the intellectual property laws and treaties of the United States and other countries worldwide. Cypress reserves all rights under such laws and treaties and does not, except as specifically stated in this paragraph, grant any license under its patents, copyrights, trademarks, or other intellectual property rights. If the Software is not accompanied by a license agreement and you do not otherwise have a written agreement with Cypress governing the use of the Software, then Cypress hereby grants you a personal, non-exclusive, nontransferable license (without the right to sublicense) (1) under its copyright rights in the Software (a) for Software provided in source code form, to modify and reproduce the Software solely for use with Cypress hardware products, only internally within your organization, and (b) to distribute the Software in binary code form externally to end users (either directly or indirectly through resellers and distributors), solely for use on Cypress hardware product units, and (2) under those claims of Cypress's patents that are infringed by the Software (as provided by Cypress, unmodified) to make, use, distribute, and import the Software solely for use with Cypress hardware products. Any other use, reproduction, modification, translation, or compilation of the Software is prohibited.

TO THE EXTENT PERMITTED BY APPLICABLE LAW, CYPRESS MAKES NO WARRANTY OF ANY KIND, EXPRESS OR IMPLIED, WITH REGARD TO THIS DOCUMENT OR ANY SOFTWARE OR ACCOMPANYING HARDWARE, INCLUDING, BUT NOT LIMITED TO, THE IMPLIED WARRANTIES OF MERCHANTABILITY AND FITNESS FOR A PARTICULAR PURPOSE. To the extent permitted by applicable law, Cypress reserves the right to make changes to this document without further notice. Cypress does not assume any liability arising out of the application or use of any product or circuit described in this document. Any information provided in this document, including any sample design information or programming code, is provided only for reference purposes. It is the responsibility of the user of this document to properly design, program, and test the functionality and safety of any application made of this information and any resulting product. Cypress products are not designed, intended, or authorized for use as critical components in systems designed or intended for the operation of weapons, weapons systems, nuclear installations, life-support devices or systems, other medical devices or systems (including resuscitation equipment and surgical implants), pollution control or hazardous substances management, or other uses where the failure of the device or system could cause personal injury, death, or property damage ("Unintended Uses"). A critical component is any component of a device or system whose failure to perform can be reasonably expected to cause the failure of the device or system, or to affect its safety or effectiveness. Cypress is not liable, in whole or in part, and you shall and hereby do release Cypress from any claim, damage, or other liability arising from or related to all Unintended Uses of Cypress products. You shall indemnify and hold Cypress harmless from and against all claims, costs, damages, and other liabilities, including claims for personal injury or death, arising from or related to any Unintended Uses of Cypress products.

Cypress, the Cypress logo, Spansion, the Spansion logo, and combinations thereof, PSoC, CapSense, EZ-USB, F-RAM, and Traveo are trademarks or registered trademarks of Cypress in the United States and other countries. For a more complete list of Cypress trademarks, visit cypress.com. Other names and brands may be claimed as property of their respective owners.