CY7C027V/027AV/028V
CY7C037AV/038V

3.3 V 32 K / 64 K × 16 / 18 Dual-Port Static RAM

Features

- True dual-ported memory cells which allow simultaneous access of the same memory location
- 32K x 16 organization (CY7C027V/027AV [1])
- 64K x 16 organization (CY7C028V)
- 32K x 18 organization (CY7C037AV)
- 64K x 18 organization (CY7C038V)
- 0.35 micron Complementary metal oxide semiconductor (CMOS) for optimum speed and power
- High speed access: 15, 20, and 25 ns
- Low operating power
- Active: I_{CC} = 115 mA (typical)
- Standby: I_{SB3} = 10 µA (typical)
- Fully asynchronous operation
- Automatic power-down
- Expandable data bus to 32/36 bits or more using Master/Slave chip select when using more than one device
- On-chip arbitration logic
- Semaphores included to permit software handshaking between ports
- $\overline{INT}$ flag for port-to-port communication
- Separate upper-byte and lower-byte control
- Dual chip enables
- Pin select for Master or Slave
- Commercial and Industrial temperature ranges
- 100-pin Pb-free Thin quad plastic flatpack (TQFP) and 100-pin TQFP

Logic Block Diagram

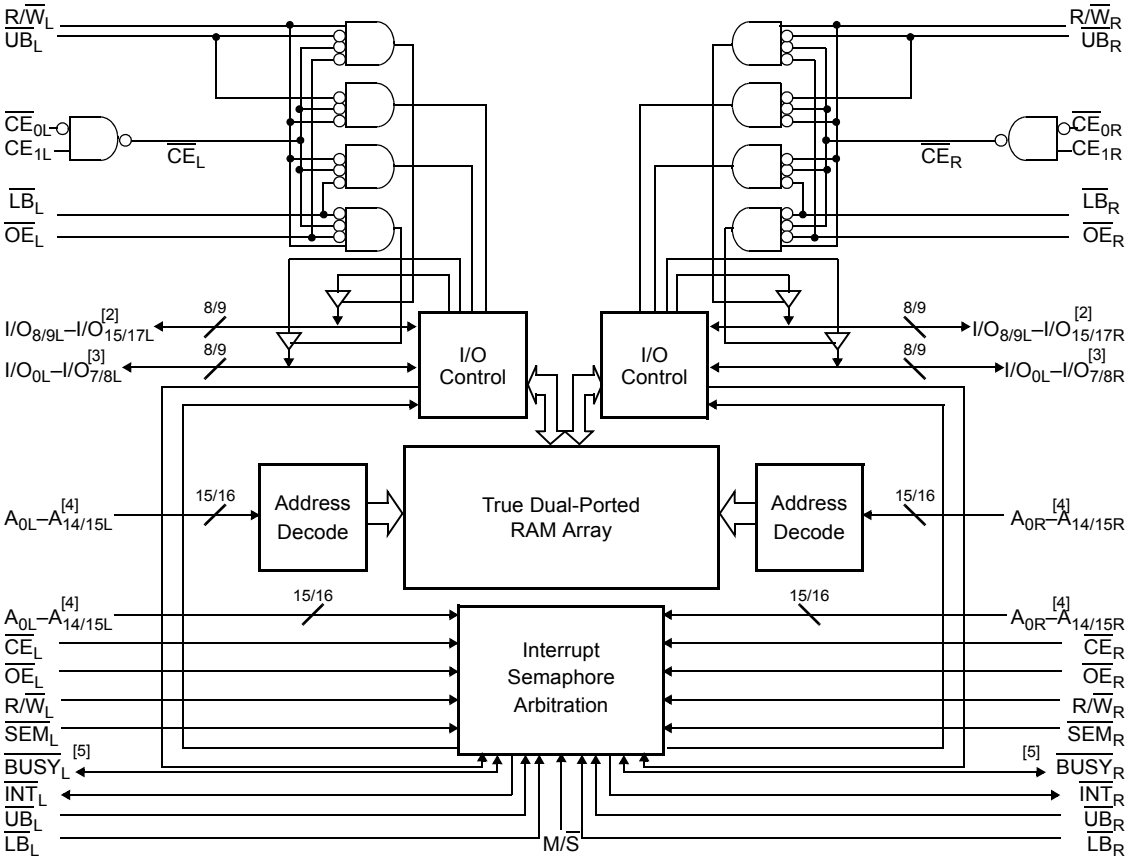

Notes
1. CY7C027V, and CY7C027AV are functionally identical.
2. I/O_8–I/O_{15} for x16 devices; I/O_9–I/O_{17} for x18 devices.
3. I/O_0–I/O_7 for x16 devices; I/O_0–I/O_8 for x18 devices.
4. A_0–A_{14} for 32K; A_0–A_{15} for 64K devices.
5. $\overline{BUSY}$ is an output in master mode and an input in slave mode.

Contents

Pin Configurations **3**
Selection Guide **5**
Pin Definitions **5**
Architecture **5**
Functional Description **5**
Write Operation 5
Read Operation 6
Interrupts 6
Busy 6
Master/Slave 6
Semaphore Operation 6
Maximum Ratings **7**
Operating Range **7**
Electrical Characteristics **7**
Capacitance **7**
AC Test Loads and Waveforms **8**
Data Retention Mode **8**
Timing **8**
Switching Characteristics **9**
Switching Waveforms **11**
Non-Contending Read/Write **17**
Interrupt Operation Example **17**
Semaphore Operation Example **18**
Ordering Information **19**
32 K × 16 3.3 V Asynchronous Dual-Port SRAM 19
64 K × 16 3.3 V Asynchronous Dual-Port SRAM 19
32 K × 18 3.3 V Asynchronous Dual-Port SRAM 19
64 K × 18 3.3 V Asynchronous Dual-Port SRAM 19
Ordering Code Definitions 20
Package Diagram **21**
Acronyms **22**
Document Conventions **22**
Units of Measure 22
Document History Page **23**
Sales, Solutions, and Legal Information **24**
Worldwide Sales and Design Support 24
Products 24
PSoC Solutions 24

Pin Configurations

Figure 1. 100-pin TQFP pinout (Top View)

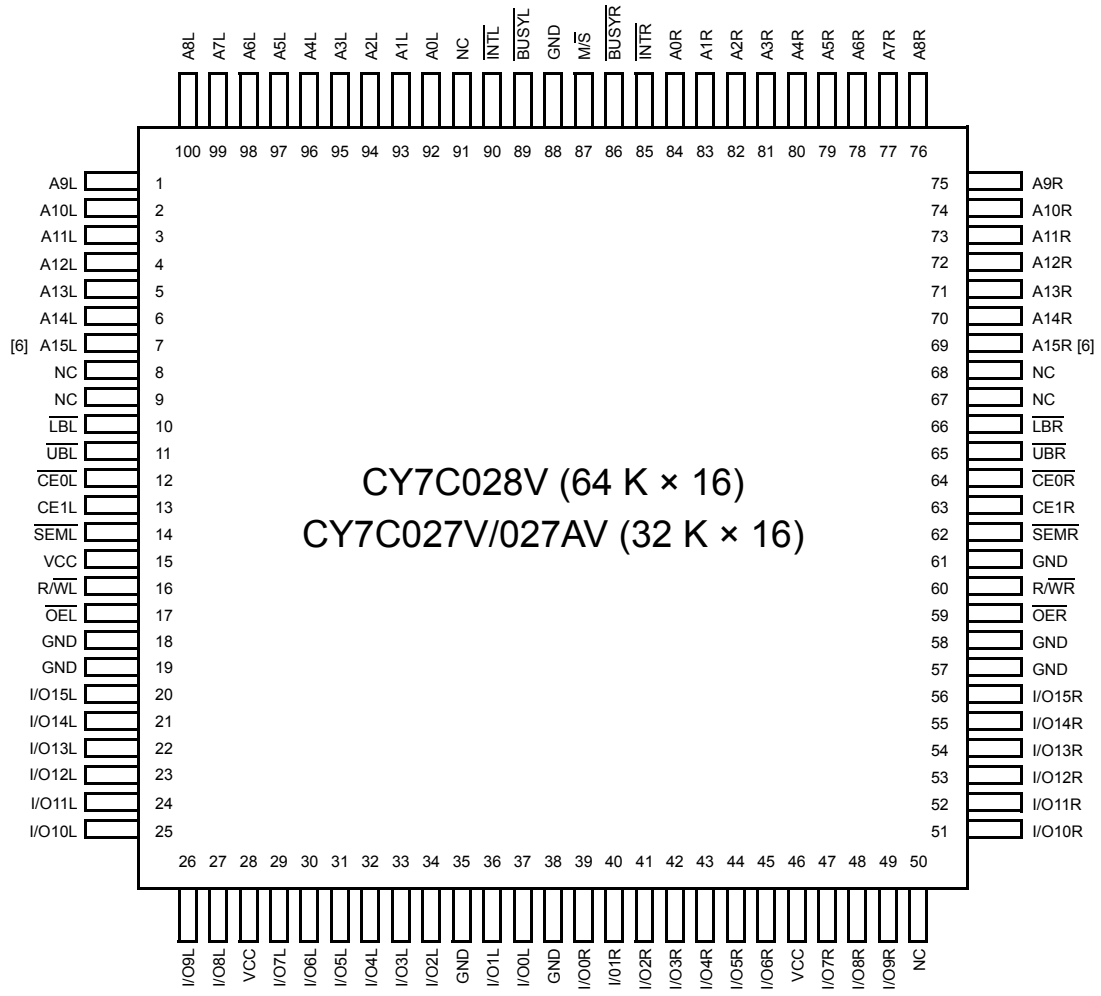

Note
6. This pin is NC for CY7C027V/027AV.

Pin Configurations(continued)

Figure 2. 100-pin TQFP pinout (Top View)

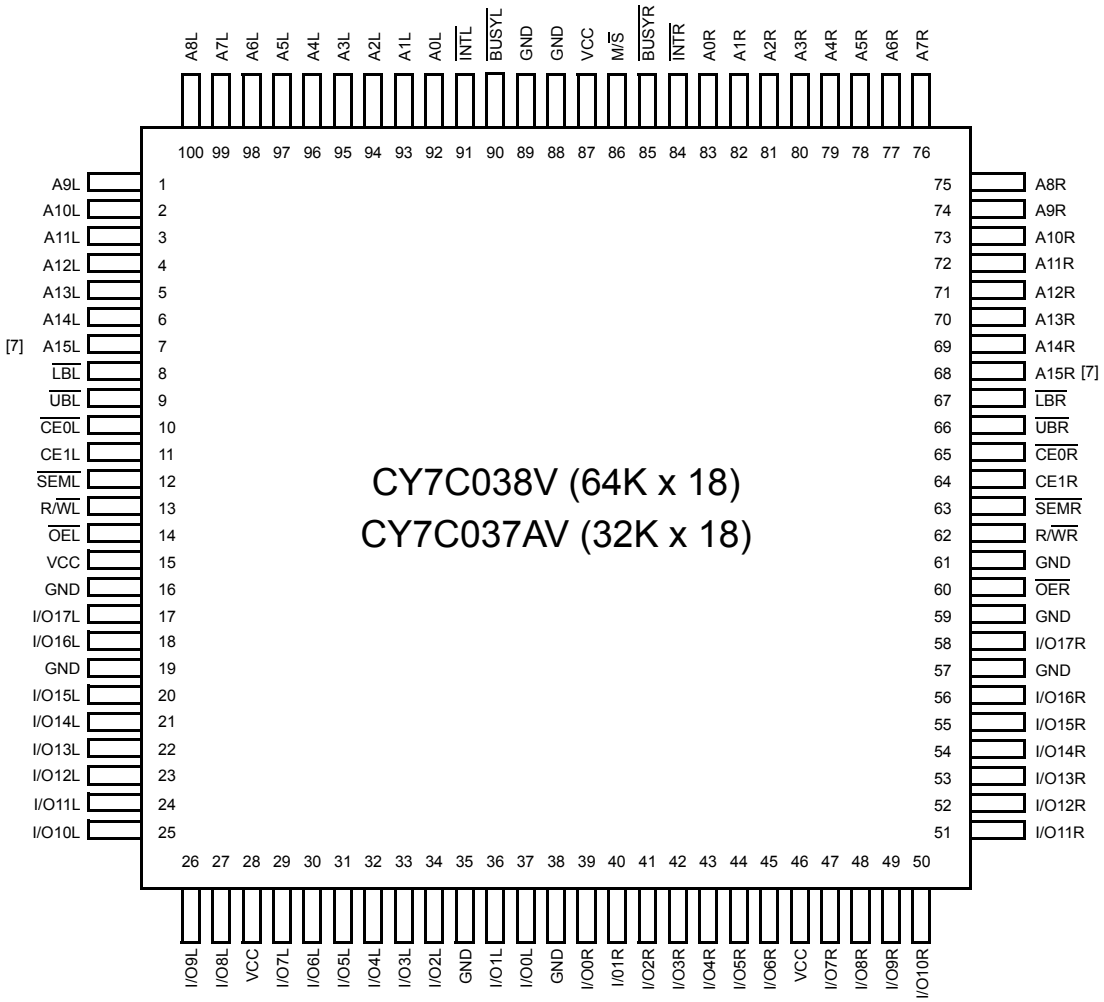

Note
7. This pin is NC for CY7C037AV.

Selection Guide

Parameter	-15	-20	-25	Unit
Maximum access time	15	20	25	ns
Typical operating current	125	120	115	mA
Typical standby current for I_{SB1} (Both ports TTL level)	35	35	30	mA
Typical standby current for I_{SB3} (Both ports CMOS level)	10	10	10	µA

Pin Definitions

Left Port	Right Port	Description
$\overline{CE}_{0L}$, CE_{1L}	$\overline{CE}_{0R}$, CE_{1R}	Chip Enable ($\overline{CE}$ is LOW when $\overline{CE}_0 \le V_{IL}$ and $CE_1 \ge V_{IH}$)
$R/\overline{W}_L$	$R/\overline{W}_R$	Read/Write Enable
$\overline{OE}_L$	$\overline{OE}_R$	Output Enable
A_{0L}–A_{15L}	A_{0R}–A_{15R}	Address (A_0–A_{14} for 32K; A_0–A_{15} for 64K devices)
I/O_{0L}–I/O_{17L}	I/O_{0R}–I/O_{17R}	Data bus input/output (I/O_0–I/O_{15} for × 16 devices; I/O_0–I/O_{17} for × 18)
$\overline{SEM}_L$	$\overline{SEM}_R$	Semaphore Enable
$\overline{UB}_L$	$\overline{UB}_R$	Upper byte select (I/O_8–I/O_{15} for × 16 devices; I/O_9–I/O_{17} for × 18 devices)
$\overline{LB}_L$	$\overline{LB}_R$	Lower byte select (I/O_0–I/O_7 for × 16 devices; I/O_0–I/O_8 for × 18 devices)
$\overline{INT}_L$	$\overline{INT}_R$	Interrupt flag
$\overline{BUSY}_L$	$\overline{BUSY}_R$	Busy flag
$M/\overline{S}$		Master or Slave select
V_{CC}		Power
GND		Ground
NC		No connect

Architecture

The CY7C027V/027AV/028V and CY7037AV/038V consist of an array of 32K and 64K words of 16 and 18 bits each of dual-port RAM cells, I/O and address lines, and control signals ($\overline{CE}$, $\overline{OE}$, $R/\overline{W}$). These control pins permit independent access for reads or writes to any location in memory. To handle simultaneous writes/reads to the same location, a $\overline{BUSY}$ pin is provided on each port. Two interrupt ($\overline{INT}$) pins can be utilized for port-to-port communication. Two semaphore ($\overline{SEM}$) control pins are used for allocating shared resources. With the $M/\overline{S}$ pin, the devices can function as a master ($\overline{BUSY}$ pins are outputs) or as a slave ($\overline{BUSY}$ pins are inputs). The devices also have an automatic power down feature controlled by $\overline{CE}$. Each port is provided with its own output enable control ($\overline{OE}$), which allows data to be read from the device.

Functional Description

The CY7C027V/027AV/028V and CY7037AV/038V are low power CMOS 32K, 64K x 16/18 dual-port static RAMs. Various arbitration schemes are included on the devices to handle situations when multiple processors access the same piece of data. Two ports are provided, permitting independent, asynchronous access for reads and writes to any location in memory. The devices can be utilized as stand-alone 16/18-bit dual-port static RAMs or multiple devices can be combined to function as a 32/36-bit or wider master/slave dual-port static RAM. An $M/\overline{S}$ pin is provided for implementing 32/36-bit or wider memory applications without the need for separate master and slave devices or additional discrete logic. Application areas include interprocessor/multiprocessor designs, communications status buffering, and dual-port video/graphics memory.

Each port has independent control pins: Chip Enable ($\overline{CE}$), Read or Write Enable ($R/\overline{W}$), and Output Enable ($\overline{OE}$). Two flags are provided on each port ($\overline{BUSY}$ and $\overline{INT}$). $\overline{BUSY}$ signals that the port is trying to access the same location currently being accessed by the other port. The interrupt flag ($\overline{INT}$) permits communication between ports or systems by means of a mail box. The semaphores are used to pass a flag, or token, from one port to the other to indicate that a shared resource is in use. The semaphore logic is comprised of eight shared latches. Only one side can control the latch (semaphore) at any time. Control of a semaphore indicates that a shared resource is in use. An automatic power down feature is controlled independently on each port by a chip select ($\overline{CE}$) pin.

The CY7C027V/027AV/028V and CY7037AV/038V are available in 100-pin Thin Quad Plastic Flatpacks (TQFP).

Write Operation

Data must be set up for a duration of t_{SD} before the rising edge of $R/\overline{W}$ to guarantee a valid write. A write operation is controlled by either the $R/\overline{W}$ pin (see Figure 7) or the $\overline{CE}$ pin (see Figure 8). Required inputs

for non-contention operations are summarized in Non-Contending Read/Write on page 17.

If a location is being written to by one port and the opposite port attempts to read that location, a port-to-port flowthrough delay must occur before the data is read on the output; otherwise the data read is not deterministic. Data is valid on the port t_{DDD} after the data is presented on the other port.

Read Operation

When reading the device, the user must assert both the $\overline{OE}$ and $\overline{CE}$ pins. Data is available t_{ACE} after $\overline{CE}$ or t_{DOE} after $\overline{OE}$ is asserted. If the user wishes to access a semaphore flag, then the $\overline{SEM}$ pin must be asserted instead of the $\overline{CE}$ pin, and $\overline{OE}$ must also be asserted.

Interrupts

The upper two memory locations may be used for message passing. The highest memory location (7FFF for the CY7C027V/037AV/027AV, FFFF for the CY7C028V/38V) is the mailbox for the right port and the second-highest memory location (7FFE for the CY7C027V/027AV/037AV, FFFE for the CY7C028V/38V) is the mailbox for the left port. When one port writes to the other port's mailbox, an interrupt is generated to the owner. The interrupt is reset when the owner reads the contents of the mailbox. The message is user defined.

Each port can read the other port's mailbox without resetting the interrupt. The active state of the busy signal (to a port) prevents the port from setting the interrupt to the winning port. Also, an active busy to a port prevents that port from reading its own mailbox and, thus, resetting the interrupt to it.

If an application does not require message passing, do not connect the interrupt pin to the processor's interrupt request input pin.

The operation of the interrupts and their interaction with Busy are summarized in Interrupt Operation Example on page 17.

Busy

The CY7C027V/027AV/028V and CY7037AV/038V provide on-chip arbitration to resolve simultaneous memory location access (contention). If both ports' $\overline{CE}$s are asserted and an address match occurs within t_{PS} of each other, the busy logic determines which port has access. If t_{PS} is violated, one port definitely gains permission to the location, but it is not predictable which port gets that permission. $\overline{BUSY}$ is asserted t_{BLA} after an address match or t_{BLC} after $\overline{CE}$ is taken LOW.

Master/Slave

A M/$\overline{S}$ pin is provided to expand the word width by configuring the device as either a master or a slave. The $\overline{BUSY}$ output of the master is connected to the $\overline{BUSY}$ input of the slave. This allows the device to interface to a master device with no external components. Writing to slave devices must be delayed until after the $\overline{BUSY}$ input has settled (t_{BLC} or t_{BLA}), otherwise, the slave chip may begin a write cycle during a contention situation. When tied HIGH, the M/$\overline{S}$ pin allows the device to be used as a master and, therefore, the $\overline{BUSY}$ line is an output. $\overline{BUSY}$ can then be used to send the arbitration outcome to a slave.

Semaphore Operation

The CY7C027V/027AV/028V and CY7037AV/038V provide eight semaphore latches, which are separate from the dual-port memory locations. Semaphores are used to reserve resources that are shared between the two ports.The state of the semaphore indicates that a resource is in use. For example, if the left port wants to request a given resource, it sets a latch by writing a zero to a semaphore location. The left port then verifies its success in setting the latch by reading it. After writing to the semaphore, $\overline{SEM}$ or $\overline{OE}$ must be deasserted for t_{SOP} before attempting to read the semaphore. The semaphore value is available $t_{SWRD} + t_{DOE}$ after the rising edge of the semaphore write. If the left port was successful (reads a zero), it assumes control of the shared resource, otherwise (reads a one) it assumes the right port has control and continues to poll the semaphore. When the right side has relinquished control of the semaphore (by writing a one), the left side succeeds in gaining control of the semaphore. If the left side no longer requires the semaphore, a one is written to cancel its request.

Semaphores are accessed by asserting $\overline{SEM}$ LOW. The $\overline{SEM}$ pin functions as a chip select for the semaphore latches ($\overline{CE}$ must remain HIGH during $\overline{SEM}$ LOW). A_{0-2} represents the semaphore address. $\overline{OE}$ and R/$\overline{W}$ are used in the same manner as a normal memory access. When writing or reading a semaphore, the other address pins have no effect.

When writing to the semaphore, only I/O_0 is used. If a zero is written to the left port of an available semaphore, a one appears at the same semaphore address on the right port. That semaphore can now only be modified by the side showing zero (the left port in this case). If the left port now relinquishes control by writing a one to the semaphore, the semaphore is set to one for both sides. However, if the right port had requested the semaphore (written a zero) while the left port had control, the right port would immediately own the semaphore as soon as the left port released it. Semaphore Operation Example on page 18 shows sample semaphore operations.

When reading a semaphore, all sixteen/eighteen data lines output the semaphore value. The read value is latched in an output register to prevent the semaphore from changing state during a write from the other port. If both ports attempt to access the semaphore within t_{SPS} of each other, the semaphore is definitely obtained by one side or the other, but there is no guarantee which side controls the semaphore.

Maximum Ratings

Exceeding maximum ratings may shorten the useful life of the device. User guidelines are not tested.

Storage temperature ..... –65 °C to +150 °C

Ambient temperature with power applied ..... –55 °C to +125 °C

Supply voltage to ground potential .....–0.5 V to +4.6 V

DC voltage applied to outputs in High Z state .....–0.5 V to V_{CC} + 0.5 V

DC input voltage [8] .....–0.5 V to V_{CC} + 0.5 V

Output current into outputs (LOW) ..... 20 mA

Static discharge voltage ..... > 1100 V

Latch-up current ..... > 200 mA

Operating Range

Range	Ambient Temperature	V_{CC}
Commercial	0 °C to +70 °C	3.3 V ± 300 mV
Industrial [9]	–40 °C to +85 °C	3.3 V ± 300 mV

Electrical Characteristics

Over the Operating Range

Parameter	Description		CY7C027V/027AV/028V/CY7C037AV/CY7C038V									Unit
			-15			-20			-25			
			Min	Typ	Max	Min	Typ	Max	Min	Typ	Max	
V_{OH}	Output HIGH voltage (V_{CC} = Min., I_{OH} = –4.0 mA)		2.4	–		2.4	–	–	2.4	–	–	V
V_{OL}	Output LOW voltage (V_{CC} = Min., I_{OH} = +4.0 mA)		–		0.4	–		0.4	–		0.4	V
V_{IH}	Input HIGH voltage		2.2		–	2.2		–	2.2		–	V
V_{IL}	Input LOW voltage		–		0.8	–		0.8	–		0.8	V
I_{IX}	Input leakage current		–5		5	–5		5	–5		5	µA
I_{OZ}	Output leakage current		–10		10	–10		10	–10		10	µA
I_{CC}	Operating current (V_{CC} = Max., I_{OUT} = 0 mA) outputs disabled	Commercial	–	125	185	–	120	175	–	115	165	mA
		Industrial [9]		–			140	195		–		mA
I_{SB1}	Standby current (Both ports TTL level) $\overline{CE}_L$ & $\overline{CE}_R \geq V_{IH}$, f = f_{MAX}	Commercial		35	50		35	45		30	40	mA
		Industrial [9]		–			45	55		–		mA
I_{SB2}	Standby current (One port TTL level) $\overline{CE}_L$ | $\overline{CE}_R \geq V_{IH}$, f = f_{MAX}	Commercial		80	120		75	110		65	95	mA
		Industrial [9]		–			85	120		–		mA
I_{SB3}	Standby current (Both ports CMOS level) $\overline{CE}_L$ & $\overline{CE}_R \geq V_{CC}$ – 0.2 V, f = 0	Commercial		10	250		10	250		10	250	µA
		Industrial [9]		–			10	250		–		µA
I_{SB4}	Standby current (One port CMOS level) $\overline{CE}_L$ | $\overline{CE}_R \geq V_{IH}$, f = f_{MAX} [10]	Commercial		75	105		70	95		60	80	mA
		Industrial [9]		–			80	105		–		mA

Capacitance

Parameter [11]	Description	Test Conditions	Max	Unit
C_{IN}	Input capacitance	T_A = 25 °C, f = 1 MHz, V_{CC} = 3.3 V	10	pF
C_{OUT}	Output capacitance		10	pF

Notes
8. Pulse width < 20 ns.
9. Industrial parts are available in CY7C028V and CY7C038V, CY7C027V/027AV only.
10. f_{MAX} = $1/t_{RC}$ = All inputs cycling at f = $1/t_{RC}$ (except output enable). f = 0 means no address or control lines change. This applies only to inputs at CMOS level standby I_{SB3}.
11. Tested initially and after any design or process changes that may affect these parameters.

AC Test Loads and Waveforms

Figure 3. AC Test Loads and Waveforms

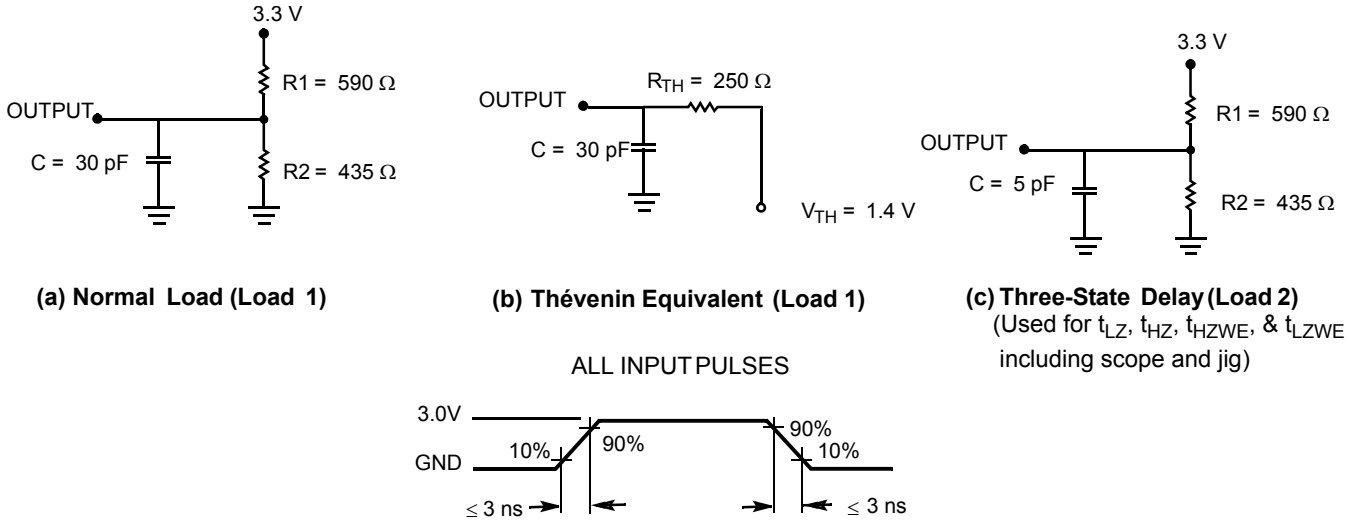

(a) Normal Load (Load 1)

(b) Thévenin Equivalent (Load 1)

(c) Three-State Delay (Load 2)
(Used for t_{LZ}, t_{HZ}, t_{HZWE}, & t_{LZWE} including scope and jig)

Data Retention Mode

The CY7C027V/027AV/028V and CY7037AV/038V are designed with battery backup in mind. Data retention voltage and supply current are guaranteed over temperature. The following rules ensure data retention:

1. Chip Enable ($\overline{CE}$) must be held HIGH during data retention, within V_{CC} to V_{CC} – 0.2 V
2. $\overline{CE}$ must be kept between V_{CC} – 0.2 V and 70% of V_{CC} during the power up and power down transitions
3. The RAM can begin operation >t_{RC} after V_{CC} reaches the minimum operating voltage (3.0 V)

Timing

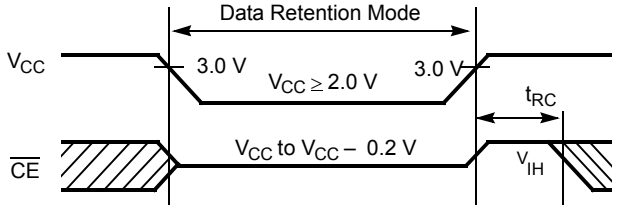

Parameter	Test Conditions [12]	Max	Unit
ICC_{DR1}	At VCC_{DR} = 2 V	50	µA

Note
12. $\overline{CE}$ = V_{CC}, V_{in} = GND to V_{CC}, T_A = 25° C. This parameter is guaranteed but not tested.

Switching Characteristics

Over the Operating Range

Parameter [13]	Description	CY7C027V/027AV/028V/ CY7C037AV/CY7C038V						Unit
		-15		-20		-25		
		Min	Max	Min	Max	Min	Max	
Read Cycle								
t_{RC}	Read cycle time	15	–	20	–	25	–	ns
t_{AA}	Address to data valid	–	15	–	20	–	25	ns
t_{OHA}	Output hold from address change	3	–	3	–	3	–	ns
t_{ACE} [14]	$\overline{CE}$ LOW to data valid	–	15	–	20	–	25	ns
t_{DOE}	$\overline{OE}$ LOW to data valid	–	10	–	12	–	13	ns
t_{LZOE} [15, 16, 17]	$\overline{OE}$ LOW to Low Z	3	–	3	–	3	–	ns
t_{HZOE} [15, 16, 17]	$\overline{OE}$ HIGH to High Z	–	10	–	12	–	15	ns
t_{LZCE} [15, 16, 17]	$\overline{CE}$ LOW to Low Z	3	–	3	–	3	–	ns
t_{HZCE} [15, 16, 17]	$\overline{CE}$ HIGH to High Z	–	10	–	12	–	15	ns
t_{PU} [17]	$\overline{CE}$ LOW to power-up	0	–	0	–	0	–	ns
t_{PD} [17]	$\overline{CE}$ HIGH to power-down	–	15	–	20	–	25	ns
t_{ABE} [14]	Byte enable access time	–	15	–	20	–	25	ns
Write Cycle								
t_{WC}	Write cycle time	15	–	20	–	25	–	ns
t_{SCE} [14]	$\overline{CE}$ LOW to write end	12	–	16	–	20	–	ns
t_{AW}	Address valid to write end	12	–	16	–	20	–	ns
t_{HA}	Address hold from write end	0	–	0	–	0	–	ns
t_{SA} [14]	Address setup to write start	0	–	0	–	0	–	ns
t_{PWE}	Write pulse width	12	–	17	–	22	–	ns
t_{SD}	Data setup to write end	10	–	12	–	15	–	ns
t_{HD}	Data hold from write end	0	–	0	–	0	–	ns
t_{HZWE} [16, 17]	R/$\overline{W}$ LOW to High Z	–	10	–	12	–	15	ns
t_{LZWE} [16, 17]	R/$\overline{W}$ HIGH to Low Z	3	–	3	–	3	–	ns
t_{WDD} [18]	Write pulse to data delay	–	30	–	40	–	50	ns
t_{DDD} [18]	Write data valid to read data valid	–	25	–	30	–	35	ns

Notes
13. Test conditions assume signal transition time of 3 ns or less, timing reference levels of 1.5 V, input pulse levels of 0 to 3.0 V, and output loading of the specified I_{OL}/I_{OH} and 30 pF load capacitance.
14. To access RAM, $\overline{CE}$=L, $\overline{UB}$=L, $\overline{SEM}$=H. To access semaphore, $\overline{CE}$=H and $\overline{SEM}$=L. Either condition must be valid for the entire t_{SCE} time.
15. At any given temperature and voltage condition for any given device, t_{HZCE} is less than t_{LZCE} and t_{HZOE} is less than t_{LZOE}.
16. Test conditions used are Load 2.
17. This parameter is guaranteed by design, but it is not production tested. For information on port-to-port delay through RAM cells from writing port to reading port, refer to Figure 11.
18. t_{BDD} is a calculated parameter and is the greater of $t_{WDD}–t_{PWE}$ (actual) or $t_{DDD}–t_{SD}$ (actual).

Switching Characteristics(continued)

Over the Operating Range

Parameter [13]	Description	CY7C027V/027AV/028V/ CY7C037AV/CY7C038V						Unit
		-15		-20		-25		
		Min	Max	Min	Max	Min	Max	
Busy Timing[19]								
t_{BLA}	$\overline{BUSY}$ LOW from address match	–	15	–	20	–	20	ns
t_{BHA}	$\overline{BUSY}$ HIGH from address mismatch	–	15	–	20	–	20	ns
t_{BLC}	$\overline{BUSY}$ LOW from $\overline{CE}$ LOW	–	15	–	20	–	20	ns
t_{BHC}	$\overline{BUSY}$ HIGH from $\overline{CE}$ HIGH	–	15	–	16	–	17	ns
t_{PS}	Port setup for priority	5	–	5	–	5	–	ns
t_{WB}	R/$\overline{W}$ HIGH after $\overline{BUSY}$ (Slave)	0	–	0	–	0	–	ns
t_{WH}	R/$\overline{W}$ HIGH after $\overline{BUSY}$ HIGH (Slave)	13	–	15	–	17	–	ns
t_{BDD}[20]	$\overline{BUSY}$ HIGH to data valid	–	15	–	20	–	25	ns
Interrupt Timing[19]								
t_{INS}	$\overline{INT}$ set time	–	15	–	20	–	20	ns
t_{INR}	$\overline{INT}$ reset time	–	15	–	20	–	20	ns
Semaphore Timing								
t_{SOP}	$\overline{SEM}$ flag update pulse ($\overline{OE}$ or $\overline{SEM}$)	10	–	10	–	12	–	ns
t_{SWRD}	SEM flag write to read time	5	–	5	–	5	–	ns
t_{SPS}	SEM flag contention window	5	–	5	–	5	–	ns
t_{SAA}	SEM address access time	–	15	–	20	–	25	ns

Notes
19. For information on port-to-port delay through RAM cells from writing port to reading port, refer to Figure 11 waveform.
20. t_{BDD} is a calculated parameter and is the greater of t_{WDD}–t_{PWE} (actual) or t_{DDD}–t_{SD} (actual).

Switching Waveforms

Figure 4. Read Cycle No. 1 (Either Port Address Access) [21, 22, 23]

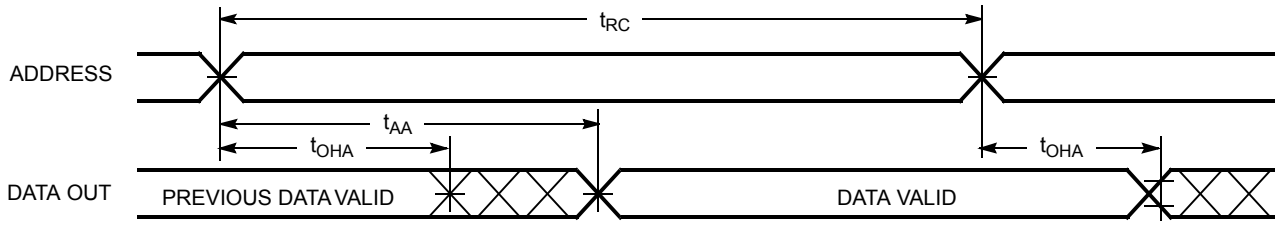

Figure 5. Read Cycle No. 2 (Either Port $\overline{CE}$/$\overline{OE}$ Access) [21, 24, 25]

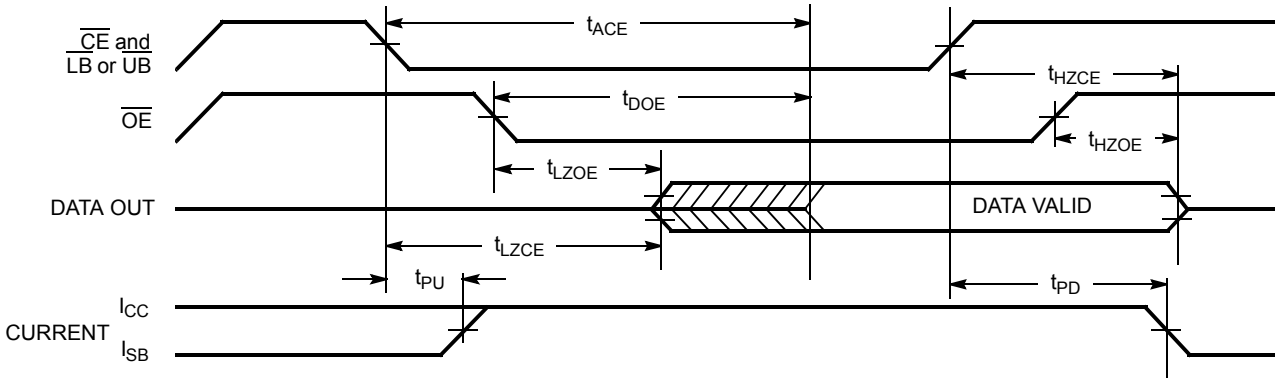

Figure 6. Read Cycle No. 3 (Either Port) [21, 23, 24, 25]

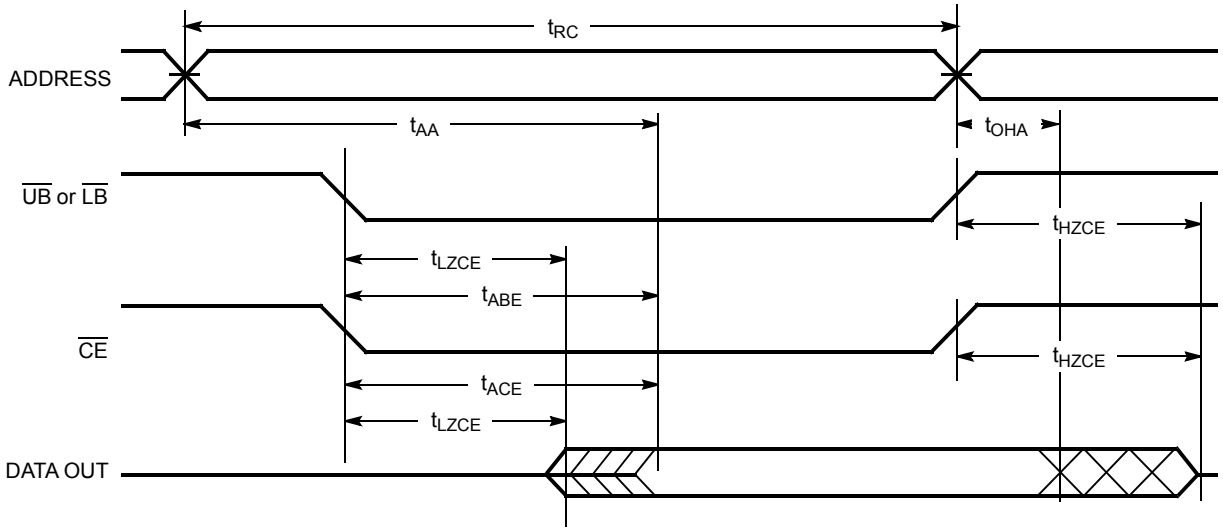

Notes
21. R/$\overline{W}$ is HIGH for read cycles.
22. Device is continuously selected $\overline{CE} = V_{IL}$ and $\overline{UB}$ or $\overline{LB} = V_{IL}$. This waveform cannot be used for semaphore reads.
23. $\overline{OE} = V_{IL}$.
24. Address valid prior to or coincident with $\overline{CE}$ transition LOW.
25. To access RAM, $\overline{CE} = V_{IL}$, $\overline{UB}$ or $\overline{LB} = V_{IL}$, $\overline{SEM} = V_{IH}$. To access semaphore, $\overline{CE} = V_{IH}$, $\overline{SEM} = V_{IL}$.

Switching Waveforms(continued)

Figure 7. Write Cycle No. 1: R/$\overline{W}$ Controlled Timing [26, 27, 28, 29]

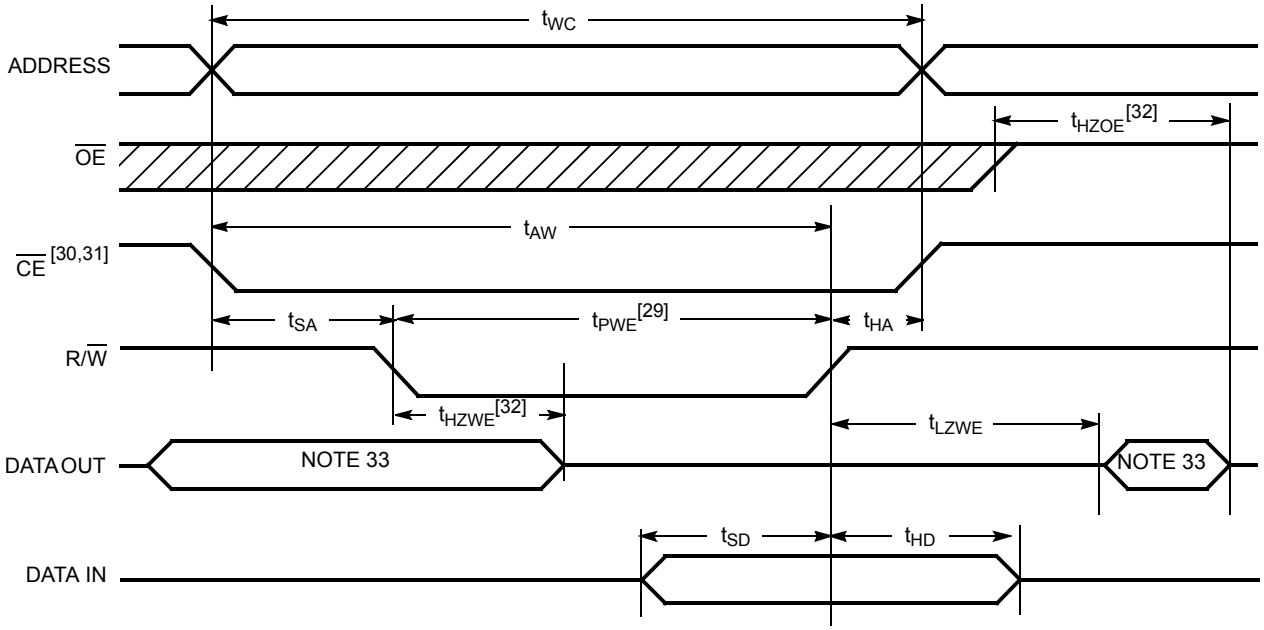

Figure 8. Write Cycle No. 2: $\overline{CE}$ Controlled Timing [26, 27, 28, 34]

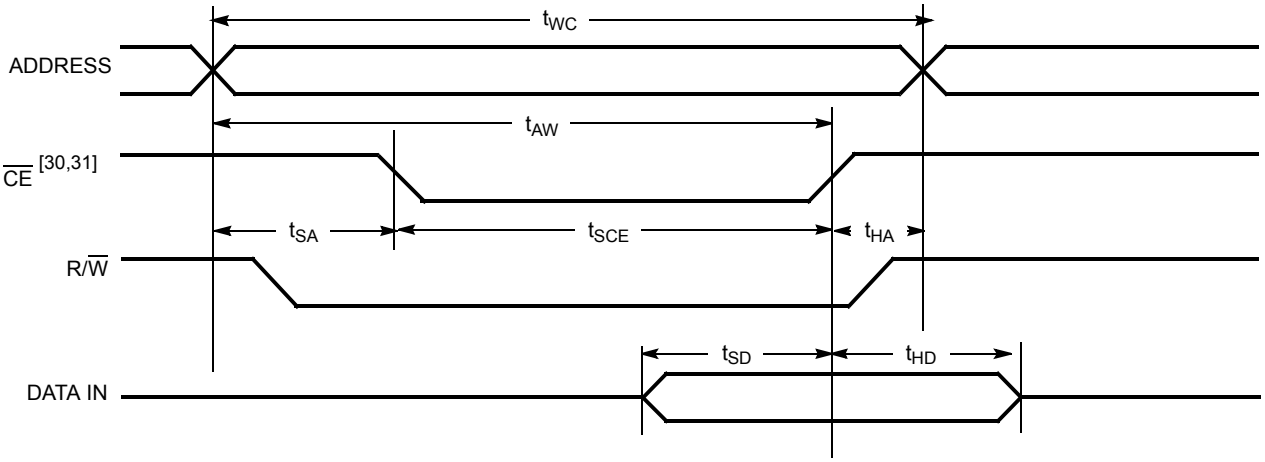

Notes
26. R/$\overline{W}$ must be HIGH during all address transitions.
27. A write occurs during the overlap (t_{SCE} or t_{PWE}) of a LOW $\overline{CE}$ or $\overline{SEM}$ and a LOW $\overline{UB}$ or $\overline{LB}$.
28. t_{HA} is measured from the earlier of $\overline{CE}$ or R/$\overline{W}$ or ($\overline{SEM}$ or R/$\overline{W}$) going HIGH at the end of write cycle.
29. If $\overline{OE}$ is LOW during a R/$\overline{W}$ controlled write cycle, the write pulse width must be the larger of t_{PWE} or (t_{HZWE} + t_{SD}) to allow the I/O drivers to turn off and data to be placed on the bus for the required t_{SD}. If $\overline{OE}$ is HIGH during an R/$\overline{W}$ controlled write cycle, this requirement does not apply and the write pulse can be as short as the specified t_{PWE}.
30. To access RAM, $\overline{CE}$ = V_{IL}, $\overline{SEM}$ = V_{IH}.
31. To access upper byte, $\overline{CE}$ = V_{IL}, $\overline{UB}$ = V_{IL}, $\overline{SEM}$ = V_{IH}.
To access lower byte, $\overline{CE}$ = V_{IL}, $\overline{LB}$ = V_{IL}, $\overline{SEM}$ = V_{IH}.
32. Transition is measured ±500 mV from steady state with a 5 pF load (including scope and jig). This parameter is sampled and not 100% tested.
33. During this period, the I/O pins are in the output state, and input signals must not be applied.
34. If the $\overline{CE}$ or $\overline{SEM}$ LOW transition occurs simultaneously with or after the R/$\overline{W}$ LOW transition, the outputs remain in the high impedance state.

Switching Waveforms(continued)

Figure 9. Semaphore Read After Write Timing, Either Side [35]

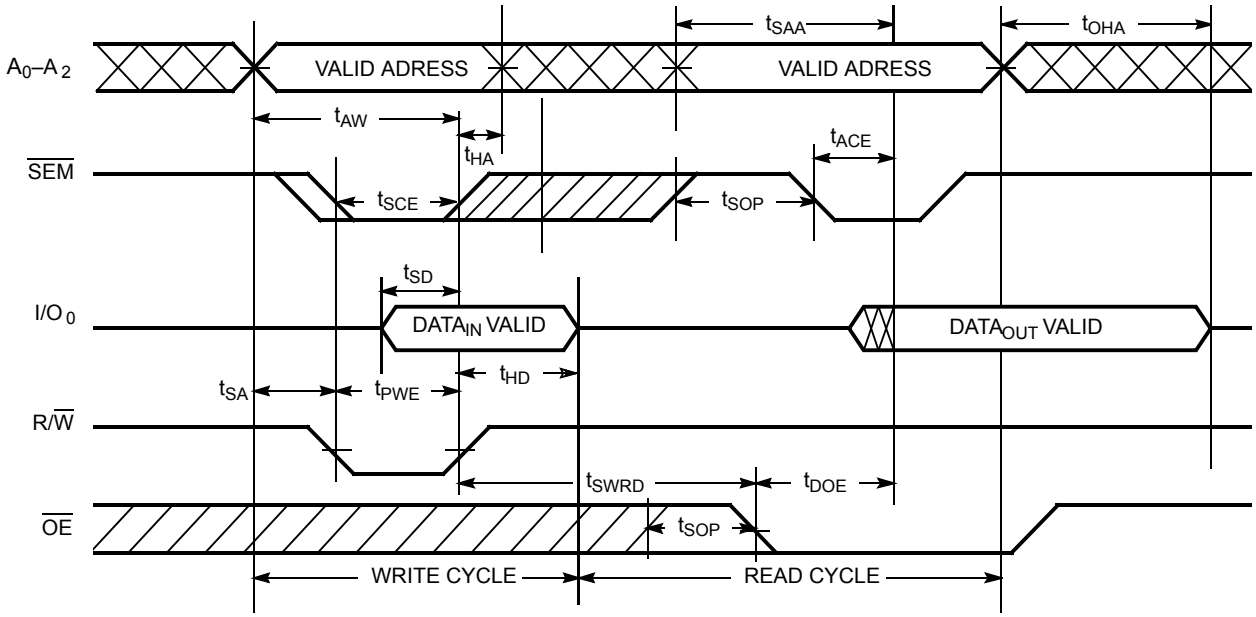

Figure 10. Timing Diagram of Semaphore Contention [36, 37, 38]

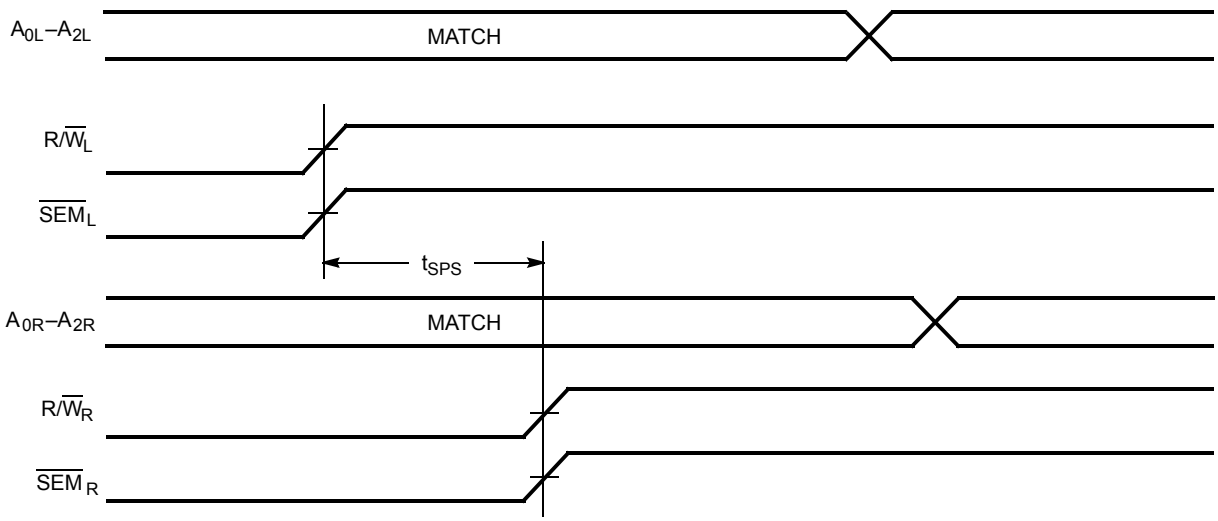

Notes
35. $\overline{CE}$ = HIGH for the duration of the above timing (both write and read cycle).
36. $I/O_{0R} = I/O_{0L}$ = LOW (request semaphore); $\overline{CE}_R = \overline{CE}_L$ = HIGH.
37. Semaphores are reset (available to both ports) at cycle start.
38. If t_{SPS} is violated, the semaphore is definitely obtained by one side or the other, but which side gets the semaphore is unpredictable.

Switching Waveforms(continued)

Figure 11. Timing Diagram of Read with $\overline{BUSY}$ (M/$\overline{S}$ = HIGH) [39]

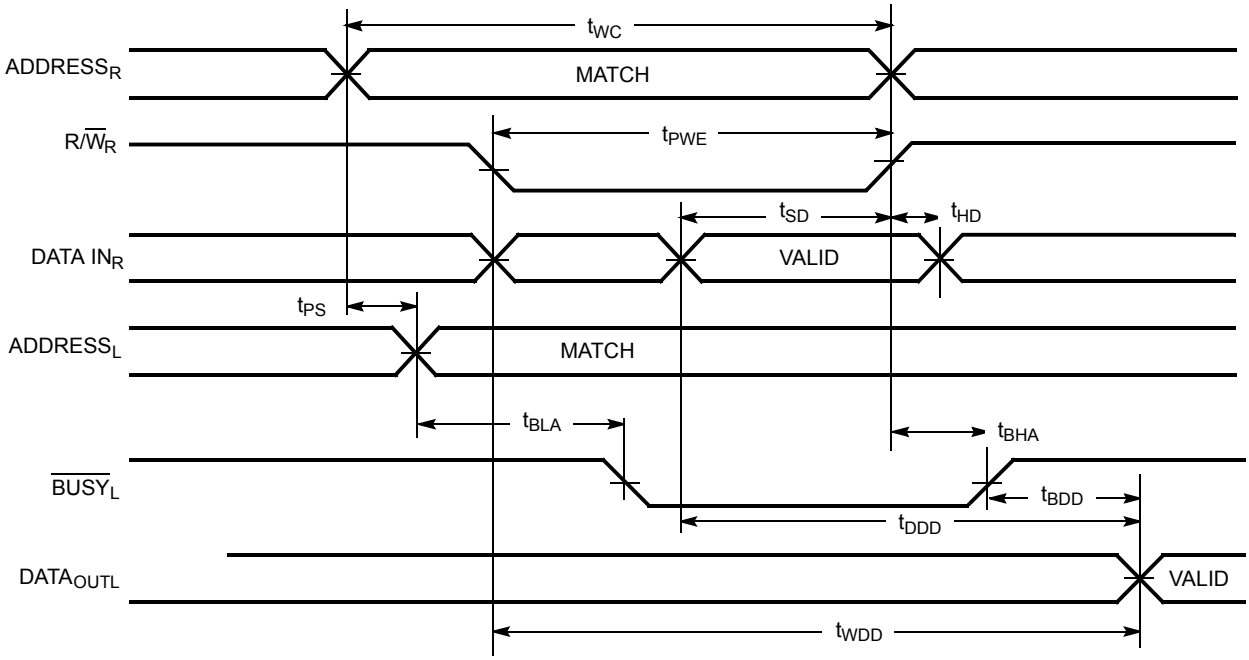

Figure 12. Write Timing with Busy Input (M/$\overline{S}$ = LOW)

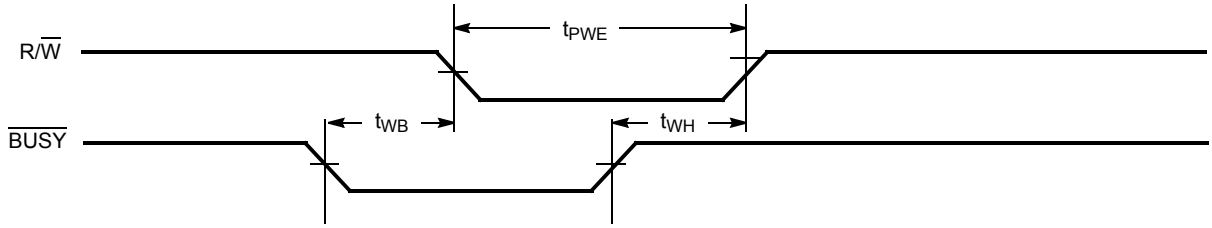

Note
39. $\overline{CE}_L$ = $\overline{CE}_R$ = LOW.

Switching Waveforms(continued)

Figure 13. Busy Timing Diagram No. 1 ($\overline{CE}$ Arbitration) [40]

$\overline{CE}_L$ Valid First:

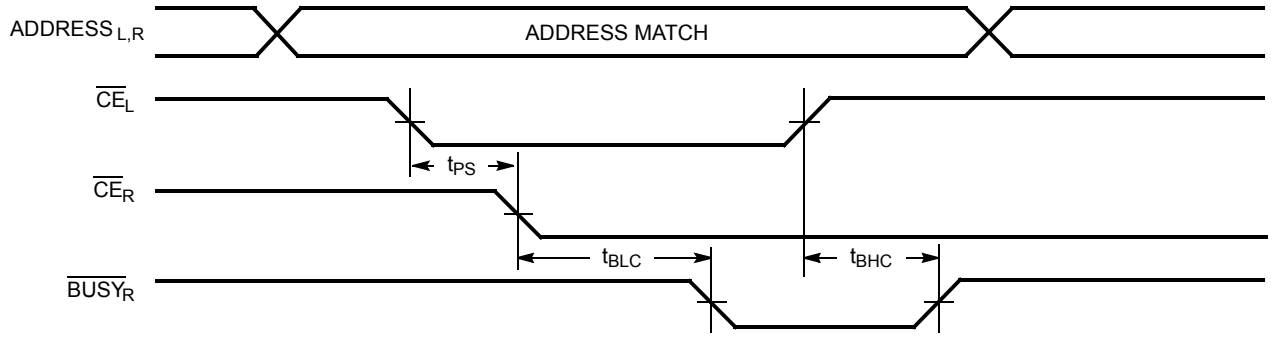

CE_R Valid First:

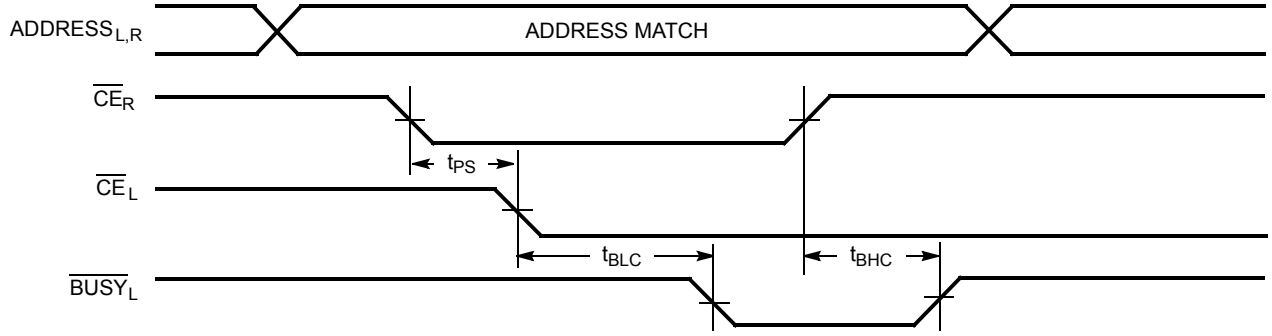

Figure 14. Busy Timing Diagram No. 2 (Address Arbitration) [40]

Left Address Valid First:

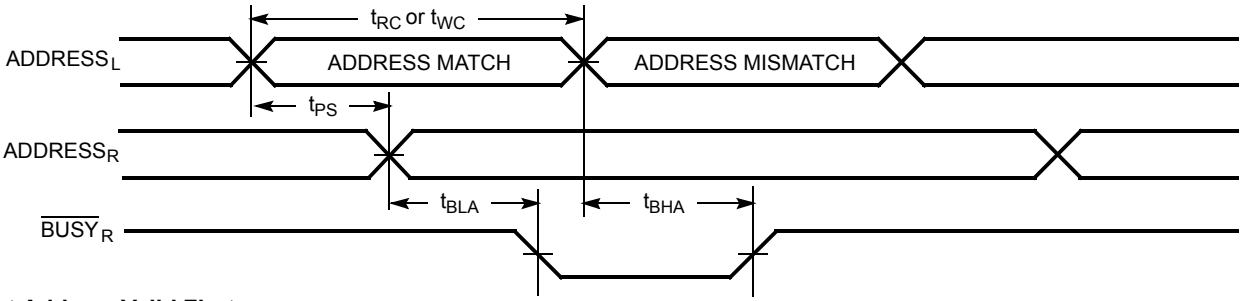

Right Address Valid First:

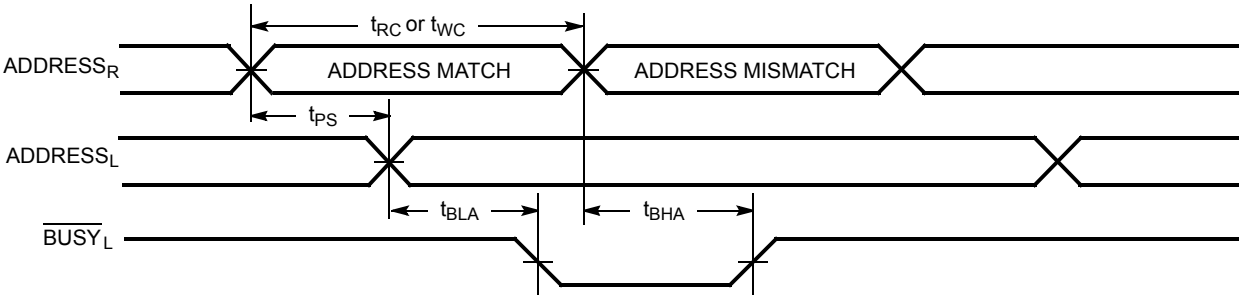

Note
40. If t_{PS} is violated, the busy signal is asserted on one side or the other, but there is no guarantee to which side $\overline{BUSY}$ is asserted.

Switching Waveforms(continued)

Figure 15. Interrupt Timing Diagrams

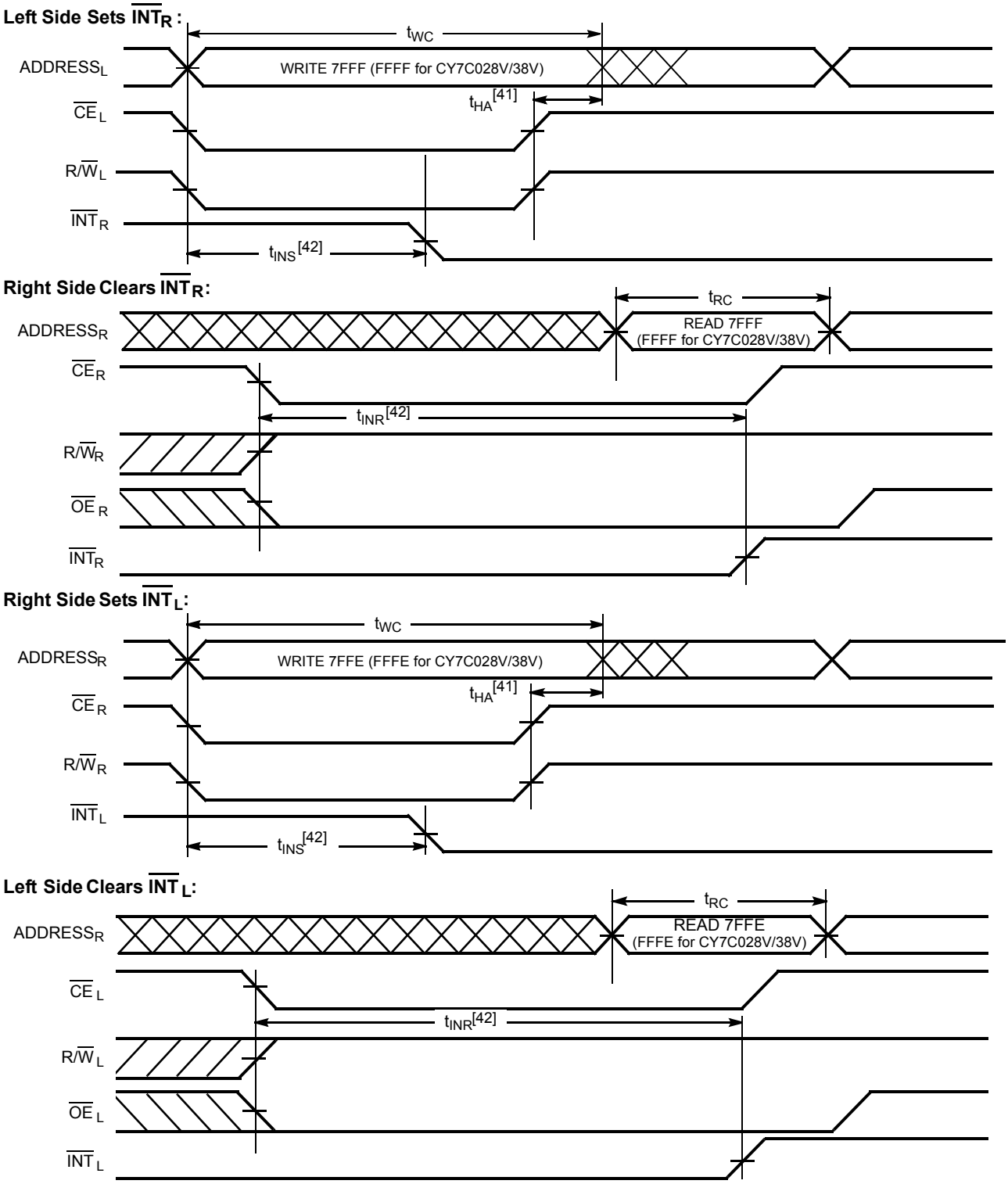

Notes
41. t_{HA} depends on which enable pin ($\overline{CE}_L$ or $R/\overline{W}_L$) is deasserted first.
42. t_{INS} or t_{INR} depends on which enable pin ($\overline{CE}_L$ or $R/\overline{W}_L$) is asserted last.

Non-Contending Read/Write

Inputs						Outputs		Operation
$\overline{CE}$	R/$\overline{W}$	$\overline{OE}$	$\overline{UB}$	$\overline{LB}$	$\overline{SEM}$	I/O_9–I/O_{17}	I/O_0–I/O_8	
H	X	X	X	X	H	High Z	High Z	Deselected: Power-down
X	X	X	H	H	H	High Z	High Z	Deselected: Power-down
L	L	X	L	H	H	Data in	High Z	Write to upper byte only
L	L	X	H	L	H	High Z	Data in	Write to lower byte only
L	L	X	L	L	H	Data in	Data in	Write to both bytes
L	H	L	L	H	H	Data out	High Z	Read upper byte only
L	H	L	H	L	H	High Z	Data out	Read lower byte only
L	H	L	L	L	H	Data out	Data out	Read both bytes
X	X	H	X	X	X	High Z	High Z	Outputs disabled
H	H	L	X	X	L	Data out	Data out	Read data in semaphore flag
X	H	L	H	H	L	Data out	Data out	Read data in semaphore flag
H	↓	X	X	X	L	Data in	Data in	Write D_{IN0} into semaphore flag
X	↓	X	H	H	L	Data in	Data in	Write D_{IN0} into semaphore flag
L	X	X	L	X	L			Not allowed
L	X	X	X	L	L			Not allowed

Interrupt Operation Example

(Assumes $\overline{BUSY}_L$ = $\overline{BUSY}_R$ = HIGH) [43]

	Left Port					Right Port				
Function	R/$\overline{W}_L$	$\overline{CE}_L$	$\overline{OE}_L$	$A_{0L–14L}$	$\overline{INT}_L$	R/$\overline{W}_R$	$\overline{CE}_R$	$\overline{OE}_R$	$A_{0R–14R}$	$\overline{INT}_R$
Set right $\overline{INT}_R$ flag	L	L	X	7FFF	X	X	X	X	X	L[44]
Reset right $\overline{INT}_R$ flag	X	X	X	X	X	X	L	L	7FFF	H[45]
Set left $\overline{INT}_L$ flag	X	X	X	X	L[45]	L	L	X	7FFE	X
Reset left $\overline{INT}_L$ flag	X	L	L	7FFE	H[44]	X	X	X	X	X

Notes
43. $A_{0L–15L}$ and $A_{0R–15R}$,FFFF/FFFE for the CY7C028V/038V.
44. If $\overline{BUSY}_L$ =L, then no change.
45. If $\overline{BUSY}_R$=L, then no change.

Semaphore Operation Example

Function	I/O_0–I/O_{17} Left	I/O_0–I/O_{17} Right	Status
No action	1	1	Semaphore free
Left port writes 0 to semaphore	0	1	Left port has semaphore token
Right port writes 0 to semaphore	0	1	No change. Right side has no write access to semaphore
Left port writes 1 to semaphore	1	0	Right port obtains semaphore token
Left port writes 0 to semaphore	1	0	No change. Left port has no write access to semaphore
Right port writes 1 to semaphore	0	1	Left port obtains semaphore token
Left port writes 1 to semaphore	1	1	Semaphore free
Right port writes 0 to semaphore	1	0	Right port has semaphore token
Right port writes 1 to semaphore	1	1	Semaphore free
Left port writes 0 to semaphore	0	1	Left port has semaphore token
Left port writes 1 to semaphore	1	1	Semaphore free

Ordering Information

32 K × 16 3.3 V Asynchronous Dual-Port SRAM

Speed (ns)	Ordering Code	Package Name	Package Type	Operating Range
15	CY7C027V-15AXC	A100	100-Pin Pb-free Thin Quad Flat Pack	Commercial
	CY7C027V-15AXI	A100	100-Pin Pb-free Thin Quad Flat Pack	Industrial
20	CY7C027V-20AC	A100	100-Pin Thin Quad Flat Pack	Commercial
	CY7C027V-20AXC	A100	100-Pin Pb-free Thin Quad Flat Pack	Commercial
25	CY7C027V-25AC	A100	100-Pin Thin Quad Flat Pack	Commercial
	CY7C027V-25AXC	A100	100-Pin Pb-free Thin Quad Flat Pack	Commercial
	CY7C027AV-25AXI	A100	100-Pin Pb-free Thin Quad Flat Pack	Industrial

64 K × 16 3.3 V Asynchronous Dual-Port SRAM

Speed (ns)	Ordering Code	Package Name	Package Type	Operating Range
15	CY7C028V-15AXC	A100	100-Pin Pb-free Thin Quad Flat Pack	Commercial
	CY7C028V-15AXI	A100	100-Pin Pb-free Thin Quad Flat Pack	Industrial
20	CY7C028V-20AXC	A100	100-Pin Pb-free Thin Quad Flat Pack	Commercial
	CY7C028V-20AI	A100	100-Pin Thin Quad Flat Pack	Industrial
	CY7C028V-20AXI	A100	100-Pin Pb-free Thin Quad Flat Pack	Industrial
25	CY7C028V-25AC	A100	100-Pin Thin Quad Flat Pack	Commercial
	CY7C028V-25AXC	A100	100-Pin Pb-free Thin Quad Flat Pack	Commercial

32 K × 18 3.3 V Asynchronous Dual-Port SRAM

Speed (ns)	Ordering Code	Package Name	Package Type	Operating Range
20	CY7C037AV-20AXC	A100	100-Pin Pb-free Thin Quad Flat Pack	Commercial
	CY7C037AV-20AXI	A100	100-Pin Pb-free Thin Quad Flat Pack	Industrial

64 K × 18 3.3 V Asynchronous Dual-Port SRAM

Speed (ns)	Ordering Code	Package Name	Package Type	Operating Range
20	CY7C038V-20AXI	A100	100-Pin Pb-free Thin Quad Flat Pack	Industrial

Ordering Code Definitions

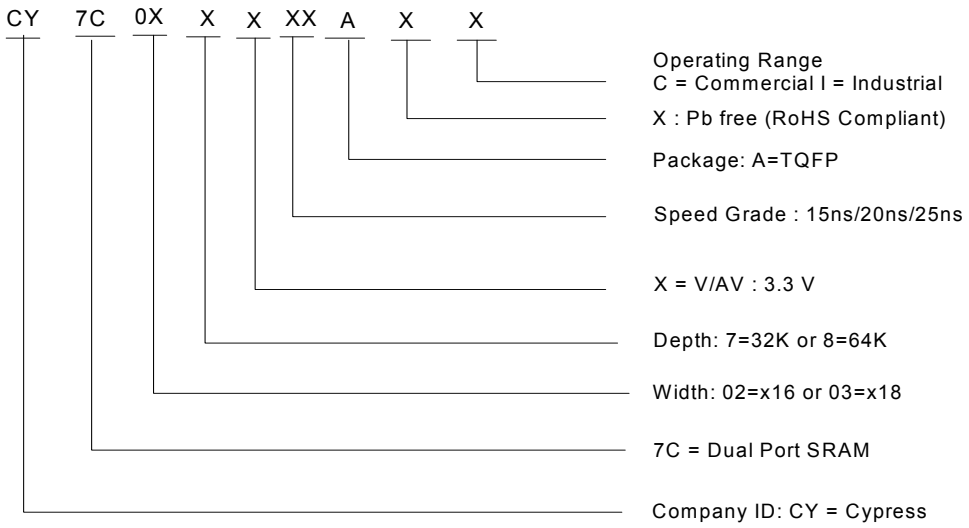

Package Diagram

Figure 16. 100-Pin Pb-Free Thin Plastic Quad Flat Pack (TQFP) A100

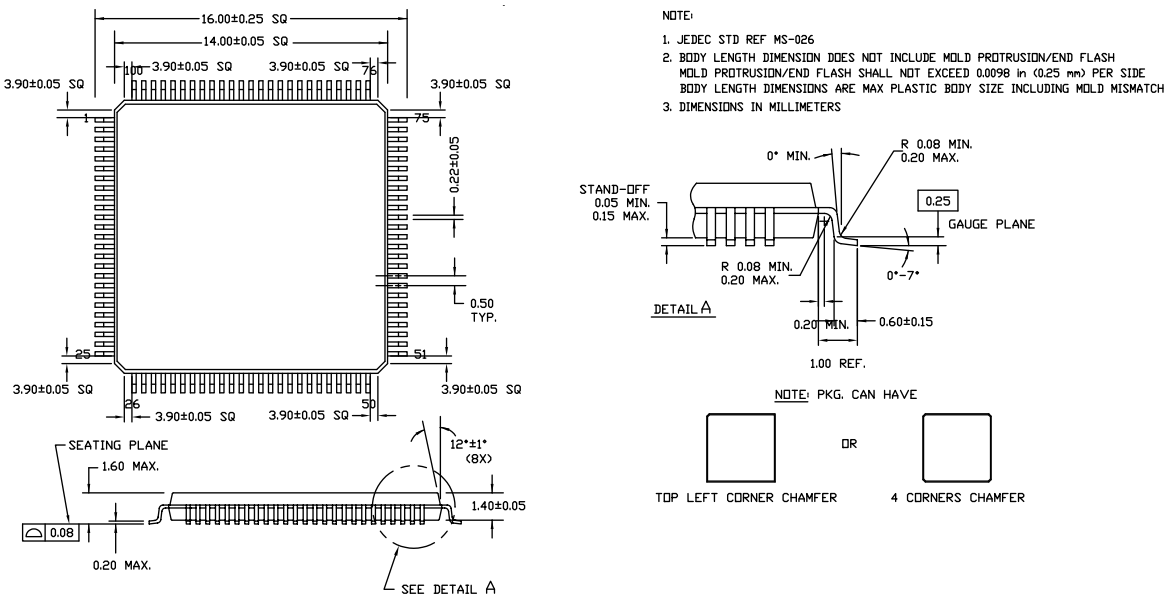

51-85048 *G

Acronyms

Acronym	Description
CMOS	complementary metal oxide semiconductor
I/O	input/output
SRAM	static random access memory
TQFP	thin quad plastic flatpack

Document Conventions

Units of Measure

Symbol	Unit of Measure
°C	degree Celsius
MHz	mega hertz
µA	microamperes
mA	milliamperes
mV	millivolts
ns	nanoseconds
Ω	ohms
pF	picofarad
V	volts
W	watts

Document History Page

Document Title: CY7C027V/027AV/028V/CY7C037AV/038V, 3.3 V 32 K / 64 K × 16 / 18 Dual-Port Static RAM Document Number: 38-06078				
Rev.	**ECN No.**	**Orig. of Change**	**Submission Date**	**Description of Change**
**	237626	YDT	6/30/04	Converted data sheet from old spec 38-00670 to conform with new data sheet. Removed cross information from features section
*A	259110	JHX	See ECN	Added Pb-Free packaging information.
*B	2623540	VKN / PYRS	12/17/08	Added CY7C027VN, CY7C027AV and CY7C037AV parts Updated Ordering information table
*C	2897217	RAME	03/22/2010	Updated Ordering Information Updated Package Diagram
*D	3093542	ADMU	11/25/2010	Removed information on CY7C027VN and CY7C037V Updated as per new template Added Acronyms and Units of Measure table Added Ordering Code Definitions Updated all footnotes
*E	3403652	ADMU	10/14/2011	removed pruned parts CY7C027V-25AI, CY7C038V-20AI from Ordering Information Updated Package Diagram.
*F	3845411	ADMU	01/29/2013	Updated Ordering Information (Updated part numbers). Updated Package Diagram: spec 51-85048 – Changed revision from *E to *G.
*G	3896090	ADMU	02/05/2013	Updated Ordering Information (Updated part numbers).

Sales, Solutions, and Legal Information

Worldwide Sales and Design Support

Cypress maintains a worldwide network of offices, solution centers, manufacturer's representatives, and distributors. To find the office closest to you, visit us at Cypress Locations.

Products

Automotive	cypress.com/go/automotive
Clocks & Buffers	cypress.com/go/clocks
Interface	cypress.com/go/interface
Lighting & Power Control	cypress.com/go/powerpsoc cypress.com/go/plc
Memory	cypress.com/go/memory
Optical & Image Sensing	cypress.com/go/image
PSoC	cypress.com/go/psoc
Touch Sensing	cypress.com/go/touch
USB Controllers	cypress.com/go/USB
Wireless/RF	cypress.com/go/wireless

PSoC Solutions

psoc.cypress.com/solutions

PSoC 1 | PSoC 3 | PSoC 5

© Cypress Semiconductor Corporation, 2009-2013. The information contained herein is subject to change without notice. Cypress Semiconductor Corporation assumes no responsibility for the use of any circuitry other than circuitry embodied in a Cypress product. Nor does it convey or imply any license under patent or other rights. Cypress products are not warranted nor intended to be used for medical, life support, life saving, critical control or safety applications, unless pursuant to an express written agreement with Cypress. Furthermore, Cypress does not authorize its products for use as critical components in life-support systems where a malfunction or failure may reasonably be expected to result in significant injury to the user. The inclusion of Cypress products in life-support systems application implies that the manufacturer assumes all risk of such use and in doing so indemnifies Cypress against all charges.

Any Source Code (software and/or firmware) is owned by Cypress Semiconductor Corporation (Cypress) and is protected by and subject to worldwide patent protection (United States and foreign), United States copyright laws and international treaty provisions. Cypress hereby grants to licensee a personal, non-exclusive, non-transferable license to copy, use, modify, create derivative works of, and compile the Cypress Source Code and derivative works for the sole purpose of creating custom software and or firmware in support of licensee product to be used only in conjunction with a Cypress integrated circuit as specified in the applicable agreement. Any reproduction, modification, translation, compilation, or representation of this Source Code except as specified above is prohibited without the express written permission of Cypress.

Disclaimer: CYPRESS MAKES NO WARRANTY OF ANY KIND, EXPRESS OR IMPLIED, WITH REGARD TO THIS MATERIAL, INCLUDING, BUT NOT LIMITED TO, THE IMPLIED WARRANTIES OF MERCHANTABILITY AND FITNESS FOR A PARTICULAR PURPOSE. Cypress reserves the right to make changes without further notice to the materials described herein. Cypress does not assume any liability arising out of the application or use of any product or circuit described herein. Cypress does not authorize its products for use as critical components in life-support systems where a malfunction or failure may reasonably be expected to result in significant injury to the user. The inclusion of Cypress' product in a life-support systems application implies that the manufacturer assumes all risk of such use and in doing so indemnifies Cypress against all charges.

Use may be limited by and subject to the applicable Cypress software license agreement.

All products and company names mentioned in this document may be the trademarks of their respective holders.