Data sheet acquired from Cypress Semiconductor Corporation.
Data sheet modified to remove devices not offered.

CY74FCT163244
CY74FCT163H244

16-Bit Buffers/Line Drivers

SCCS046 - December 1996 - Revised March 2000

Features

- **Low power, pin-compatible replacement for LCX and LPT families**
- **5V tolerant inputs and outputs**
- **24 mA balanced drive outputs**
- **Power-off disable outputs permits live insertion**
- **Edge-rate control circuitry for reduced noise**
- **FCT-C speed at 4.1 ns**
- **Latch-up performance exceeds JEDEC standard no. 17**
- **Typical output skew < 250 ps**
- **Industrial temperature range of –40˚C to +85˚C**
- **TSSOP (19.6-mil pitch) or SSOP (25-mil pitch)**
- **Typical V_{olp} (ground bounce) performance exceeds Mil Std 883D**
- **V_{CC} = 2.7V to 3.6V**
- **ESD (HBM) > 2000V**

CY74FCT163H244

- **Bus hold on data inputs**
- **Eliminates the need for external pull-up or pull-down resistors**
- **Devices with bus hold are not recommended for translating rail-to-rail CMOS signals to 3.3V logic levels**

Functional Description

These 16-bit buffers/line drivers are designed for use in memory driver, clock driver, or other bus interface applications, where high-speed and low power are required. The three-state controls are designed to allow 4-bit, 8-bit or combined 16-bit operation. Flow-through pinout and small shrink packaging simplifies board layout.

The CY74FCT163244 has 24-mA balanced output drivers with current limiting resistors in the outputs.

The CY74FCT163H244 has “bus hold” on the data inputs, which retains the last state of the input whenever the source driving the input goes to high impedance. This eliminates the need for pull-up/down resistors and prevents floating inputs.

Logic Block Diagrams CY74FCT163244, CY74FCT163H244

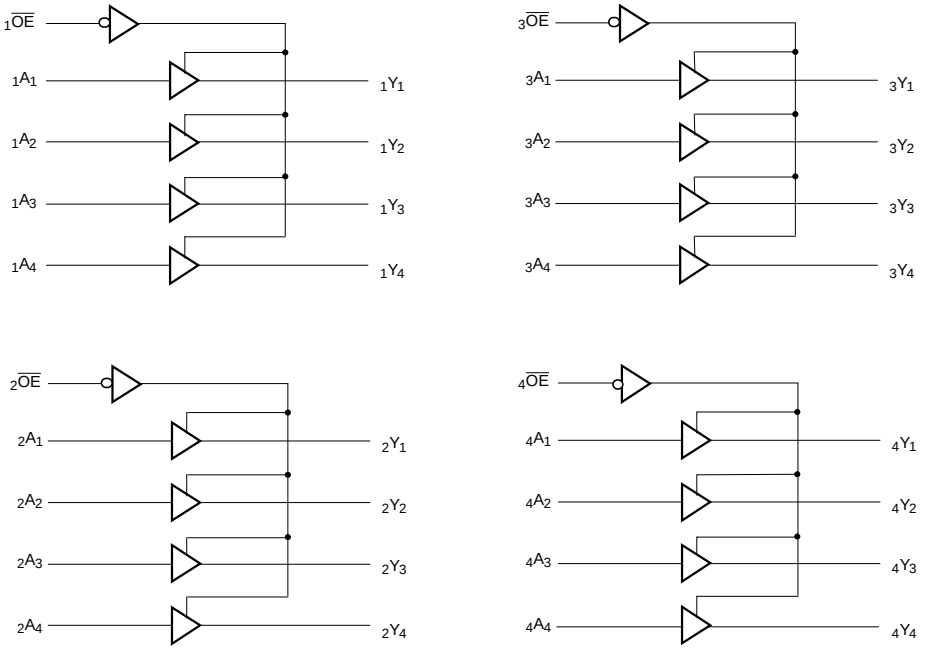

Pin Configuration

SSOP/TSSOP
Top View

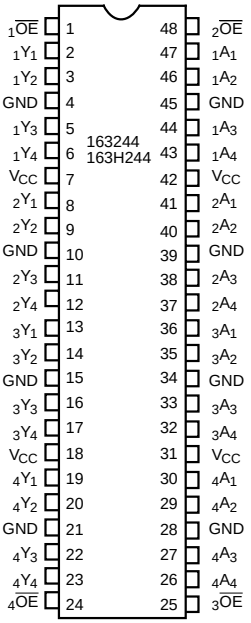

Copyright © 2000, Texas Instruments Incorporated

Pin Description

Name	Description
$\overline{OE}$	Three-State Output Enable Inputs (Active LOW)
A	Data Inputs[1]
Y	Three-State Outputs

Function Table[2]

Inputs		Outputs
$\overline{OE}$	A	Y
L	L	L
L	H	H
H	X	Z

Maximum Ratings[3,4]

(Above which the useful life may be impaired. For user guidelines, not tested.)

Storage Temperature ..... –55°C to +125°C

Ambient Temperature with Power Applied..... –55°C to +125°C

Supply Voltage Range ..... 0.5V to +4.6V

DC Input Voltage ..... –0.5V to +7.0V

DC Output Voltage..... –0.5V to +7.0V

DC Output Current (Maximum Sink Current/Pin) .....–60 to +120 mA

Power Dissipation 1.0W

Operating Range

Range	Ambient Temperature	V_{CC}
Industrial	–40°C to +85°C	2.7V to 3.6V

Electrical Characteristics for Non Bus Hold Devices Over the Operating Range V_{CC}=2.7V to 3.6V

Parameter	Description	Test Conditions		Min.	Typ.[5]	Max.	Unit
V_{IH}	Input HIGH Voltage	All Inputs		2.0		5.5	V
V_{IL}	Input LOW Voltage					0.8	V
V_H	Input Hysteresis[6]				100		mV
V_{IK}	Input Clamp Diode Voltage	V_{CC}=Min., I_{IN}=–18 mA			–0.7	– 1.2	V
I_{IH}	Input HIGH Current	V_{CC}=Max., V_I=5.5				±1	µA
I_{IL}	Input LOW Current	V_{CC}=Max., V_I=GND				±1	µA
I_{OZH}	High Impedance Output Current (Three-State Output pins)	V_{CC}=Max., V_{OUT}=5.5V				±1	µA
I_{OZL}	High Impedance Output Current (Three-State Output pins)	V_{CC}=Max., V_{OUT}=GND				±1	µA
I_{OS}	Short Circuit Current[7]	V_{CC}=Max., V_{OUT}=GND		–60	–135	–240	mA
I_{OFF}	Power-Off Disable	V_{CC}=0V, V_{OUT}≤4.5V				±100	µA
I_{CC}	Quiescent Power Supply Current	V_{IN}≤0.2V, V_{IN}≥V_{CC}–0.2V	V_{CC}=Max.		0.1	10	µA
ΔI_{CC}	Quiescent Power Supply Current (TTL inputs HIGH)	V_{IN}=V_{CC}–0.6V[8]	V_{CC}=Max.		2.0	30	µA

Notes:

1. On the CY74FCT163H244, these pins have “bus hold.”
2. H = HIGH Voltage Level. L = LOW Voltage Level. X = Don’t Care. Z = High Impedance.
3. Operation beyond the limits set forth may impair the useful life of the device. Unless otherwise noted, these limits are over the operating free-air temperature range.
4. With the exception of inputs with bus hold, unused inputs must always be connected to an appropriate logic voltage level, preferably either V_{CC} or ground.
5. Typical values are at V_{CC}=3.3V, T_A = +25˚C ambient.
6. This parameter is specified but not tested.
7. Not more than one output should be shorted at a time. Duration of short should not exceed one second. The use of high-speed test apparatus and/or sample and hold techniques are preferable in order to minimize internal chip heating and more accurately reflect operational values. Otherwise prolonged shorting of a high output may raise the chip temperature well above normal and thereby cause invalid readings in other parametric tests. In any sequence of parameter tests, I_{OS} tests should be performed last.
8. Per TTL driven input; all other inputs at V_{CC} or GND.

Electrical Characteristics For Bus Hold Devices Over the Operating Range V_{CC}=2.7V to 3.6V

Parameter	Description	Test Conditions		Min.	Typ.[5]	Max.	Unit
V_{IH}	Input HIGH Voltage	All Inputs		2.0		V_{CC}	V
V_{IL}	Input LOW Voltage					0.8	V
V_H	Input Hysteresis[6]				100		mV
V_{IK}	Input Clamp Diode Voltage	V_{CC}=Min., I_{IN}=–18 mA			–0.7	–1.2	V
I_{IH}	Input HIGH Current	V_{CC}=Max., V_I=V_{CC}				±100	µA
I_{IL}	Input LOW Current					±100	µA
I_{BBH} I_{BBL}	Bus Hold Sustain Current on Bus Hold Input[9]	V_{CC}=Min.	V_I=2.0V	–50			µA
			V_I=0.8V	+50			µA
I_{BHHO} I_{BHLO}	Bus Hold Overdrive Current on Bus Hold Input[9]	V_{CC}=Max., V_I=1.5V				±500	µA
I_{OZH}	High Impedance Output Current (Three-State Output pins)	V_{CC}=Max., V_{OUT}=V_{CC}				±1	µA
I_{OZL}	High Impedance Output Current (Three-State Output pins)	V_{CC}=Max., V_{OUT}=GND				±1	µA
I_{OS}	Short Circuit Current[7]	V_{CC}=Max., V_{OUT}=GND		–60	–135	–240	mA
I_{OFF}	Power-Off Disable	V_{CC}=0V, V_{OUT}≤4.5V				±100	µA
I_{CC}	Quiescent Power Supply Current	V_{IN}≤0.2V, V_{IN}≥V_{CC}–0.2V	V_{CC}=Max.			+40	µA
Δ_{ICC}	Quiescent Power supply Current (TTL inputs HIGH)	V_{IN}=V_{CC}–0.6V[8]	V_{CC}=Max.			+350	µA

Electrical Characteristics For Balanced Drive Devices Over the Operating Range V_{CC}=2.7V to 3.6V

Parameter	Description	Test Conditions	Min.	Typ.[5]	Max.	Unit
I_{ODL}	Output LOW Dynamic Current[7]	V_{CC}=3.3V, V_{IN}=V_{IH} or V_{IL}, V_{OUT}=1.5V	45		180	mA
I_{ODH}	Output HIGH Dynamic Current[7]	V_{CC}=3.3V, V_{IN}=V_{IH} or V_{IL}, V_{OUT}=1.5V	–45		–180	mA
V_{OH}	Output HIGH Voltage	V_{CC}=Min., I_{OH}= –0.1 mA	V_{CC}–0.2			V
		V_{CC}=3.0V, I_{OH}= –8 mA	2.4[10]	3.0		V
		V_{CC}=3.0V, I_{OH}= –24 mA	2.0	3.0		V
V_{OL}	Output LOW Voltage	V_{CC}=Min., I_{OL}= 0.1mA			0.2	V
		V_{CC}=Min., I_{OL}= 24 mA		0.3	0.55	

Notes:

9. Pins with bus hold are described in Pin Description.
10. V_{OH} = V_{CC} – 0.6V at rated current.

Capacitance[6] (T_A = +25°C, f = 1.0 MHz)

Parameter	Description	Test Conditions	Typ.[5]	Max.	Unit
C_{IN}	Input Capacitance	V_{IN} = 0V	4.5	6.0	pF
C_{OUT}	Output Capacitance	V_{OUT} = 0V	5.5	8.0	pF

Power Supply Characteristics

Parameter	Description	Test Conditions		Typ.[5]	Max.	Unit
I_{CCD}	Dynamic Power Supply Current[10]	V_{CC}=Max., One Input Toggling, 50% Duty Cycle, Outputs Open, $\overline{OE}$=GND	$V_{IN}=V_{CC}$ or V_{IN}=GND	50	75	µA/MHz
I_C	Total Power Supply Current[11]	V_{CC}=Max., f_1=10 MHz, 50% Duty Cycle, Outputs Open, One Bit Toggling, $\overline{OE}$=GND	$V_{IN}=V_{CC}$ or V_{IN}=GND	0.5	0.8	mA
			$V_{IN}=V_{CC}$–0.6V or V_{IN}=GND	0.5	0.8	mA
		V_{CC}=Max., f_1=2.5 MHz, 50% Duty Cycle, Outputs Open, Sixteen Bits Toggling, $\overline{OE}$=GND	$V_{IN}=V_{CC}$ or V_{IN}=GND	2.0	3.0[12]	mA
			$V_{IN}=V_{CC}$–0.6V or V_{IN}=GND	2.0	3.3[12]	mA

Notes:

11. This parameter is not directly testable, but is derived for use in Total Power Supply calculations.
12. $I_C = I_{QUIESCENT} + I_{INPUTS} + I_{DYNAMIC}$
    $I_C = I_{CC}+\Delta I_{CC}D_HN_T+I_{CCD}(f_0/2 + f_1N_1)$
    I_{CC} = Quiescent Current with CMOS input levels
    ΔI_{CC} = Power Supply Current for a TTL HIGH input (V_{IN}=3.4V)
    D_H = Duty Cycle for TTL inputs HIGH
    N_T = Number of TTL inputs at D_H
    I_{CCD} = Dynamic Current caused by an input transition pair (HLH or LHL)
    f_0 = Clock frequency for registered devices, otherwise zero
    f_1 = Input signal frequency
    N_1 = Number of inputs changing at f_1
    All currents are in milliamps and all frequencies are in megahertz.
13. Values for these conditions are examples of the I_{CC} formula. These limits are specified but not tested.

Switching Characteristics Over the Operating Range V_{CC}=3.0V to 3.6V[14,15]

Parameter	Description	CY74FCT163244A CY74FCT163H244A		CY74FCT163244C CY74FCT163H244C		Unit	Fig. No.[16]
		Min.	Max.	Min.	Max.		
t_{PLH} t_{PHL}	Propagation Delay Data to Output	1.5	4.8	1.5	4.1	ns	1, 3
t_{PZH} t_{PZL}	Output Enable Time	1.5	6.2	1.5	5.8	ns	1, 7, 8
t_{PHZ} t_{PLZ}	Output Disable Time	1.5	5.6	1.5	5.2	ns	1, 7, 8
$t_{SK(O)}$	Output Skew[17]		0.5		0.5	ns	—

Notes:

14. Minimum limits are specified but not tested on Propagation Delays.
15. For V_{CC} =2.7, propagation delay, output enable and output disable times should be degraded by 20%.
16. See “Parameter Measurement Information” in the General Information section.
17. Skew between any two outputs of the same package switching in the same direction. This parameter is ensured by design.

Ordering Information CY74FCT163244

Speed (ns)	Ordering Code	Package Name	Package Type	Operating Range
4.1	CY74FCT163244CPACT	Z48	48-Lead (240-Mil) TSSOP	Industrial
	CY74FCT163244CPVC/PVCT	O48	48-Lead (300-Mil) SSOP	
4.8	CY74FCT163244APACT	Z48	48-Lead (240-Mil) TSSOP	Industrial
	CY74FCT163244APVC/PVCT	O48	48-Lead (300-Mil) SSOP	

Ordering Information CY74FCT163H244

Speed (ns)	Ordering Code	Package Name	Package Type	Operating Range
4.1	74FCT163H244CPACT	Z48	48-Lead (240-Mil) TSSOP	Industrial
	CY74FCT163H244CPVC	O48	48-Lead (300-Mil) SSOP	
	74FCT163H244CPVCT	O48	48-Lead (300-Mil) SSOP	

Package Diagrams

48-Lead Shrunk Small Outline Package O48

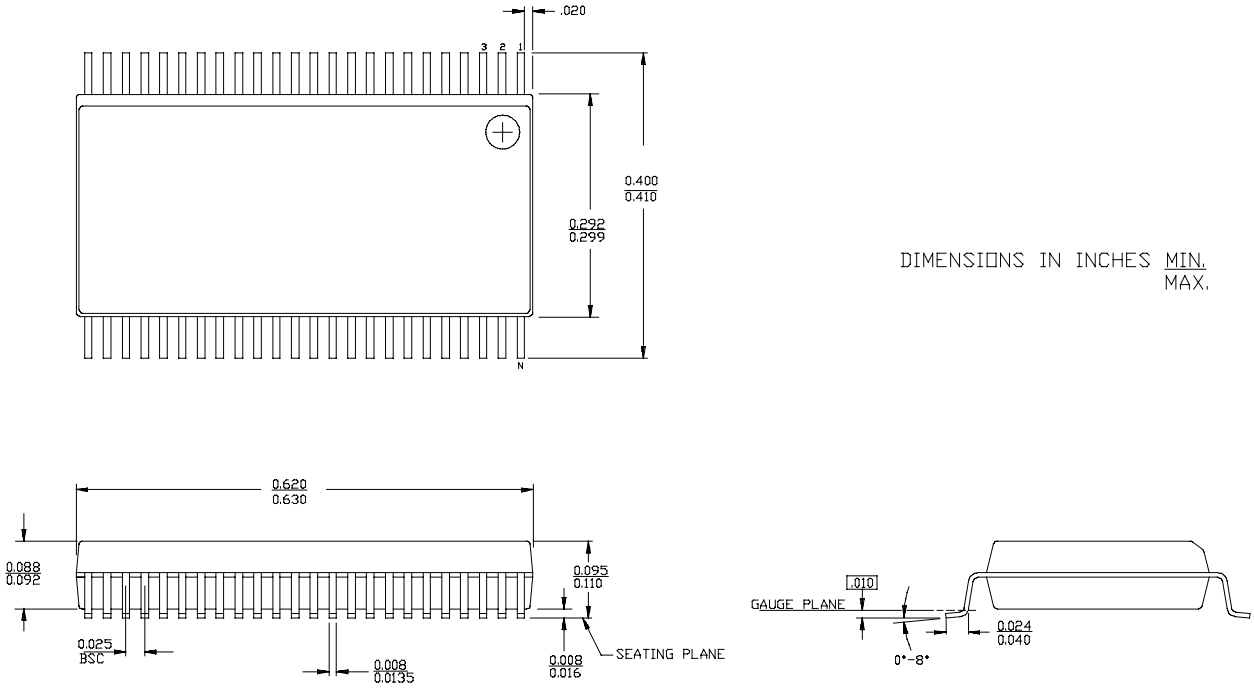

48-Lead Thin Shrunk Small Outline Package Z48

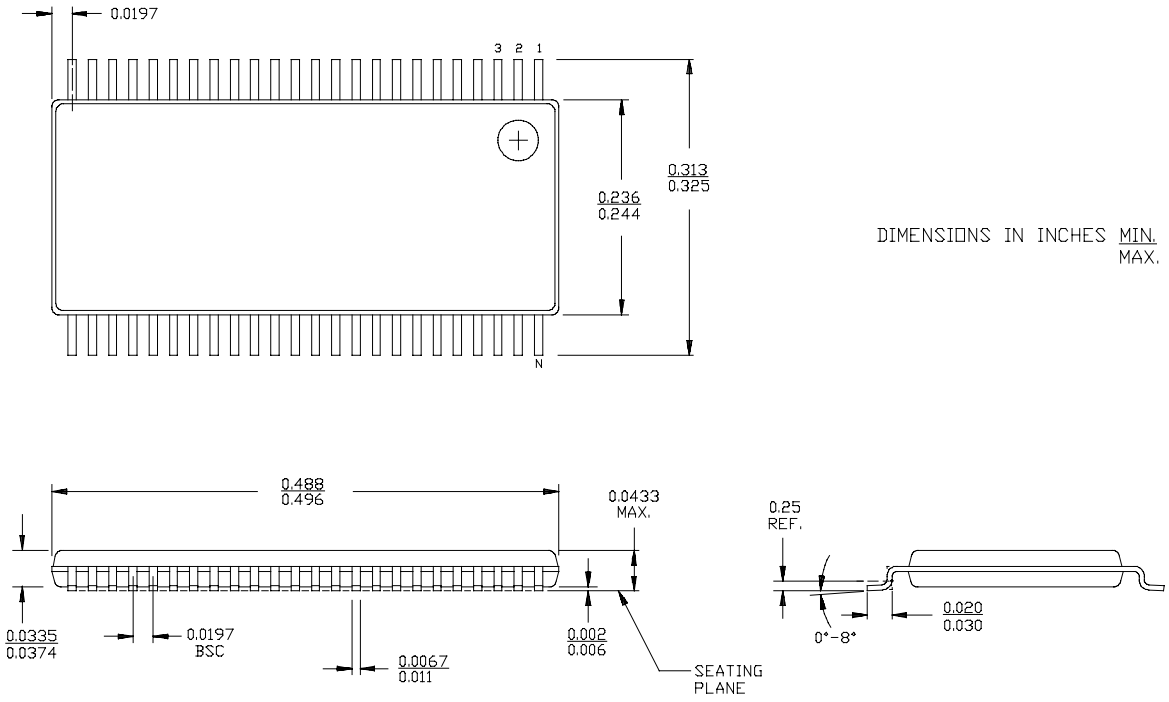

PACKAGING INFORMATION

Orderable Device	Status (1)	Package Type	Package Drawing	Pins	Package Qty	Eco Plan (2)	Lead/Ball Finish	MSL Peak Temp (3)
74FCT163H244CPACT	OBSOLETE	TSSOP	DGG	48		TBD	Call TI	Call TI
74FCT163H244CPVCT	OBSOLETE	SSOP	DL	48		TBD	Call TI	Call TI
CY74FCT163244APAC	OBSOLETE	TSSOP	DGG	48		TBD	Call TI	Call TI
CY74FCT163244APACT	OBSOLETE	TSSOP	DGG	48		TBD	Call TI	Call TI
CY74FCT163244APVC	OBSOLETE	SSOP	DL	48		TBD	Call TI	Call TI
CY74FCT163244APVCT	OBSOLETE	SSOP	DL	48		TBD	Call TI	Call TI
CY74FCT163244CPAC	OBSOLETE	TSSOP	DGG	48		TBD	Call TI	Call TI
CY74FCT163244CPACT	OBSOLETE	TSSOP	DGG	48		TBD	Call TI	Call TI
CY74FCT163244CPVC	OBSOLETE	SSOP	DL	48		TBD	Call TI	Call TI
CY74FCT163244CPVCT	OBSOLETE	SSOP	DL	48		TBD	Call TI	Call TI
CY74FCT163H244CPAC	OBSOLETE	TSSOP	DGG	48		TBD	Call TI	Call TI
CY74FCT163H244CPVC	OBSOLETE	SSOP	DL	48		TBD	Call TI	Call TI

(1) The marketing status values are defined as follows:
ACTIVE: Product device recommended for new designs.
LIFEBUY: TI has announced that the device will be discontinued, and a lifetime-buy period is in effect.
NRND: Not recommended for new designs. Device is in production to support existing customers, but TI does not recommend using this part in a new design.
PREVIEW: Device has been announced but is not in production. Samples may or may not be available.
OBSOLETE: TI has discontinued the production of the device.

(2) Eco Plan - The planned eco-friendly classification: Pb-Free (RoHS) or Green (RoHS & no Sb/Br) - please check http://www.ti.com/productcontent for the latest availability information and additional product content details.
TBD: The Pb-Free/Green conversion plan has not been defined.
Pb-Free (RoHS): TI's terms "Lead-Free" or "Pb-Free" mean semiconductor products that are compatible with the current RoHS requirements for all 6 substances, including the requirement that lead not exceed 0.1% by weight in homogeneous materials. Where designed to be soldered at high temperatures, TI Pb-Free products are suitable for use in specified lead-free processes.
Green (RoHS & no Sb/Br): TI defines "Green" to mean Pb-Free (RoHS compatible), and free of Bromine (Br) and Antimony (Sb) based flame retardants (Br or Sb do not exceed 0.1% by weight in homogeneous material)

(3) MSL, Peak Temp. -- The Moisture Sensitivity Level rating according to the JEDEC industry standard classifications, and peak solder temperature.

Important Information and Disclaimer: The information provided on this page represents TI's knowledge and belief as of the date that it is provided. TI bases its knowledge and belief on information provided by third parties, and makes no representation or warranty as to the accuracy of such information. Efforts are underway to better integrate information from third parties. TI has taken and continues to take reasonable steps to provide representative and accurate information but may not have conducted destructive testing or chemical analysis on incoming materials and chemicals. TI and TI suppliers consider certain information to be proprietary, and thus CAS numbers and other limited information may not be available for release.

In no event shall TI's liability arising out of such information exceed the total purchase price of the TI part(s) at issue in this document sold by TI to Customer on an annual basis.

DL (R-PDSO-G)** **PLASTIC SMALL-OUTLINE PACKAGE**

48 PINS SHOWN

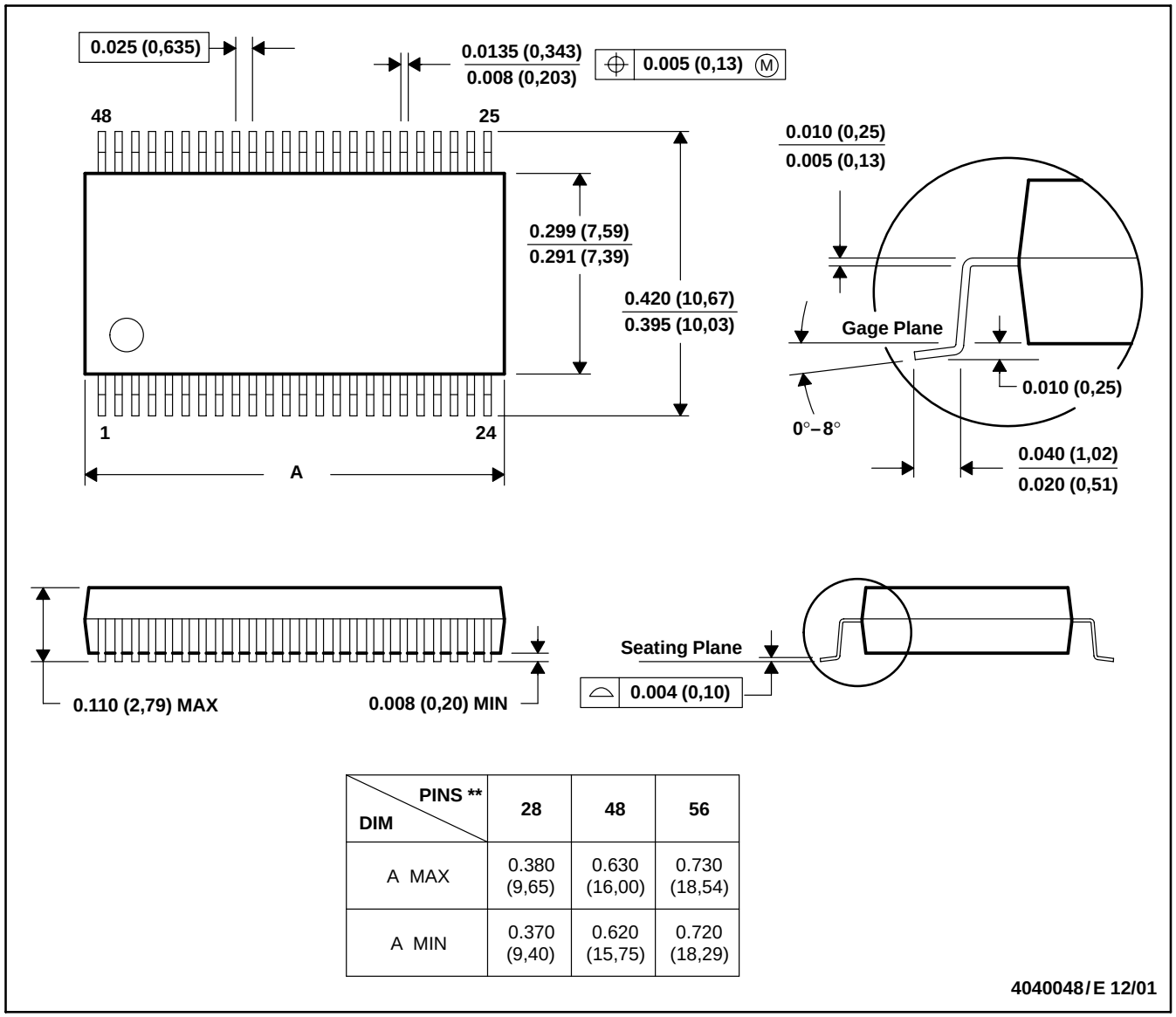

DIM \ PINS **	28	48	56
A MAX	0.380 (9,65)	0.630 (16,00)	0.730 (18,54)
A MIN	0.370 (9,40)	0.620 (15,75)	0.720 (18,29)

4040048/E 12/01

NOTES: A. All linear dimensions are in inches (millimeters).
B. This drawing is subject to change without notice.
C. Body dimensions do not include mold flash or protrusion not to exceed 0.006 (0,15).
D. Falls within JEDEC MO-118

DGG (R-PDSO-G)** **PLASTIC SMALL-OUTLINE PACKAGE**

48 PINS SHOWN

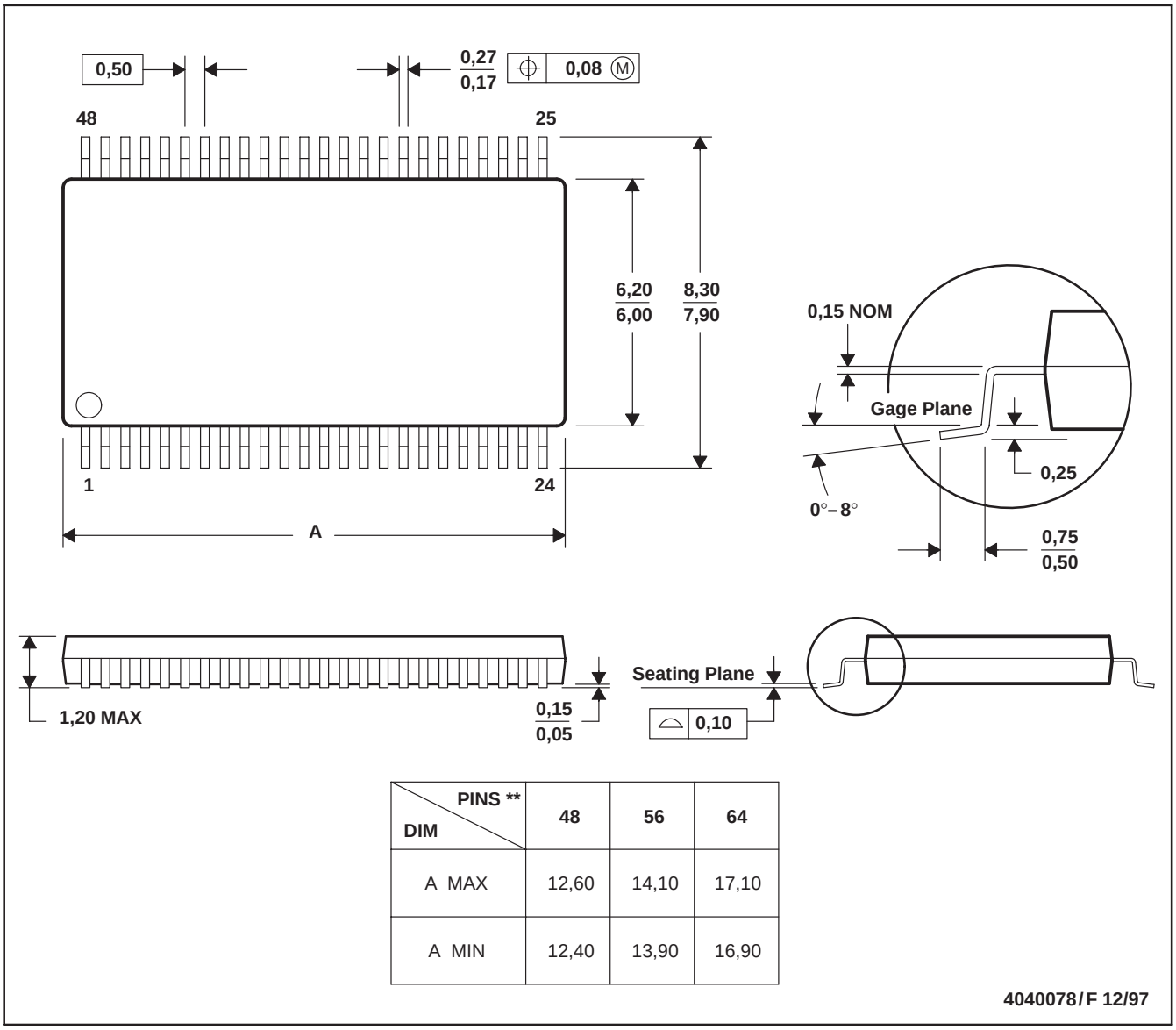

DIM \ PINS **	48	56	64
A MAX	12,60	14,10	17,10
A MIN	12,40	13,90	16,90

NOTES: A. All linear dimensions are in millimeters.
B. This drawing is subject to change without notice.
C. Body dimensions do not include mold protrusion not to exceed 0,15.
D. Falls within JEDEC MO-153

IMPORTANT NOTICE

Texas Instruments Incorporated and its subsidiaries (TI) reserve the right to make corrections, modifications, enhancements, improvements, and other changes to its products and services at any time and to discontinue any product or service without notice. Customers should obtain the latest relevant information before placing orders and should verify that such information is current and complete. All products are sold subject to TI's terms and conditions of sale supplied at the time of order acknowledgment.

TI warrants performance of its hardware products to the specifications applicable at the time of sale in accordance with TI's standard warranty. Testing and other quality control techniques are used to the extent TI deems necessary to support this warranty. Except where mandated by government requirements, testing of all parameters of each product is not necessarily performed.

TI assumes no liability for applications assistance or customer product design. Customers are responsible for their products and applications using TI components. To minimize the risks associated with customer products and applications, customers should provide adequate design and operating safeguards.

TI does not warrant or represent that any license, either express or implied, is granted under any TI patent right, copyright, mask work right, or other TI intellectual property right relating to any combination, machine, or process in which TI products or services are used. Information published by TI regarding third-party products or services does not constitute a license from TI to use such products or services or a warranty or endorsement thereof. Use of such information may require a license from a third party under the patents or other intellectual property of the third party, or a license from TI under the patents or other intellectual property of TI.

Reproduction of information in TI data books or data sheets is permissible only if reproduction is without alteration and is accompanied by all associated warranties, conditions, limitations, and notices. Reproduction of this information with alteration is an unfair and deceptive business practice. TI is not responsible or liable for such altered documentation.

Resale of TI products or services with statements different from or beyond the parameters stated by TI for that product or service voids all express and any implied warranties for the associated TI product or service and is an unfair and deceptive business practice. TI is not responsible or liable for any such statements.

Following are URLs where you can obtain information on other Texas Instruments products and application solutions:

Products		**Applications**	
Amplifiers	amplifier.ti.com	Audio	www.ti.com/audio
Data Converters	dataconverter.ti.com	Automotive	www.ti.com/automotive
DSP	dsp.ti.com	Broadband	www.ti.com/broadband
Interface	interface.ti.com	Digital Control	www.ti.com/digitalcontrol
Logic	logic.ti.com	Military	www.ti.com/military
Power Mgmt	power.ti.com	Optical Networking	www.ti.com/opticalnetwork
Microcontrollers	microcontroller.ti.com	Security	www.ti.com/security
		Telephony	www.ti.com/telephony
		Video & Imaging	www.ti.com/video
		Wireless	www.ti.com/wireless

Mailing Address: Texas Instruments
Post Office Box 655303 Dallas, Texas 75265

Copyright © 2005, Texas Instruments Incorporated