CY62138F MoBL®

2-Mbit (256 K × 8) Static RAM

Features

- High speed: 45 ns
- Wide voltage range: 4.5 V to 5.5 V
- Pin compatible with CY62138V
- Ultra low standby power
  - Typical standby current: 1 µA
  - Maximum standby current: 5 µA
- Ultra low active power
  - Typical active current: 1.6 mA @ f = 1 MHz
- Easy memory expansion with $\overline{CE}_1$, CE_2, and $\overline{OE}$ features
- Automatic power down when deselected
- Complementary metal oxide semiconductor (CMOS) for optimum speed and power
- Available in Pb-free 32-pin SOIC and 32-pin thin small outline package (TSOP) II packages

Functional Description

The CY62138F is a high performance CMOS static RAM organized as 256K words by 8 bits. This device features advanced circuit design to provide ultra low active current. This is ideal for providing More Battery Life™ (MoBL®) in portable applications. The device also has an automatic power down feature that significantly reduces power consumption when addresses are not toggling. Placing the device into standby mode reduces power consumption by more than 99% when deselected ($\overline{CE}_1$ HIGH or CE_2 LOW).

To write to the device, take Chip Enable ($\overline{CE}_1$ LOW and CE_2 HIGH) and Write Enable ($\overline{WE}$) inputs LOW. Data on the eight I/O pins (I/O_0 through I/O_7) is then written into the location specified on the address pins (A_0 through A_{17}).

To read from the device, take Chip Enable ($\overline{CE}_1$ LOW and CE_2 HIGH) and output enable ($\overline{OE}$) LOW while forcing Write Enable ($\overline{WE}$) HIGH. Under these conditions, the contents of the memory location specified by the address pins appear on the I/O pins.

The eight input and output pins (I/O_0 through I/O_7) are placed in a high impedance state when the device is deselected ($\overline{CE}_1$ HIGH or CE_2 LOW), the outputs are disabled ($\overline{OE}$ HIGH), or during a write operation ($\overline{CE}_1$ LOW and CE_2 HIGH and $\overline{WE}$ LOW).

The CY62138F device is suitable for interfacing with processors that have TTL I/P levels. It is not suitable for processors that require CMOS I/P levels. Please see Electrical Characteristics on page 4 for more details and suggested alternatives.

Logic Block Diagram

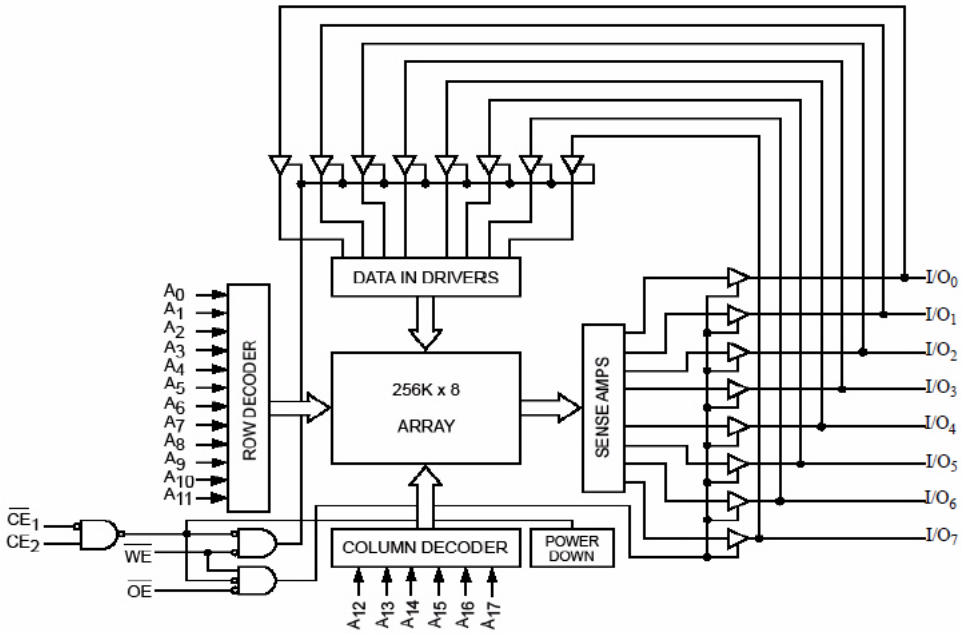

Contents

Pin Configurations **3**
Product Portfolio **3**
Maximum Ratings **4**
Operating Range **4**
Electrical Characteristics **4**
Capacitance **5**
Thermal Resistance **5**
AC Test Loads and Waveforms **5**
Data Retention Characteristics **6**
Data Retention Waveform **6**
Switching Characteristics **7**
Switching Waveforms **8**
Truth Table **10**
Ordering Information **11**
Ordering Code Definitions 11
Package Diagrams **12**
Acronyms **14**
Documents Conventions **14**
Units of Measure 14
Document History Page **15**
Sales, Solutions, and Legal Information **16**
Worldwide Sales and Design Support 16
Products 16
PSoC Solutions 16

Pin Configurations

Figure 1. 32-pin SOIC/TSOP II Pinout (Top View)

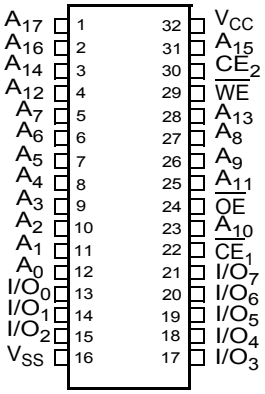

Product Portfolio

Product	V_{CC} Range (V)			Speed (ns)	Power Dissipation					
					Operating I_{CC} (mA)				Standby I_{SB2} (µA)	
					f = 1 MHz		f = f_{max}			
	Min	Typ [1]	Max		Typ [1]	Max	Typ [1]	Max	Typ [1]	Max
CY62138FLL	4.5 V	5.0 V	5.5 V	45	1.6	2.5	13	18	1	5

Note
1. Typical values are included for reference only and are not guaranteed or tested. Typical values are measured at $V_{CC} = V_{CC(typ)}$, T_A = 25 °C.

Maximum Ratings

Exceeding maximum ratings may impair the useful life of the device. These user guidelines are not tested.

Storage temperature ..... –65 °C to + 150 °C

Ambient temperature with power applied ..... –55 °C to + 125 °C

Supply voltage to ground potential ..... –0.5 V to 6.0 V (V_{CCmax} + 0.5 V)

DC voltage applied to outputs in High Z state [2, 3] ..... –0.5 V to 6.0 V (V_{CCmax} + 0.5 V)

DC Input Voltage [2, 3] ..... –0.5 V to 6.0 V (V_{CCmax} + 0.5 V)

Output Current into Outputs (LOW) ..... 20 mA

Static Discharge Voltage (MIL–STD–883, Method 3015) ..... > 2001 V

Latch-up Current ..... > 200 mA

Operating Range

Device	Range	Ambient Temperature	V_{CC} [4]
CY62138FLL	Industrial	–40 °C to +85 °C	4.5 V to 5.5 V

Electrical Characteristics

Over the Operating Range

Parameter	Description	Test Conditions		45 ns			Unit
				Min	Typ [5]	Max	
V_{OH}	Output HIGH voltage	V_{CC} = 4.5 V	I_{OH} = –1.0 mA	2.4	–	–	V
		V_{CC} = 5.5 V	I_{OH} = –0.1 mA	–	–	3.4 [6]	
V_{OL}	Output LOW voltage	I_{OL} = 2.1 mA		–	–	0.4	V
V_{IH}	Input HIGH voltage	V_{CC} = 4.5 V to 5.5 V		2.2	–	V_{CC} + 0.5	V
V_{IL}	Input LOW voltage	V_{CC} = 4.5 V to 5.5 V		–0.5	–	0.8	V
I_{IX}	Input leakage current	GND ≤ V_I ≤ V_{CC}		–1	–	+1	µA
I_{OZ}	Output leakage current	GND ≤ V_O ≤ V_{CC}, Output disabled		–1	–	+1	µA
I_{CC}	V_{CC} operating supply Current	f = f_{max} = 1/t_{RC}	V_{CC} = $V_{CC(max)}$, I_{OUT} = 0 mA, CMOS levels	–	13	18	mA
		f = 1 MHz		–	1.6	2.5	
I_{SB2} [7]	Automatic CE Power-down current CMOS inputs	$\overline{CE_1}$ ≥ V_{CC} – 0.2 V or CE_2 ≤ 0.2 V, V_{IN} ≥ V_{CC} – 0.2 V or V_{IN} ≤ 0.2 V, f = 0, V_{CC} = $V_{CC(max)}$		–	1	5	µA

Notes

2. $V_{IL(min)}$ = –2.0 V for pulse durations less than 20 ns.
3. $V_{IH(max)}$ = V_{CC} + 0.75 V for pulse durations less than 20 ns.
4. Full device AC operation assumes a 100 µs ramp time from 0 to V_{CC}(min) and 200 µs wait time after V_{CC} stabilization.
5. Typical values are included for reference only and are not guaranteed or tested. Typical values are measured at V_{CC} = $V_{CC(typ)}$, T_A = 25 °C.
6. Please note that the maximum V_{OH} limit does not exceed minimum CMOS V_{IH} of 3.5 V. If you are interfacing this SRAM with 5 V legacy processors that require a minimum V_{IH} of 3.5 V, please refer to Application Note AN6081 for technical details and options you may consider.
7. Chip enables ($\overline{CE_1}$ and CE_2) must be at CMOS level to meet the I_{SB2} / I_{CCDR} spec. Other inputs can be left floating.

Capacitance

Parameter [8]	Description	Test Conditions	Max	Unit
C_{IN}	Input capacitance	T_A = 25 °C, f = 1 MHz, V_{CC} = $V_{CC(typ)}$	10	pF
C_{OUT}	Output capacitance		10	pF

Thermal Resistance

Parameter [8]	Description	Test Conditions	32-pin SOIC	32-pin TSOP II	Unit
Θ_{JA}	Thermal resistance (Junction to Ambient)	Still air, soldered on a 3 × 4.5 inch two-layer printed circuit board	44.53	44.16	°C/W
Θ_{JC}	Thermal resistance (Junction to Case)		24.05	11.97	°C/W

AC Test Loads and Waveforms

Figure 2. AC Test Loads and Waveforms

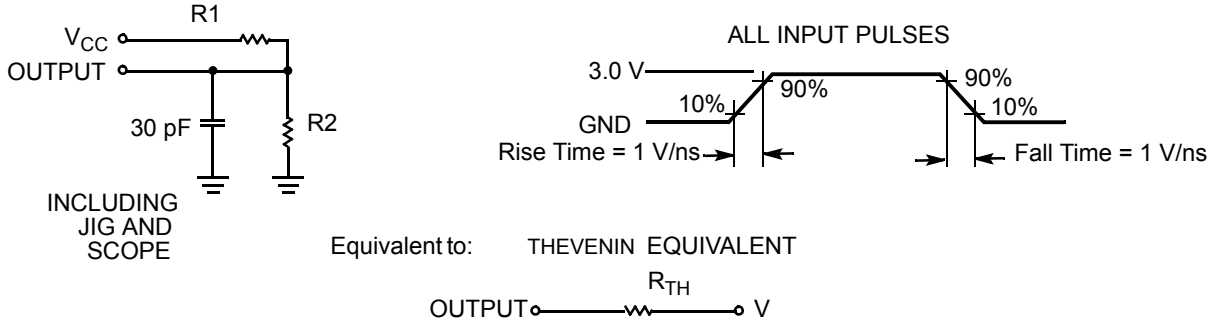

Parameters	5.0 V	Unit
R1	1800	Ω
R2	990	Ω
R_{TH}	639	Ω
V_{TH}	1.77	V

Note
8. Tested initially and after any design or process changes that may affect these parameters.

Data Retention Characteristics

Over the Operating Range

Parameter	Description	Conditions	Min	Typ [9]	Max	Unit
V_{DR}	V_{CC} for Data retention		2.0	–	–	V
I_{CCDR} [10]	Data retention current	$V_{CC} = V_{DR}$, $\overline{CE_1} \geq V_{CC} - 0.2$ V or $CE_2 \leq 0.2$ V, $V_{IN} \geq V_{CC} - 0.2$ V or $V_{IN} \leq 0.2$ V	–	1	5	µA
t_{CDR} [9]	Chip deselect to data retention time		0	–	–	ns
t_R [11]	Operation recovery time		45	–	–	ns

Data Retention Waveform

Figure 3. Data Retention Waveform [12]

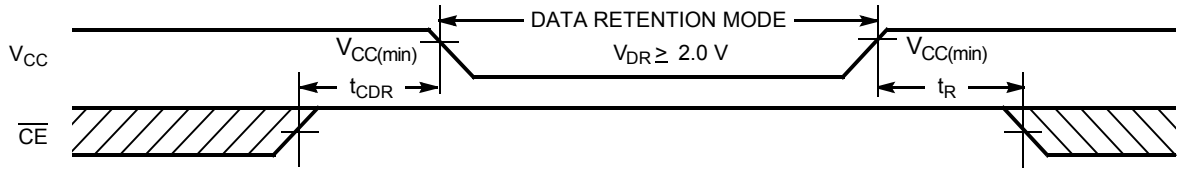

Notes

9. Tested initially and after any design or process changes that may affect these parameters. Typical values are included for reference only and are not guaranteed or tested. Typical values are measured at $V_{CC} = V_{CC(typ)}$, $T_A = 25$ °C.
10. Chip enables ($\overline{CE_1}$ and CE_2) must be at CMOS level to meet the I_{SB2} / I_{CCDR} spec. Other inputs can be left floating.
11. Full device AC operation requires linear V_{CC} ramp from V_{DR} to $V_{CC(min)} \geq 100$ µs or stable at $V_{CC(min)} \geq 100$ µs.
12. $\overline{CE}$ is the logical combination of $\overline{CE_1}$ and CE_2. When $\overline{CE_1}$ is LOW and CE_2 is HIGH, $\overline{CE}$ is LOW; when $\overline{CE_1}$ is HIGH or CE_2 is LOW, $\overline{CE}$ is HIGH.

Switching Characteristics

Over the Operating Range

Parameter [13]	Description	45 ns		Unit
		Min	Max	
Read Cycle				
t_{RC}	Read cycle time	45	–	ns
t_{AA}	Address to data valid	–	45	ns
t_{OHA}	Data hold from address change	10	–	ns
t_{ACE}	$\overline{CE}_1$ LOW and $\overline{CE}_2$ HIGH to data valid	–	45	ns
t_{DOE}	$\overline{OE}$ LOW to data valid	–	22	ns
t_{LZOE}	$\overline{OE}$ LOW to low Z [14]	5	–	ns
t_{HZOE}	$\overline{OE}$ HIGH to high Z [14, 15]	–	18	ns
t_{LZCE}	$\overline{CE}_1$ LOW and $\overline{CE}_2$ HIGH to low Z [14]	10	–	ns
t_{HZCE}	$\overline{CE}_1$ HIGH or $\overline{CE}_2$ LOW to high Z [14, 15]	–	18	ns
t_{PU}	$\overline{CE}_1$ LOW and $\overline{CE}_2$ HIGH to power-up	0	–	ns
t_{PD}	$\overline{CE}_1$ HIGH or $\overline{CE}_2$ LOW to power-down	–	45	ns
Write Cycle [16]				
t_{WC}	Write cycle time	45	–	ns
t_{SCE}	$\overline{CE}_1$ LOW and $\overline{CE}_2$ HIGH to write end	35	–	ns
t_{AW}	Address setup to write end	35	–	ns
t_{HA}	Address hold from write end	0	–	ns
t_{SA}	Address setup to write start	0	–	ns
t_{PWE}	$\overline{WE}$ pulse width	35	–	ns
t_{SD}	Data setup to write end	25	–	ns
t_{HD}	Data hold from write end	0	–	ns
t_{HZWE}	$\overline{WE}$ LOW to high Z [14, 15]	–	18	ns
t_{LZWE}	$\overline{WE}$ HIGH to low Z [14]	10	–	ns

Notes

13. Test conditions for all parameters other than tri-state parameters assume signal transition time of 3 ns (1 V/ns) or less, timing reference levels of $V_{CC(typ)}/2$, input pulse levels of 0 to $V_{CC(typ)}$, and output loading of the specified I_{OL}/I_{OH} as shown in the Figure 2 on page 5.
14. At any given temperature and voltage condition, t_{HZCE} is less than t_{LZCE} , t_{HZOE} is less than t_{LZOE}, and t_{HZWE} is less than t_{LZWE} for any given device.
15. t_{HZOE}, t_{HZCE}, and t_{HZWE} transitions are measured when the outputs enter a high impedance state.
16. The internal write time of the memory is defined by the overlap of $\overline{WE}$, $\overline{CE}_1$ = V_{IL}, and CE_2 = V_{IH}. All signals must be ACTIVE to initiate a write and any of these signals can terminate a write by going INACTIVE. The data input setup and hold timing must be referenced to the edge of the signal that terminates the write.

Switching Waveforms

Figure 4. Read Cycle 1 (Address Transition Controlled) [17, 18]

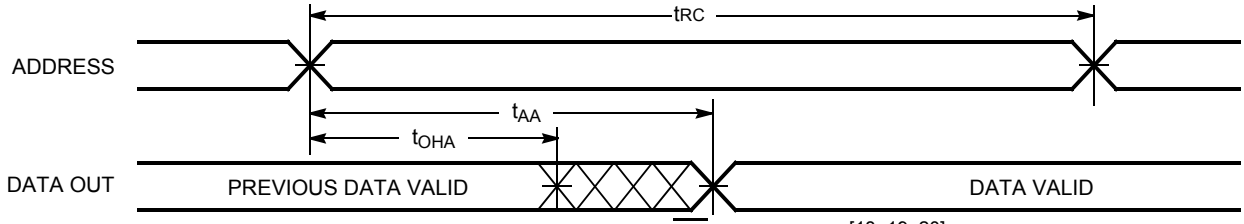

Figure 5. Read Cycle No. 2 (OE Controlled) [18, 19, 20]

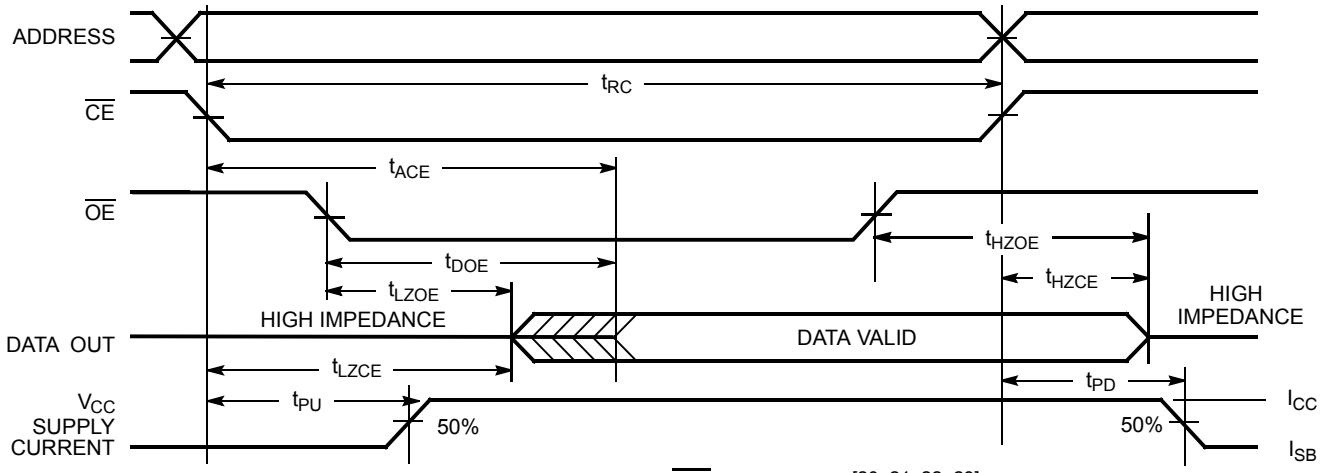

Figure 6. Write Cycle No. 1 (WE Controlled) [20, 21, 22, 23]

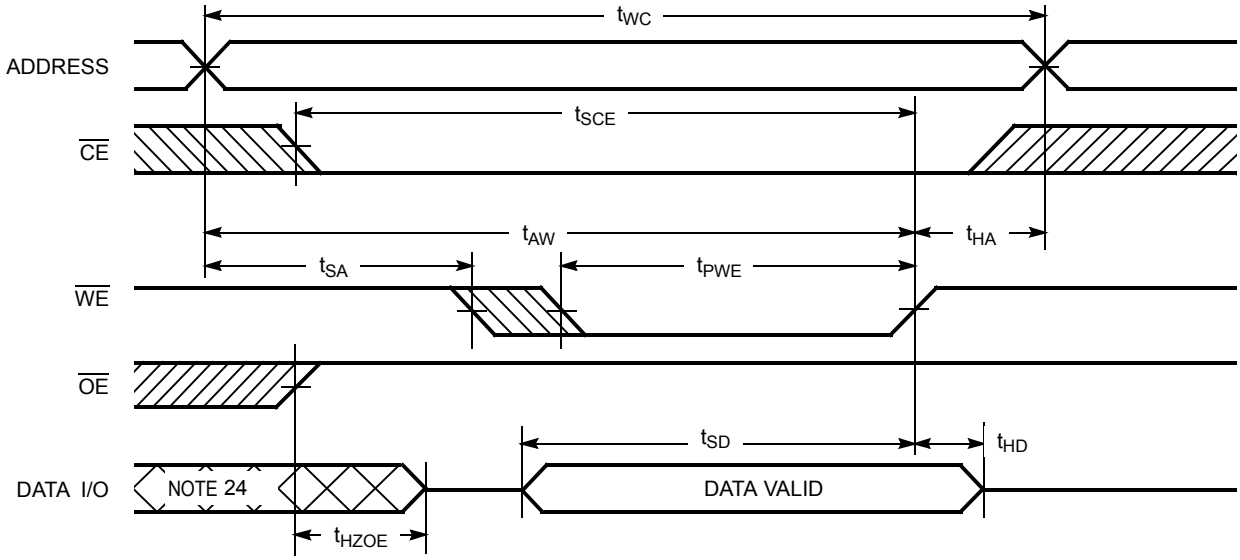

Notes

17. The device is continuously selected. $\overline{OE}$, $\overline{CE_1}$ = V_{IL}, CE_2 = V_{IH}.
18. $\overline{WE}$ is HIGH for read cycle.
19. Address valid before or similar to $\overline{CE_1}$ transition LOW and CE_2 transition HIGH.
20. $\overline{CE}$ is the logical combination of $\overline{CE_1}$ and CE_2. When $\overline{CE_1}$ is LOW and CE_2 is HIGH, $\overline{CE}$ is LOW; when $\overline{CE_1}$ is HIGH or CE_2 is LOW, $\overline{CE}$ is HIGH.
21. The internal write time of the memory is defined by the overlap of $\overline{WE}$, $\overline{CE_1}$ = V_{IL}, and CE_2 = V_{IH}. All signals must be ACTIVE to initiate a write and any of these signals can terminate a write by going INACTIVE. The data input setup and hold timing must be referenced to the edge of the signal that terminates the write.
22. Data I/O is high impedance if $\overline{OE}$ = V_{IH}.
23. If $\overline{CE_1}$ goes HIGH or CE_2 goes LOW simultaneously with $\overline{WE}$ HIGH, the output remains in high impedance state.
24. During this period, the I/Os are in output state. Do not apply input signals.

Switching Waveforms (continued)

Figure 7. Write Cycle No. 2 ($\overline{CE}_1$ or $\overline{CE}_2$ Controlled) [25, 26, 27, 28]

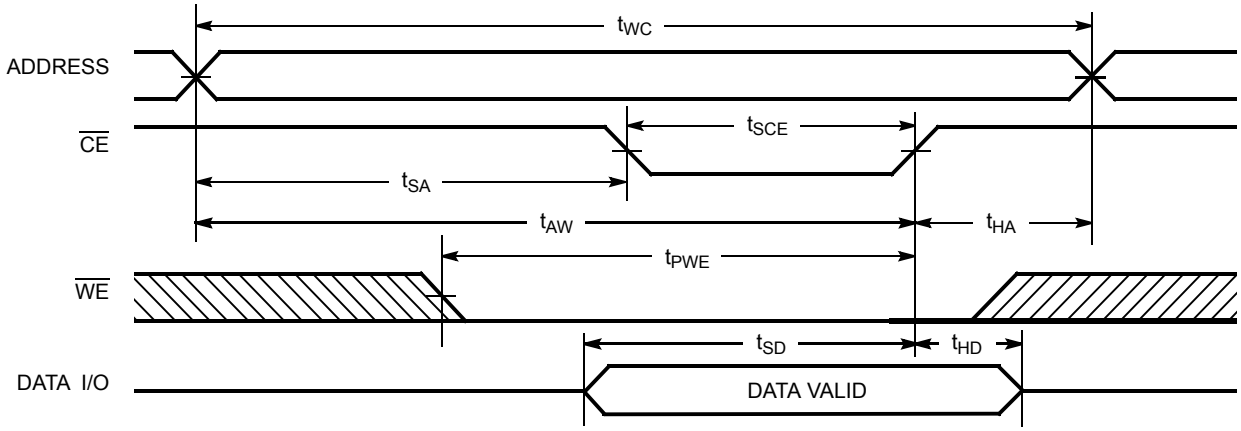

Figure 8. Write Cycle No. 3 ($\overline{WE}$ Controlled, $\overline{OE}$ LOW) [25, 28]

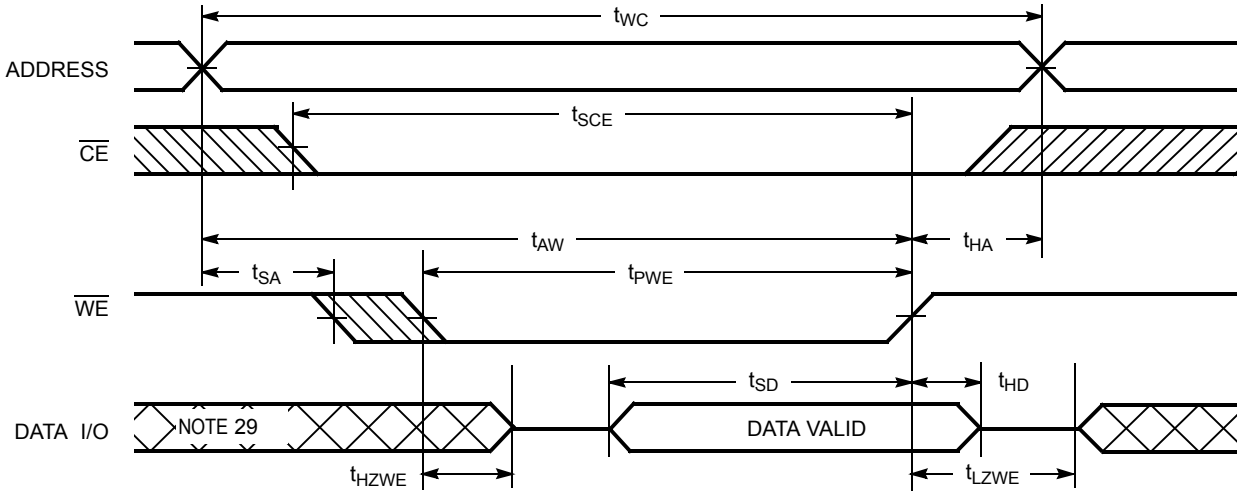

Notes
25. $\overline{CE}$ is the logical combination of $\overline{CE}_1$ and $\overline{CE}_2$. When $\overline{CE}_1$ is LOW and CE_2 is HIGH, $\overline{CE}$ is LOW; when $\overline{CE}_1$ is HIGH or CE_2 is LOW, $\overline{CE}$ is HIGH.
26. The internal write time of the memory is defined by the overlap of $\overline{WE}$, $\overline{CE}_1 = V_{IL}$, and $CE_2 = V_{IH}$. All signals must be ACTIVE to initiate a write and any of these signals can terminate a write by going INACTIVE. The data input setup and hold timing must be referenced to the edge of the signal that terminates the write.
27. Data I/O is high impedance if $\overline{OE} = V_{IH}$.
28. If $\overline{CE}_1$ goes HIGH or $\overline{CE}_2$ goes LOW simultaneously with $\overline{WE}$ HIGH, the output remains in high impedance state.
29. During this period, the I/Os are in output state. Do not apply input signals.

Truth Table

$\overline{CE_1}$	$\overline{CE_2}$	$\overline{WE}$	$\overline{OE}$	Inputs/Outputs	Mode	Power
H	X[30]	X	X	High Z	Deselect/Power-down	Standby (I_{SB})
X[30]	L	X	X	High Z	Deselect/Power-down	Standby (I_{SB})
L	H	H	L	Data out	Read	Active (I_{CC})
L	H	H	H	High Z	Output disabled	Active (I_{CC})
L	H	L	X	Data in	Write	Active (I_{CC})

Note
30. The 'X' (Don't care) state for the Chip enables ($\overline{CE}_1$ and $\overline{CE}_2$) in the truth table refer to the logic state (either HIGH or LOW). Intermediate voltage levels on these pins is not permitted.

Ordering Information

Speed (ns)	Ordering Code	Package Diagram	Package Type	Operating Range
45	CY62138FLL-45SXI	51-85081	32-pin SOIC (Pb-free)	Industrial

Contact your local Cypress sales representative for availability of these parts.

Ordering Code Definitions

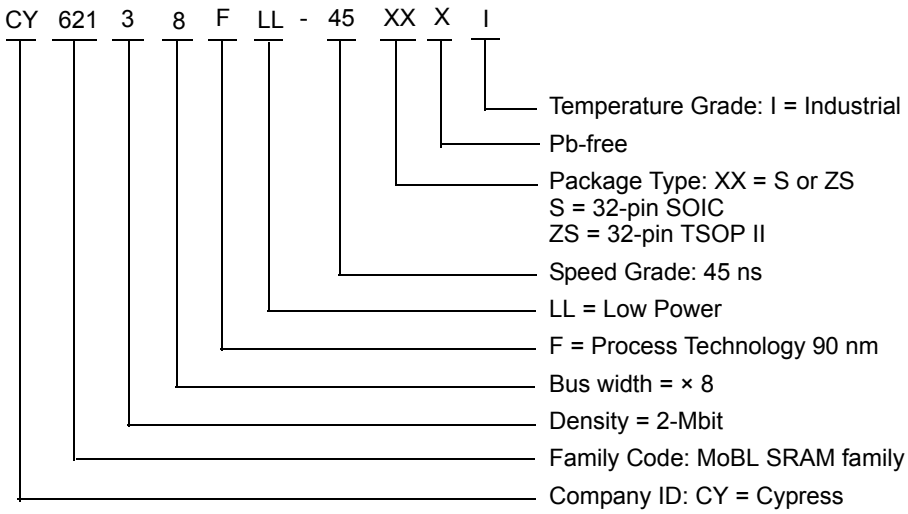

Package Diagrams

Figure 9. 32-pin SOIC (450 Mil) S32.45/SZ32.45 Package Outline, 51-85081

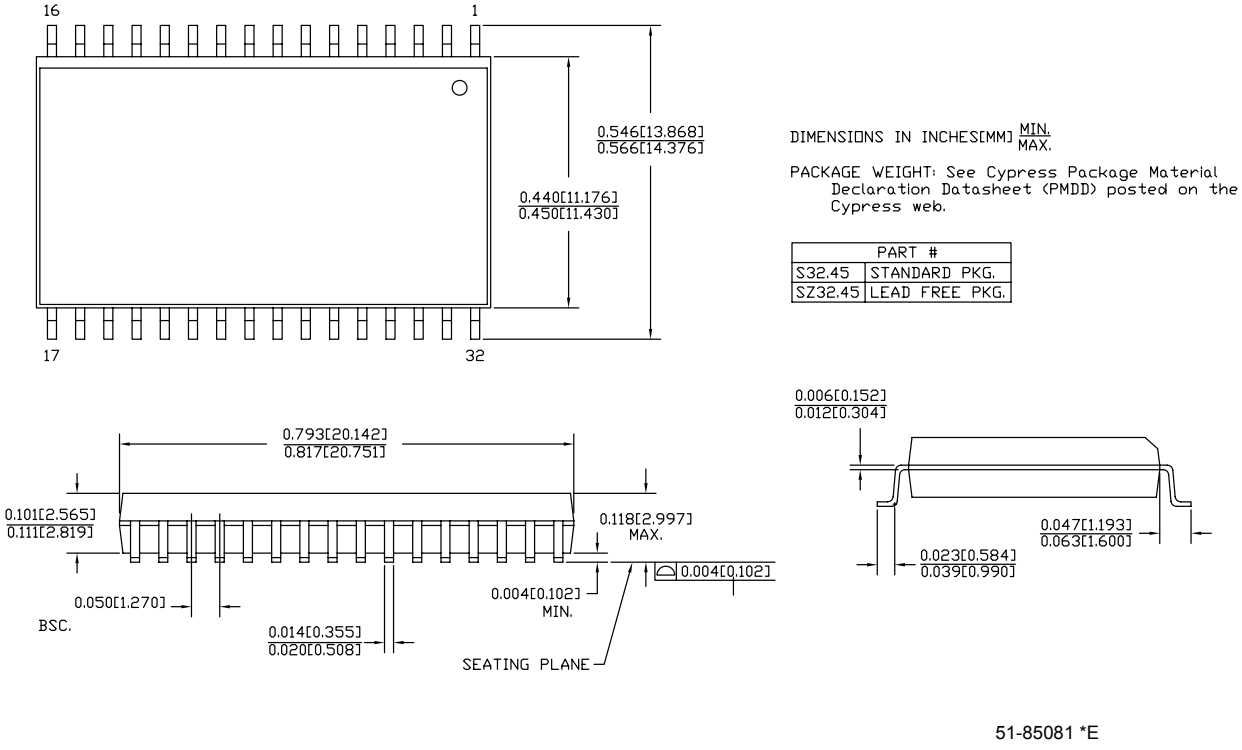

Package Diagrams (continued)

Figure 10. 32-pin TSOP II (20.95 × 11.76 × 1.0 mm) ZS32 Package Outline, 51-85095

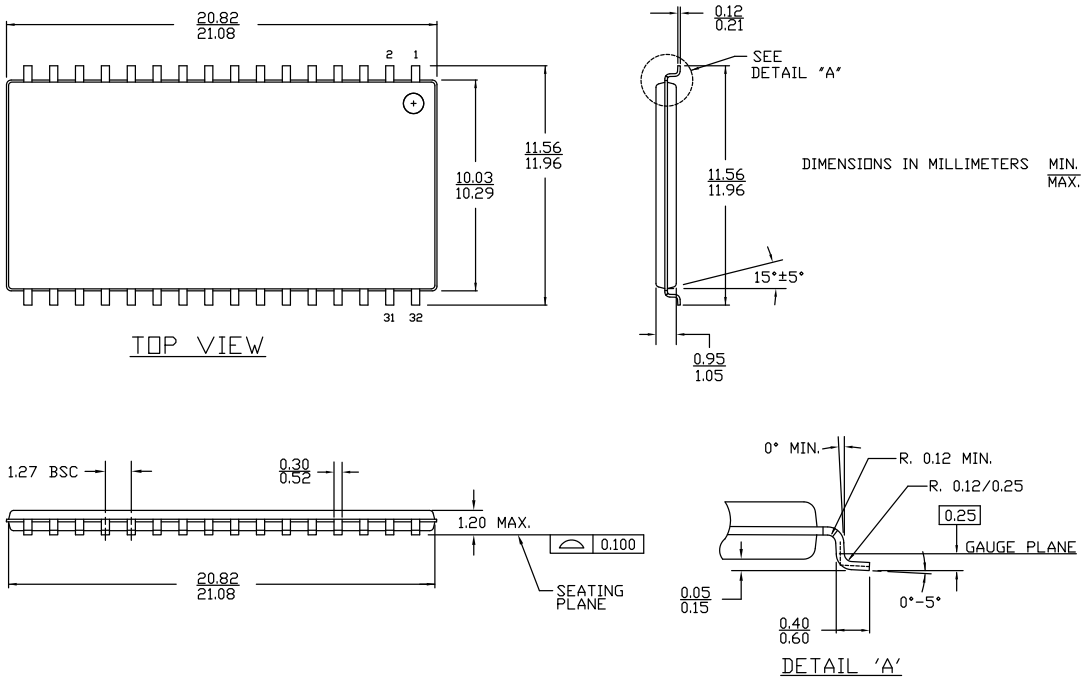

Acronyms

Acronym	Description
CMOS	Complementary Metal Oxide Semiconductor
I/O	Input/Output
$\overline{OE}$	Output Enable
SOIC	Small Outline Integrated Circuit
SRAM	Static Random Access Memory
TSOP	Thin Small Outline Package
$\overline{WE}$	Write Enable

Documents Conventions

Units of Measure

Symbol	Unit of Measure
°C	degree Celsius
MHz	megahertz
µA	microampere
µs	microsecond
mA	milliampere
ns	nanosecond
Ω	ohm
%	percent
pF	picofarad
V	volt
W	watt

Document History Page

Document Title: CY62138F MoBL®, 2-Mbit (256 K × 8) Static RAM Document Number: 001-13194				
REV.	**ECN NO.**	**Issue Date**	**Orig. of Change**	**Description of Change**
**	797956	See ECN	VKN	New Data Sheet
*A	940341	See ECN	VKN	Added footnote #7 related to I_{SB2} and I_{CCDR}
*B	3055174	13/10/2010	RAME	Updated As per new template Added Acronyms and Units of Measure table. Added Ordering Code Definitions. Footnotes updated Updated Package Diagram Figure 9 and Figure 10.
*C	3061313	15/10/2010	RAME	Minor change: Corrected “IO” to “I/O”
*D	3232735	04/18/2011	RAME	Removed the Note “For best practice recommendations, refer to the Cypress application note “System Design Guidelines” at http://www.cypress.com ” in page 1.
*E	3287636	06/20/2011	RAME	Updated Package Diagrams. Updated in new template.
*F	3846281	12/19/2012	TAVA	Updated Ordering Information (Updated part numbers). Updated Package Diagrams: spec 51-85081 – Changed revision from *C to *E.
*G	4013949	06/04/2013	MEMJ	Updated Functional Description. Updated Electrical Characteristics: Added one more Test Condition “V_{CC} = 5.5 V, I_{OH} = –0.1 mA” for V_{OH} parameter and added maximum value corresponding to that Test Condition. Added Note 6 and referred the same note in maximum value for V_{OH} parameter corresponding to Test Condition “V_{CC} = 5.5 V, I_{OH} = –0.1 mA”.

Sales, Solutions, and Legal Information

Worldwide Sales and Design Support

Cypress maintains a worldwide network of offices, solution centers, manufacturer's representatives, and distributors. To find the office closest to you, visit us at Cypress Locations.

Products

Automotive	cypress.com/go/automotive
Clocks & Buffers	cypress.com/go/clocks
Interface	cypress.com/go/interface
Lighting & Power Control	cypress.com/go/powerpsoc cypress.com/go/plc
Memory	cypress.com/go/memory
Optical & Image Sensing	cypress.com/go/image
PSoC	cypress.com/go/psoc
Touch Sensing	cypress.com/go/touch
USB Controllers	cypress.com/go/USB
Wireless/RF	cypress.com/go/wireless

PSoC Solutions

psoc.cypress.com/solutions

PSoC 1 | PSoC 3 | PSoC 5

© Cypress Semiconductor Corporation, 2007-2013. The information contained herein is subject to change without notice. Cypress Semiconductor Corporation assumes no responsibility for the use of any circuitry other than circuitry embodied in a Cypress product. Nor does it convey or imply any license under patent or other rights. Cypress products are not warranted nor intended to be used for medical, life support, life saving, critical control or safety applications, unless pursuant to an express written agreement with Cypress. Furthermore, Cypress does not authorize its products for use as critical components in life-support systems where a malfunction or failure may reasonably be expected to result in significant injury to the user. The inclusion of Cypress products in life-support systems application implies that the manufacturer assumes all risk of such use and in doing so indemnifies Cypress against all charges.

Any Source Code (software and/or firmware) is owned by Cypress Semiconductor Corporation (Cypress) and is protected by and subject to worldwide patent protection (United States and foreign), United States copyright laws and international treaty provisions. Cypress hereby grants to licensee a personal, non-exclusive, non-transferable license to copy, use, modify, create derivative works of, and compile the Cypress Source Code and derivative works for the sole purpose of creating custom software and or firmware in support of licensee product to be used only in conjunction with a Cypress integrated circuit as specified in the applicable agreement. Any reproduction, modification, translation, compilation, or representation of this Source Code except as specified above is prohibited without the express written permission of Cypress.

Disclaimer: CYPRESS MAKES NO WARRANTY OF ANY KIND, EXPRESS OR IMPLIED, WITH REGARD TO THIS MATERIAL, INCLUDING, BUT NOT LIMITED TO, THE IMPLIED WARRANTIES OF MERCHANTABILITY AND FITNESS FOR A PARTICULAR PURPOSE. Cypress reserves the right to make changes without further notice to the materials described herein. Cypress does not assume any liability arising out of the application or use of any product or circuit described herein. Cypress does not authorize its products for use as critical components in life-support systems where a malfunction or failure may reasonably be expected to result in significant injury to the user. The inclusion of Cypress' product in a life-support systems application implies that the manufacturer assumes all risk of such use and in doing so indemnifies Cypress against all charges.

Use may be limited by and subject to the applicable Cypress software license agreement.

MoBL is a registered trademark, and More Battery Life is a trademark, of Cypress Semiconductor. All products and company names mentioned in this document may be the trademarks of their respective holders.