CY28339

Intel® CK408 Mobile Clock Synthesizer

Features

- **Compliant with Intel® CK 408 rev 1.1 Mobile Clock Synthesizer specifications**
- **3.3V power supply**
- **Two differential CPU clocks**
- **Nine copies of PCI clocks**
- **Three copies configurable PCI free-running clocks**
- **Two 48 MHz clocks (USB, DOT)**
- **Five/six copies of 3V66 clocks**
- **One VCH clock**
- **One reference clock at 14.318 MHz**
- **SMBus support with read-back capabilities**
- **Ideal Lexmark profile Spread Spectrum electromagnetic interference (EMI) reduction**
- **Dial-a-Frequency™ features**
- **Dial-a-dB™ features**
- **48-pin TSSOP package**

Table 1. Frequency Table[1]

S2	S1	CPU (1:2)	3V66	66BUFF(0:2)/ 3V66(0:4)	66IN/3V66–5	PCIF, PCI	REF	USB/ DOT
1	0	100M	66M	66IN	66-MHz clock input	66IN/2	14.318M	48M
1	1	133M	66M	66IN	66-MHZ clock input	66IN/2	14.318M	48M
0	0	100M	66M	66M	66M	33 M	14.318M	48M
0	1	133M	66M	66M	66M	33 M	14.318M	48M
M	0	TCLK/2	TCLK/4	TCLK/4	TCLK/4	TCLK/8	TCLK	TCLK/2

Block Diagram

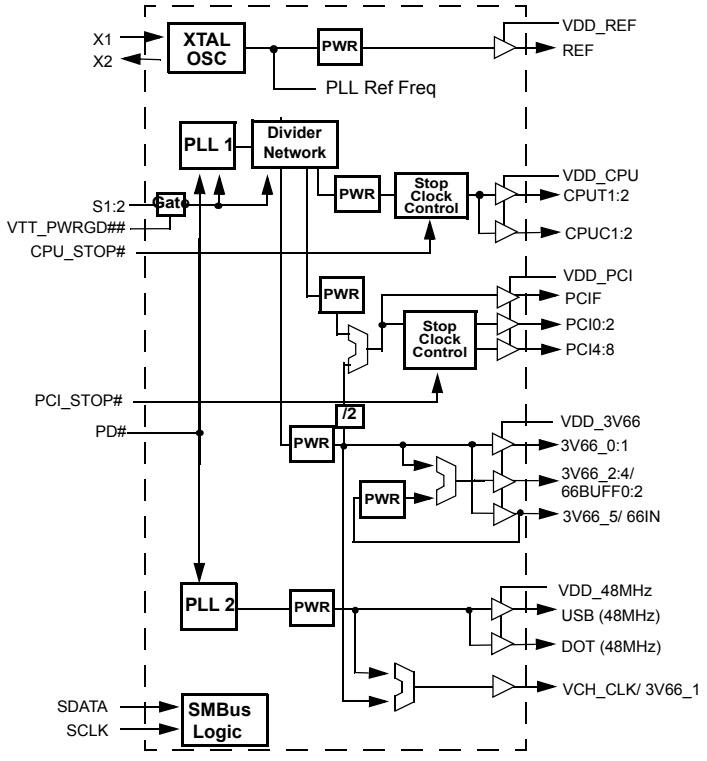

Pin Configuration

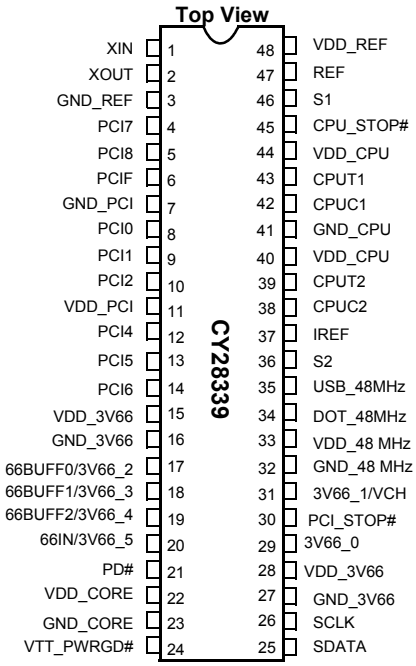

Note:

1. TCLK is a test clock driven on the XTAL_IN input during test mode. M = driven to a level between 1.0V and 1.8V. If the S2 pin is at a M level during power-up, a 0 state will be latched into the device's internal state register.

Pin Definitions

Pin Number	Name	I/O	Description
47	REF0		**3.3V 14.318-MHz clock output**.
1	XIN		**14.318-MHz crystal input**.
2	XOUT		**14.318-MHz crystal input**.
43, 42, 39, 38	CPUT1,CPUC1 CPUT2, CPUC2		**Differential CPU clock outputs**.
29	3V66_0		**3.3V 66-MHz clock output**.
31	3V66_1/VCH		**3.3V selectable through SMBus to be 66 MHz or 48 MHz**.
20	66IN/3V66_5		**66-MHz input to buffered 66BUFF and PCI or 66-MHz clock from internal VCO**.
17, 18, 19	66BUFF [2:0] /3V66 [4:2]		**66-MHz buffered outputs from 66Input or 66-MHz clocks from internal VCO**.
6	PCIF		**33 MHz clocks divided down from 66Input or divided down from 3V66**; PCIF default is free-running.
8, 9, 10, 12, 13, 14, 4, 5	PCI [0:2] PCI [4:6] PCI [7:8]		**PCI clock outputs divided down from 66Input or divided down from 3V66**; PCI [7:8] are configurable as free-running PCI through SMBus.[2]
35	USB_48M		**Fixed 48-MHz clock output**.
34	DOT_48M		**Fixed 48-MHz clock output**.
36	S2		**Special 3.3V three-level input for Mode selection**.
46	S1		**3.3V LVTTL inputs for CPU frequency selection**.
37	IREF		**A precision resistor is attached to this pin which is connected to the internal current reference**.
21	PD#		**3.3V LVTTL input for Power_Down# (active LOW)**.
30	PCI_STOP#		**3.3V LVTTL input for PCI_STOP# (active LOW)**.
45	CPU_STOP#		**3.3V LVTTL input for CPU_STOP# (active LOW)**.
24	VTT_PWRGD#		**3.3V LVTTL input is a level-sensitive strobe used to determine when S[2:1] inputs are valid and OK to be sampled (Active LOW)**. Once VTT_PWRGD# is sampled LOW, the status of this input will be ignored.
25	SDATA		**SMBus-compatible SDATA**.
26	SCLK		**SMBus-compatible SCLK**.
11, 15, 28, 40, 44, 48	VDD_PCI, VDD_3V66, VDD_CPU,VDD_REF		**3.3V power supply for outputs**.
33	VDD_48 MHz		**3.3V power supply for 48 MHz**.
22	VDD_CORE		**3.3V power supply for phase-locked loop (PLL)**.
3, 7, 16, 27, 32, 41	GND_REF, GND_PCI, GND_3V66, GND_IREF, GND_CPU		**Ground for outputs**.
23	GND_CORE		**Ground for PLL**.

Note:
2. PCI3 is internally disabled and is not accessible.

Two-Wire SMBus Control Interface

The two-wire control interface implements a Read/Write slave only interface according to SMBus specification.

The device will accept data written to the D2 address and data may read back from address D3. It will not respond to any other addresses, and previously set control registers are retained as long as power in maintained on the device.

Serial Control Registers

Following the acknowledge of the Address Byte, two additional bytes must be sent:

1. “Command code“ byte
2. “Byte count” byte.

Although the data (bits) in the command is considered “don’t care,” it must be sent and will be acknowledged. After the Command Code and the Byte Count have been acknowledged, the sequence (Byte 0, Byte 1, and Byte 2) described below will be valid and acknowledged.

Byte 0: CPU Clock Register[3,4]

Bit	@Pup	Name	Description
7	0		Spread Spectrum Enable. 0 = Spread Off, 1 = Spread On. This is a Read and Write control bit.
6	0		CPU Clock Power-down Mode Select. 0 = Drive CPUT to 2x IREF and drive CPUC LOW 1 = Tri-state all CPU outputs. This is only applicable when PD# is LOW. It is not applicable to CPU_STOP#.
5	0	3V66_1/VCH	3V66_1/VCH Frequency Select 0 = 66M selected, 1 = 48M selected. This is a Read and Write control bit.
4			Reserved
3	HW	PCI_STOP#	Reflects the current value of the internal PCI_STOP# function when read. Internally PCI_STOP# is a logical AND function of the internal SMBus register bit and the external PCI_STOP# pin.
2	HW	S2	Frequency Select Bit 2. Reflects the value of S2. This bit is Read-only.
1	HW	S1	Frequency Select Bit 1. Reflects the value of S1. This bit is Read-only.
0	1		Reserved

Byte 1: CPU Clock Register

Bit	@Pup	Name	Description
7	1		Reserved
6	0	CPUT1, CPUC1 CPUT2, CPUC2	CPUT/C Output Functionality Control when CPU_STOP# is asserted. 0 = Drive CPUT to 6x IREF and drive CPUC LOW 1 = three-state all CPU outputs. This bit will override Byte0,Bit6 such that even if it is 0, when PD# goes LOW the CPU outputs will be three-stated.
5	0	CPUT2, CPUC2	CPUT/C2 Functionality Control when CPU_STOP# is asserted. 0 = Stopped LOW,1 = Free Running. This is a Read and Write control bit.
4	0	CPUT1, CPUC1	CPUT/C1 Functionality Control When CPU_STOP# is asserted. 0 = Stopped LOW, 1 = Free Running. This is a Read and Write control bit.
3	0		Reserved
2	1	CPUT2,CPUC2	CPUT/C2 Output Control. 0 = disable, 1 = enabled. This is a Read and Write control bit.
1	1	CPUT1, CPUC1	CPUT/C1 Output Control. 0 = disable, 1 = enabled. This is a Read and Write control bit.
0	1		Reserved

Notes:

3. PU = internal pull-up. PD = internal pull-down. T = tri-level logic input with valid logic voltages of LOW = < 0.8V, T = 1.0 – 1.8V and HIGH = > 2.0V.
4. The “Pin#” column lists the relevant pin number where applicable. The “@Pup” column gives the default state at power-up.

Byte 2:PCI Clock Control Register (all bits are Read and Write functional)

Bit	@Pup	Name	Description
7	0	REF	REF Output Control. 0 = high strength, 1 = low strength.
6	1	PCI6	PCI6 Output Control. 0 = forced LOW, 1 = enabled
5	1	PCI5	PCI5 Output Control. 0 = forced LOW, 1 = enabled
4	1	PCI4	PCI4 Output Control. 0 = forced LOW, 1 = enabled
3	1		Reserved
2	1	PCI2	PCI2 Output Control. 0 = forced LOW, 1 = enabled
1	1	PCI1	PCI1 Output Control. 0 = forced LOW, 1 = enabled
0	1	PCI0	PCI0 Output Control. 0 = forced LOW, 1 = enabled

Byte 3: PCIF Clock and 48M Control Register (all bits are Read and Write functional)

Bit	@Pup	Name	Description
7	1	DOT_48M	DOT_48M Output Control. 0 = forced LOW, 1 = enabled
6	1	USB_48M	USB_48M Output Control. 0 = forced LOW,1 = enabled
5	0	PCIF	PCI_STOP# Control of PCIF. 0 = Free Running, 1 = Stopped when PCI_STOP# is asserted.
4	1	PCI8	PCI_STOP# Control of PCI8. 0 = Free Running, 1 = Stopped when PCI_STOP# is asserted.
3	1	PCI7	PCI_STOP# Control of PCI7. 0 = Free Running, 1 = Stopped when PCI_STOP# is asserted.
2	1	PCIF	PCIF Output Control. 0 = forced LOW, 1 = running
1	1	PCI_8	PCI_8 Output Control. 0 = forced LOW, 1 = running
0	1	PCI_7	PCI_7 Output Control. 0 = forced LOW, 1 = running

Byte 4: Control Register (all bits are Read and Write functional)

Bit	@Pup	Name	Description
7	0		SS2 Spread Spectrum Control Bit. 0 = down spread, 1 = center spread).
6	0		Reserved. Set = 0.
5	1	3V66_0	3V66_0 Output Enable. 0 = disable, 1 = enabled
4	1	3V66_1/VCH	3V66_1/VCH Output Enable. 0 = disable, 1 = enabled
3	1	3V66_5	3V66_5 Output Enable. 0 = disable, 1 = enabled
2	1	19	66BUFF2/3V66_4 Output Enable. 0 = disable, 1 = enabled
1	1	18	66BUFF1/3V66_3 Output Enable. 0 = disable, 1 = enabled
0	1	66BUFF0/3V66_2	66BUFF0/3V66_2 Output Enable. 0 = disable, 1 = enabled

Byte 5:Clock Control Register (all bits are Read and Write functional)

Bit	@Pup	Name	Description
7	0		SS1 Spread Spectrum Control Bit.
6	1		SS0 Spread Spectrum Control Bit.
5	0		66IN to 66M delay Control MSB.
4	0		66IN to 66M delay Control LSB.
3	0		Reserved. Set = 0.
2	0	DOT_48M	DOT_48M Edge Rate Control. When set to 1, the edge is slowed by 15%.
1	0		Reserved. Set = 0.
0	0	USB_48M	USB_48M edge rate control. When set to 1, the edge is slowed by 15%.

Byte 6: Silicon Signature Register[5] (all bits are Read-only)

Bit	@Pup	Name	Description
7	0		Revision = 0001
6	0		
5	0		
4	1		
3	0		Vendor Code = 0011
2	0		
1	1		
0	1		

Byte 7: Reserved Register

Bit	@Pup	Name	Description
7	0		Reserved. Set = 0.
6	0		Reserved. Set = 0.
5	0		Reserved. Set = 0.
4	0		Reserved. Set = 0.
3	0		Reserved. Set = 0.
2	0		Reserved. Set = 0.
1	0		Reserved. Set = 0.
0	0		Reserved. Set = 0.

Byte 8: Dial-a-Frequency Control Register N

Bit	@Pup	Name	Description
7	0		Reserved. Set = 0.
6	0	N6, MSB	These bits are for programming the PLL's internal N register. This access allows the user to modify the CPU frequency at very high resolution (accuracy). All other synchronous clocks (clocks that are generated from the same PLL, such as PCI) remain at their existing ratios relative to the CPU clock.
5	0	N5	
4	0	N4	
3	0	N3	
2	0	N2	
1	0	N3	
0	0	N0, LSB	

Byte 9: Dial-a-Frequency Control Register R

Bit	@Pup	Name	Description
7	0		Reserved. Set = 0.
6	0	R5, MSB	These bits are for programming the PLL's internal R register. This access allows the user to modify the CPU frequency at very high resolution (accuracy). All other synchronous clocks (clocks that are generated from the same PLL, such as PCI) remain at their existing ratios relative to the CPU clock.
5	0	R4	
4	0	R3	
3	0	R2	
2	0	R1	
1	0	R0	
0	0	DAF_ENB	R and N register mux selection. 0 = R and N values come from the ROM. 1 = data is loaded from DAF (SMBus) registers.

Note:
5. When writing to this register, the device will acknowledge the Write operation, but the data itself will be ignored.

Dial-a-Frequency Features

SMBus Dial-a-Frequency feature is available in this device via Byte8 and Byte9.

P is a large-value PLL constant that depends on the frequency selection achieved through the hardware selectors (S1, S0). P value may be determined from *Table 2*.

Table 2. P Value

S(1:0)	P
0 0	32005333
0 1	48008000
1 0	96016000
1 1	64010667

Dial-a-dB Features

SMBus Dial-a-dB feature is available in this device via Byte8 and Byte9.

Spread Spectrum Clock Generation (SSCG)

Spread Spectrum is a modulation technique used to minimizing EMI radiation generated by repetitive digital signals. A clock presents the greatest EMI energy at the center frequency it is generating. Spread Spectrum distributes this energy over a specific and controlled frequency bandwidth therefore causing the average energy at any one point in this band to decrease in value. This technique is achieved by modulating the clock away from its resting frequency by a certain percentage (which also determines the amount of EMI reduction). In this device, Spread Spectrum is enabled by setting specific register bits in the SMBus control bytes. *Table 3* is a listing of the modes and percentages of Spread Spectrum modulation that this device incorporates.

Table 3. Spread Spectrum

SS2	SS1	SS0	Spread Mode	Spread%
0	0	0	Down	+0.00, –0.25
0	0	1	Down	+0.00, –0.50
0	1	0	Down	+0.00, –0.75
0	1	1	Down	+0.00, –1.00
1	0	0	Center	+0.13, –0.13
1	0	1	Center	+0.25, –0.25
1	1	0	Center	+0.37, –0.37
1	1	1	Center	+0.50, –1.50

Special Functions

PCIF and IOAPIC Clock Outputs

The PCIF clock outputs are intended to be used, if required, for systems IOAPIC clock functionality. Any two of the PCIF clock outputs can be used as IOAPIC 33-Mhz clock outputs. They are 3.3V outputs will be divided down via a simple resistive voltage divider to meet specific system IOAPIC clock voltage requirements. In the event that these clocks are not required, they can be used as general PCI clocks or disabled via the assertion of the PCI_STOP# pin.

3V66_1/VCH Clock Output

The 3V66_1/VCH pin has a dual functionality that is selectable via SMBus.

Configured as DRCG (66M), SMBus Byte0, Bit 5 = “0”

The default condition for this pin is to power-up in a 66M operation. In 66M operation this output is SSCG-capable and when spreading is turned on, this clock will be modulated.

Configured as VCH (48M), SMBus Byte0, Bit 5 = “1”

In this mode, output is configured as a 48-Mhz non-spread spectrum output that is phase-aligned with other 48M outputs (USB and DOT) to within 1-ns pin-to-pin skew. The switching of 3V66_1/VCH into VCH mode occurs at system power-on. When the SMBus Bit 5 of Byte 0 is programmed from a “0” to a “1,” the 3V66_1/VCH output may glitch while transitioning to 48M output mode.

PD# (Power-down) Clarification

The PD# (power-down) pin is used to shut off all clocks prior to shutting off power to the device. PD# is an asynchronous active LOW input. This signal is synchronized internally to the device powering down the clock synthesizer. PD# is an asynchronous function for powering up the system. When PD# is LOW, all clocks are driven to a LOW value and held there and the VCO and PLLs are also powered down. All clocks are shut down in a synchronous manner so has not to cause glitches while transitioning to the LOW “stopped” state.

PD# Assertion

When PD# is sampled LOW by two consecutive rising edges of the CPUC clock, then on the next HIGH-to-LOW transition of PCIF, the PCIF clock is stopped LOW. On the next HIGH-to-LOW transition of 66BUFF, the 66BUFF clock is stopped LOW. From this time, each clock will stop LOW on its next HIGH-to-LOW transition, except the CPUT clock. The CPU clocks are held with the CPUT clock pin driven HIGH with a value of 2 × Iref, and CPUC undriven. After the last clock has stopped, the rest of the generator will be shut down.

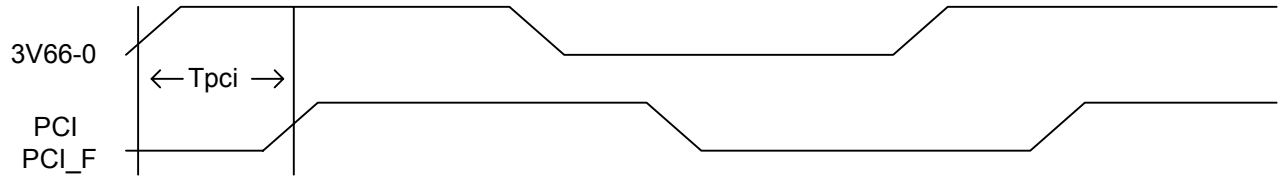

Figure 1. Unbuffered Mode – 3V66_0 to PCI and PCIF Phase Relationship

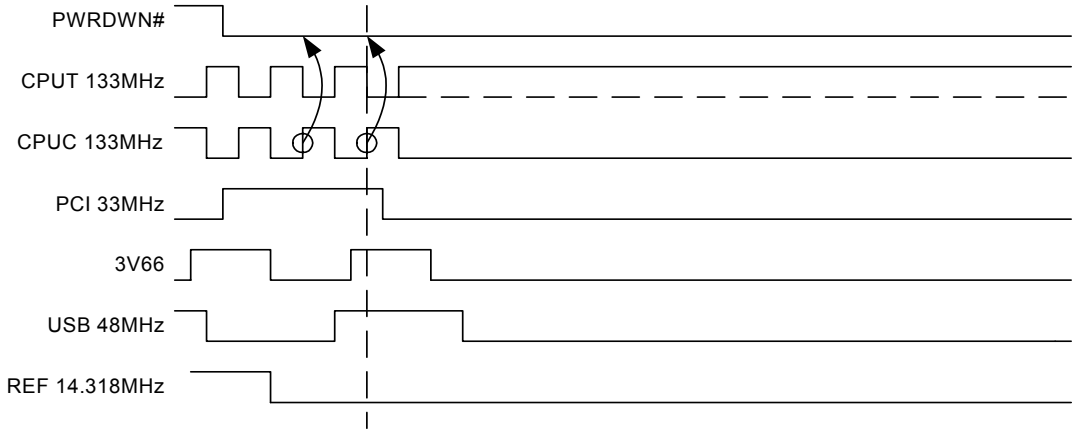

Figure 2. Power-down Assertion Timing Waveforms – Unbuffered Mode

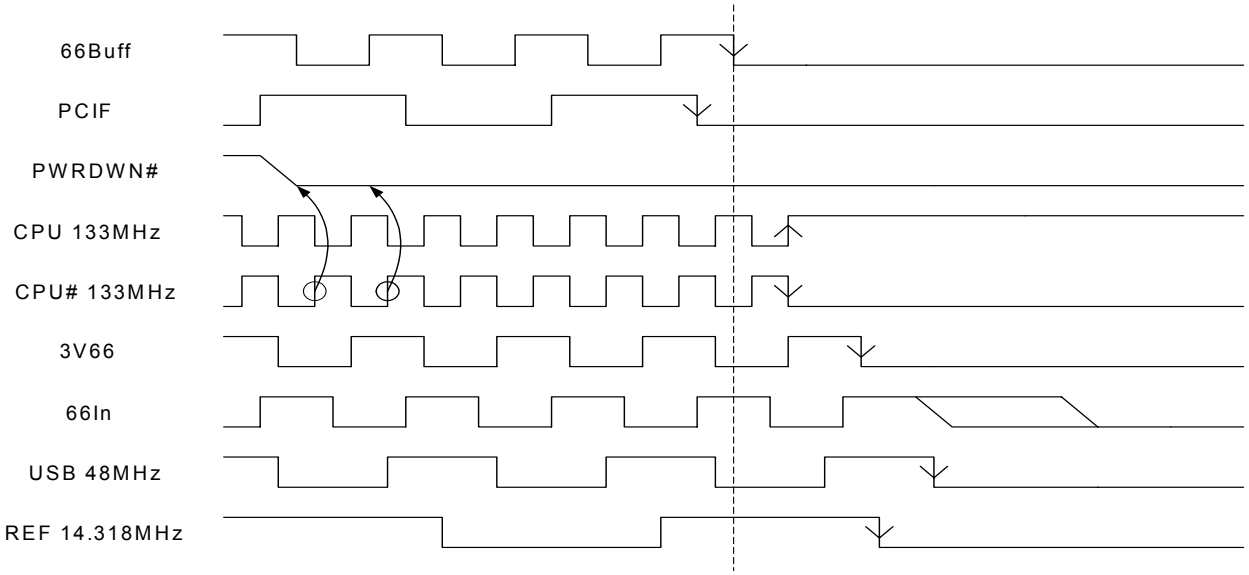

Figure 3. Power-down Assertion Timing Waveforms Figure – Buffered Mode

PD# Deassertion

The power-up latency between PD# rising to a valid logic ‘1’ level and the starting of all clocks is less than 3.0 ms.

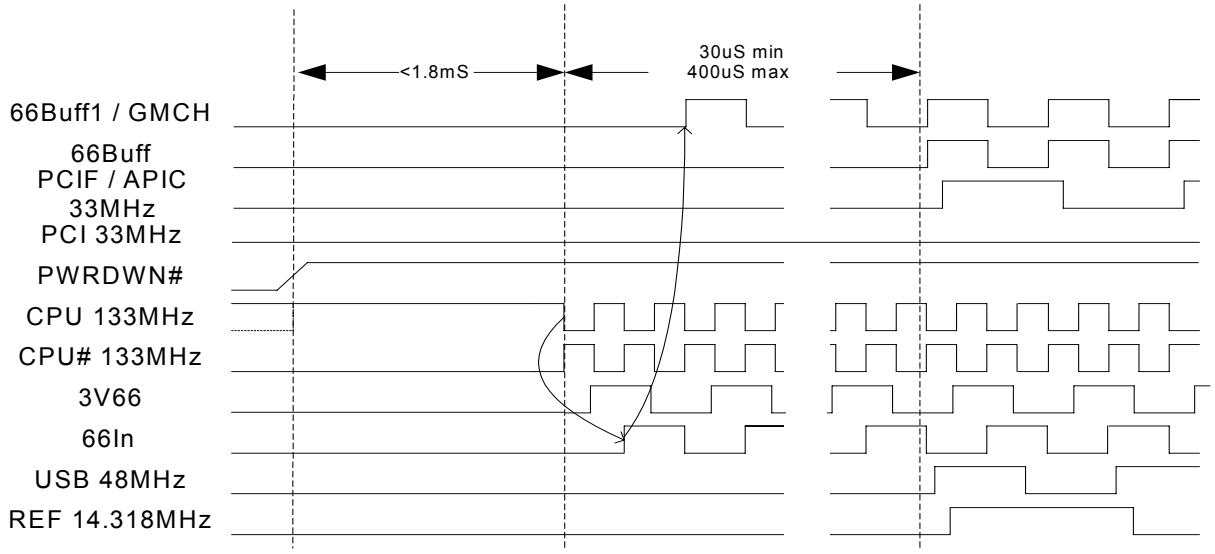

Figure 4. Power-down Deassertion Timing Waveforms – Buffered Mode

CPU_STOP# Clarification

The CPU_STOP# signal is an active LOW input used to synchronously stop and start the CPU output clocks while the rest of the clock generator continues to function.

CPU_STOP# Assertion

When CPU_STOP# pin is asserted, all CPUT/C outputs that are set with the SMBus configuration to be stoppable via assertion of CPU_STOP# will be stopped after being sampled by two falling CPUT/C clock edges. The final state of the stopped CPU signals is CPUT = HIGH and CPU0C = LOW. There is no change to the output drive current values during the stopped state. The CPUT is driven HIGH with a current value equal to (Mult 0 “select”) × (Iref), and the CPUC signal will not be driven. Due to external pull-down circuitry CPUC will be LOW during this stopped state.

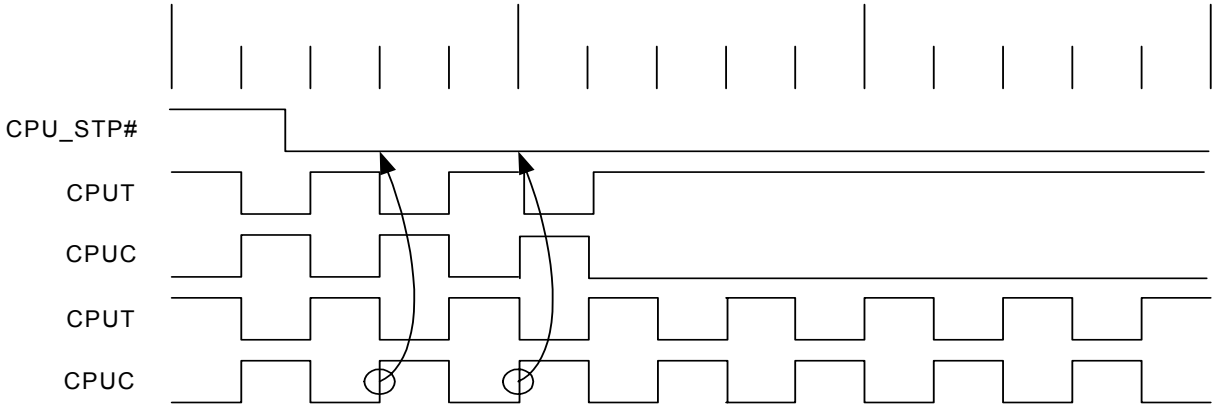

Figure 5. CPU_STOP# Assertion Waveform

CPU_STOP# Deassertion

The deassertion of the CPU_STOP# signal will cause all CPUT/C outputs that were stopped to resume normal operation in a synchronous manner (meaning that no short or stretched clock pulses will be produces when the clock resumes). The maximum latency from the deassertion to active outputs is no more than two CPUC clock cycles.

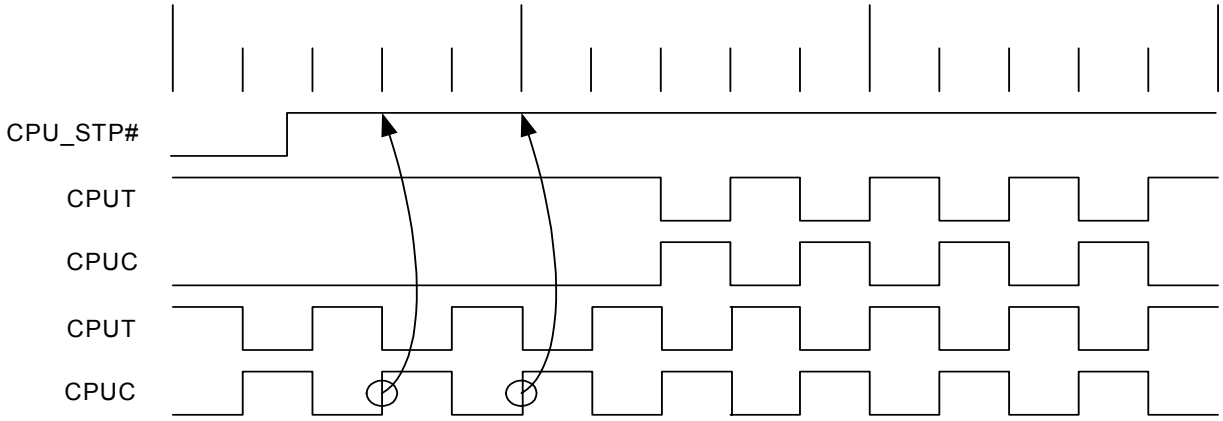

Figure 6. CPU_STOP# De-assertion Waveform

Three-state Control of CPU Clocks Clarification

During CPU_STOP# and PD# modes, CPU clock outputs may be set to driven or undriven (tri-state) by setting the corresponding SMBus entry in Bit6 of Byte0 and Bit6 of Byte1.

PCI_STOP# Assertion

The PCI_STOP# signal is an active LOW input used for synchronous stopping and starting the PCI outputs while the rest of the clock generator continues to function. The set-up time for capturing PCI_STOP# going LOW is 10 ns (t_{setup}) (see *Figure 2*.) The PCIF clocks will not be affected by this pin if their control bits in the SMBus register are set to allow them to be free running.

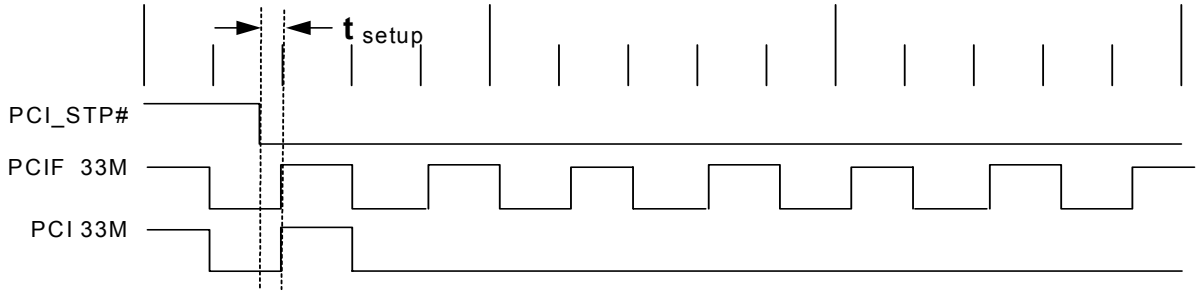

Figure 7. PCI_STOP# Assertion Waveform

PCI_STOP# Deassertion

The deassertion of the PCI_STOP# signal will cause all PCI(0:2, 4:8) and stoppable PCIF clocks to resume running in a synchronous manner within two PCI clock periods after PCI_STOP# transitions to a HIGH level.

The PCI STOP function is controlled by two inputs. One is the device PCI_STOP# pin number 34 and the other is SMBus Byte 0,Bit 3. These two inputs to the function are logically AND'ed. If either the external pin or the internal SMBus register bit is set LOW, the stoppable PCI clocks will be stopped in a logic LOW state. Reading SMBus Byte 0,Bit 3 will return a 0 value if either of these control bits are set LOW (which indicates that the devices stoppable PCI clocks are not running).

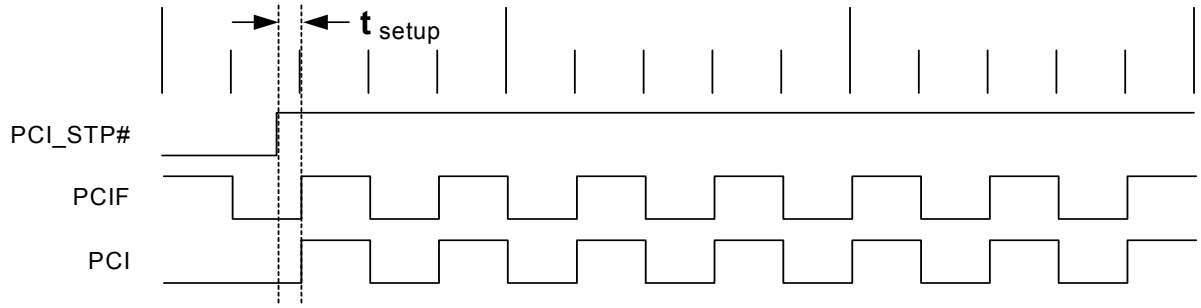

Figure 8. PCI_STOP# Deassertion Waveform

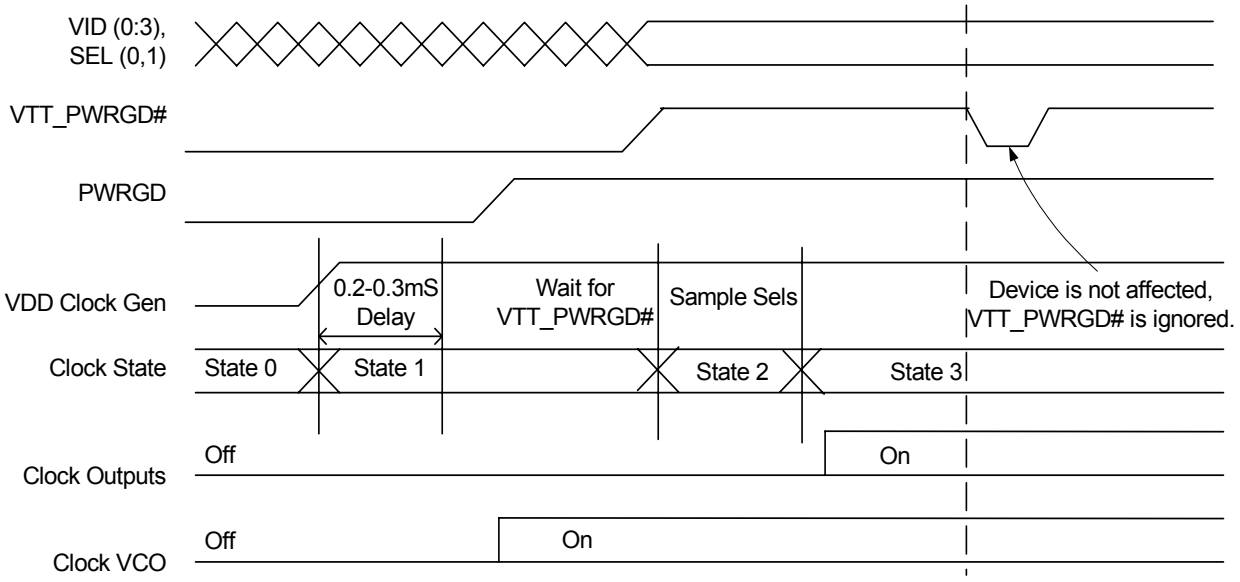

Figure 9. VTT_PWRGD# Timing Diagram

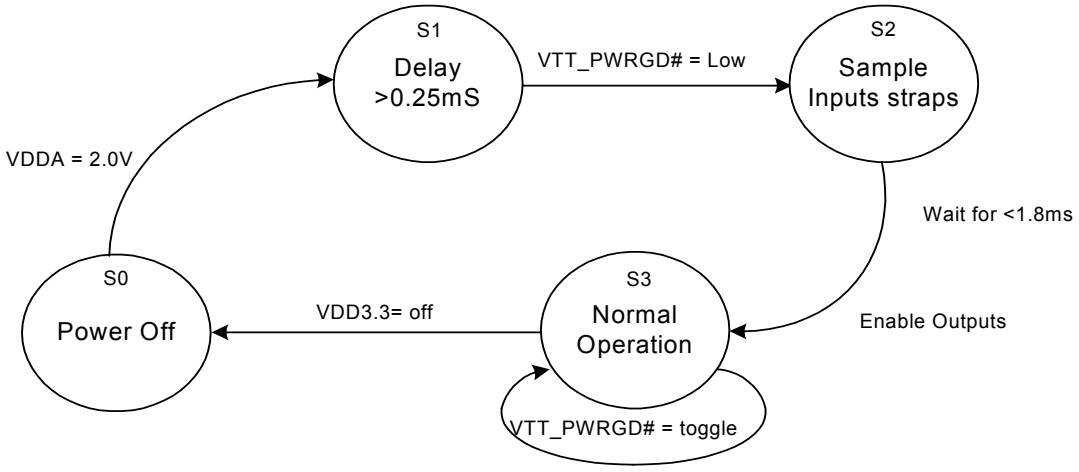

Figure 10. Clock Generator Power-up/Run State Program

Iout is selectable depending on implementation. The parameters above apply to all configurations. Vout is the voltage at the pin of the device.

The various output current configurations are shown in the host swing select functions table. For all configurations, the deviation from the expected output current is ±7% as shown in the current accuracy table.

Table 4. CPU Clock Current Select Function

Board Target Trace/Term Z	Reference R, Iref – Vdd (3*Rr)	Output Current	Voh @ Z
50Ω	Rr = 330 1%, Iref = 3.33mA	Ioh = 6*Iref	1.0V @ 50
50Ω	Rr = 475 1%, Iref = 2.32mA	Ioh = 6*Iref	0.7V @ 50

Table 5. Group Timing Relationship and Tolerances

Description	Offset	Tolerance	Conditions
3V66 to PCI	2.5 ns	±1.0 ns	3V66 leads PCI (unbuffered mode)
USB_48M to DOT_48M Skew	0.0 ns	±1.0 ns	0 degrees phase shift
66BUFF(0:2) to PCI offset	2.5 ns	±1.0 ns	66BUFF leads PCI (buffered mode)

USB_48M and DOT_48M Phase Relationship

The USB_48M and DOT_48M clocks are in phase. It is understood that the difference in edge rate will introduce some inherent offset. When 3V66_1/VCH clock is configured for VCH (48-MHz) operation it is also in phase with the USB and DOT outputs. See *Figure 11*.

66IN to 66BUFF(0:2) Buffered Prop Delay

The 66IN to 66BUFF(0:2) output delay is shown in *Figure 12*.The Tpd is the prop delay from the input pin (66IN) to the output pins (66BUFF[0:2]). The outputs' variation of Tpd is described in the AC parameters section of this data sheet. The measurement taken at 1.5V.

66BUFF(0:2) to PCI Buffered Clock Skew

Figure 13 shows the difference (skew) between the 3V33(0:5) outputs when the 66M clocks are connected to 66IN. This offset is described in the Group Timing Relationship and Tolerances section of this data sheet. The measurements were taken at 1.5V.

3V66 to PCI Un-Buffered Clock Skew

Figure 1 shows the timing relationship between 3V66_0 and PCI(0:2,4:8) and PCIF when configured to run in the unbuffered mode.

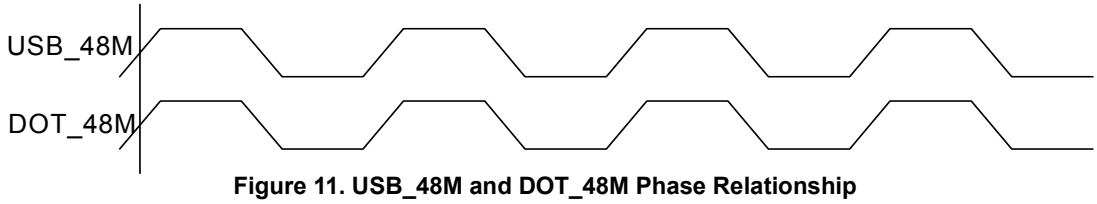

Figure 11. USB_48M and DOT_48M Phase Relationship

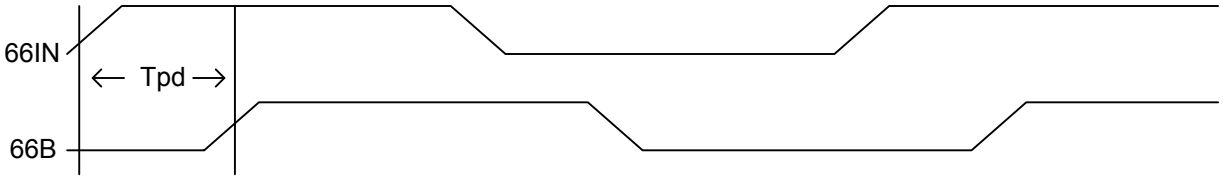

Figure 12. 66IN to 66BUFF(0:2) Output Delay Figure

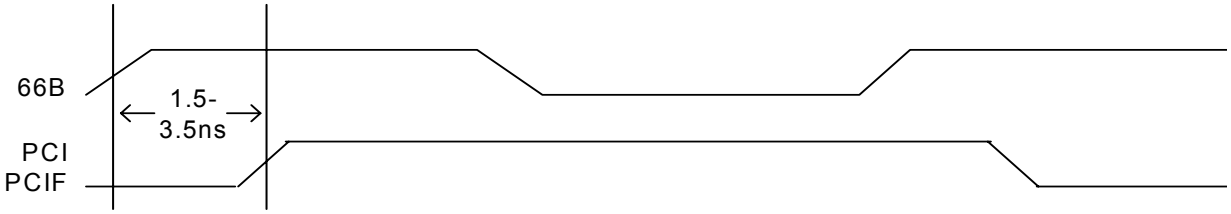

Figure 13. Buffer Mode – 33V66_0; 66BUFF(0:2) Phase Relationship

Buffer Characteristics

Current Mode CPU Clock Buffer Characteristics

The current mode output buffer detail and current reference circuit details are contained in the previous table of this data sheet. The following parameters are used to specify output buffer characteristics:

1. Output impedance of the current mode buffer circuit – Ro (see *Figure 14*).
2. Minimum and maximum required voltage operation range of the circuit – Vop (see *Figure 14*).
3. Series resistance in the buffer circuit – Ros (see *Figure 14*).
4. Current accuracy at given configuration into nominal test load for given configuration.

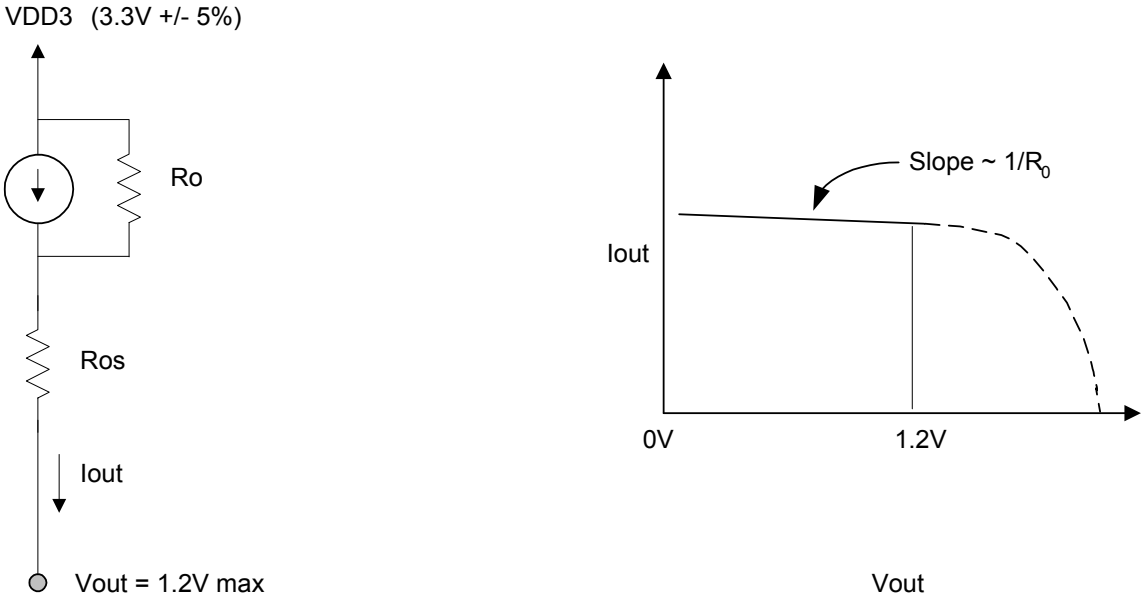

Figure 14. Buffer Characteristics

Table 6. Host Clock (HCSL) Buffer Characteristics

Characteristic	Min.	Max.
Ro	3000Ω (recommended)	N/A
Ros		
Vout	N/A	1.2V

Table 7. Maximum Lumped Capacitive Output Loads

Clock	Max Load	Units
PCI Clocks	30	pF
3V66	30	pF
66BUFF	30	pF
USB_48M Clock	20	pF
DOT_48M	10	pF
REF Clock	50	pF

Absolute Maximum Conditions

Parameter	Description	Condition	Min.	Max.	Unit
V_{DD}	Core Supply Voltage		–0.5	4.6	V
V_{DD_A}	Analog Supply Voltage		–0.5	4.6	V
V_{IN}	Input Voltage	Relative to V_{SS}	–0.5	V_{DD} + 0.5	VDC
T_S	Temperature, Storage	Non Functional	–65	150	°C
T_A	Temperature, Operating Ambient	Functional	0	70	°C
T_J	Temperature, Junction	Functional	–	150	°C
ESD_{HBM}	ESD Protection (Human Body Model)	MIL-STD-883, Method 3015	2000	–	Volts
$Ø_{JC}$	Dissipation, Junction to Case	Mil-Spec 883E Method 1012.1	45		°C/W
$Ø_{JA}$	Dissipation, Junction to Ambient	JEDEC (JESD 51)	15		°C/W
UL-94	Flammability Rating	At 1/8 in.	V–0		
MSL	Moisture Sensitivity Level		1		

DC Electrical Specifications

Parameter	Description	Condition	Min.	Max.	Unit
VDD_A, VDD_REF, VDD_PCI, VDD_3V66, VDD_48, VDD_CPU	3.3 Operating Voltage	3.3 ± 5%	3.135	3.465	V
$I_{DD3.3V}$	Dynamic Supply Current	All frequencies at maximum values	–	280	mA
$I_{PD3.3V}$	Power Down Supply Current	PD# Asserted	–		mA
C_{IN}	Input Pin Capacitance		–	5	pF
C_{OUT}	Output Pin Capacitance		–	6	pF
L_{IN}	Pin Inductance		–	7	nH
C_{XTAL}	Crystal Pin Capacitance	Measured from the XIN	30	42	pF

AC Electrical Specifications

Parameter	Description	Condition	Min.	Max.	Unit
Crystal					
T_{DC}	XIN Duty Cycle	The device will operate reliably with input duty cycles up to 30/70 but the REF clock duty cycle will not be within specification	47.5	52.5	%
T_{PERIOD}	XIN period	When Xin is driven from an external clock source	69.841	71.0	ns
T_R / T_F	XIN Rise and Fall Times	Measured between $0.3V_{DD}$ and $0.7V_{DD}$	–	10.0	ns
T_{CCJ}	XIN Cycle to Cycle Jitter	As an average over 1μs duration	–	500	ps
CPU at 0.7V					
T_{DC}	CPUT and CPUC Duty Cycle	Measured at crossing point V_{OX}	45	55	%
T_{PERIOD}	66MHz CPUT and CPUC Period	Measured at crossing point V_{OX}	14.85	15.3	ns
T_{PERIOD}	100MHz CPUT and CPUC Period	Measured at crossing point V_{OX}	9.85	10.2	ns
T_{PERIOD}	133MHz CPUT and CPUC Period	Measured at crossing point V_{OX}	7.35	7.65	ns
T_{PERIOD}	200MHz CPUT and CPUC Period	Measured at crossing point V_{OX}	4.85	5.1	ns
T_{SKEW}	Any CPUT/C to CPUT/C Clock Skew	Measured at crossing point V_{OX}	–	100	ps
T_{CCJ}	CPUT/C Cycle to Cycle Jitter	Measured at crossing point V_{OX}	–	150	ps

AC Electrical Specifications (continued)

Parameter	Description	Condition	Min.	Max.	Unit
T_R / T_F	CPUT and CPUC Rise and Fall Times	Measured from Vol= 0.175 to Voh = 0.525V	175	700	ps
T_{RFM}	Rise/Fall Matching	Determined as a fraction of $2*(T_R-T_F)/(T_R+T_F)$	–	20	%
ΔT_R	Rise Time Variation		–	125	ps
ΔT_F	Fall Time Variation		–	125	ps
V_{OX}	Crossing Point Voltage at 0.7V Swing		280	430	mv
CPU at 1.0 Volts					
T_{DC}	CPUT and CPUC Duty Cycle	Measured at crossing point V_{OX}	45	55	%
T_{PERIOD}	66MHz CPUT and CPUC Period	Measured at crossing point V_{OX}	14.85	15.3	ns
T_{PERIOD}	100MHz CPUT and CPUC Period	Measured at crossing point V_{OX}	9.85	10.2	ns
T_{PERIOD}	133MHz CPUT and CPUC Period	Measured at crossing point V_{OX}	7.35	7.65	ns
T_{PERIOD}	200MHz CPUT and CPUC Period	Measured at crossing point V_{OX}	4.85	5.1	ns
T_{SKEW}	Any CPUT/C to CPUT/C Clock Skew	Measured at crossing point V_{OX}	–	100	ps
T_{CCJ}	CPUT/C Cycle to Cycle Jitter	Measured at crossing point V_{OX}	–	150	ps
T_R / T_F	CPUT and CPUC Rise and Fall Times	Measured from Vol= 0.175 to Voh = 0.525V	175	467	ps
V_{OX}	Crossing Point Voltage at 0.7V Swing		510	760	mv
SE_ ΔSlew	Absolute Single-ended Rise/Fall Waveform Symmetry		–	325	ps
3V66					
T_{DC}	3V66 Duty Cycle	Measurement at 1.5V	45	55	%
T_{PERIOD}	3V66 Period	Measured at crossing point V_{OX}	15.0	15.3	ns
T_{HIGH}	3V66 High Time	Measurement at 2.4V	4.95	–	ns
T_{LOW}	3V66 Low Time	Measurement at 0.4V	4.55	–	ns
T_R / T_F	3V66 Rise and Fall Times	Measured between 0.4V and 2.4V	0.5	2.0	ns
$T_{SKEWUN-BUFFERED}$	Any 3V66 to Any 3V66 Clock Skew	Measurement at 1.5V	–	500	ps
$T_{SKEW-BUFFERED}$	Any 3V66 to Any 3V66 Clock Skew	Measurement at 1.5V	–	250	ps
T_{CCJ}	3V66 Cycle to Cycle Jitter	Measurement at 1.5V	–	250	ps
66BUFF					
T_{DC}	66BUFF Duty Cycle	Measurement at 1.5V	45	55	%
T_R / T_F	66BUFF Rise and Fall Times	Measured between 0.4V and 2.4V	0.5	2.0	ns
T_{SKEW}	Any 66BUFF to Any 66BUFF Skew	Measurement at 1.5V	–	175	ps
T_{CCJ}	66BUFF Cycle to Cycle Jitter	Measurement at 1.5V		100	ps
T_{PD}	66IN to 66BUFF(Propagation Delay)	Measurement at 1.5V	2.5	4.5	ns
PCI /PCIF					
T_{DC}	PCI /PCIF Duty Cycle	Measurement at 1.5V	45	55	%
T_{PERIOD}	PCI /PCIF Period	Measured at crossing point V_{OX}	30		ns
T_{HIGH}	PCI and PCIF high time	Measurement at 2.4V	12.0	–	nS
T_{LOW}	PCI and PCIF low time	Measurement at 0.4V	12.0	–	nS
T_R / T_F	PCI and PCIF rise and fall times	Measured between 0.4V and 2.4V	0.5	2.0	nS
T_{SKEW}	Any PCI clock to Any PCI clock Skew	Measurement at 1.5V	–	500	pS

AC Electrical Specifications (continued)

Parameter	Description	Condition	Min.	Max.	Unit
T_{CCJ}	PCIF and PCI Cycle to Cycle Jitter	Measurement at 1.5V	–	250	ps
DOT_48M					
T_{DC}	DOT_48M Duty Cycle	Measurement at 1.5V	45	55	%
T_{PERIOD}	DOT_48M Period	Measurement at 1.5V	20.83	20.83	ns
T_R / T_F	DOT_48M Rise and Fall Times	Measured between 0.4V and 2.4V	0.5	1.0	ns
T_{CCJ}	DOT_48M Cycle to Cycle Jitter	Measurement at 1.5V	–	350	ps
USB_48M					
T_{DC}	USB_48M Duty Cycle	Measurement at 1.5V	45	55	%
T_{PERIOD}	USB_48M Period	Measurement at 1.5V	20.82	20.83	ns
T_R / T_F	USB_48M Rise and Fall Times	Measured between 0.4V and 2.4V	1.0	2.0	ns
T_{CCJ}	DOT_48M Cycle to Cycle Jitter	Measurement at 1.5V	–	350	ps
REF					
T_{DC}	REF Duty Cycle	Measurement at 1.5V	45	55	%
T_{PERIOD}	REF Period	Measurement at 1.5V	69.827	69.855	ns
T_R / T_F	REF Rise and Fall Times	Measured between 0.4V and 2.4V	1.0	4.0	V/ns
T_{CCJ}	REF Cycle to Cycle Jitter	Measurement at 1.5V	–	1000	ps
ENABLE/DISABLE and SETUP					
T_{PZL}/T_{PZH}	Output Enable Delay (All Outputs)	When XIN is driven from external clock source	1.0	10.0	ns
T_{PZL}/T_{PZH}	Output Disable Delay (All Outputs)		1.0	10.0	ns
T_{STABLE}	Clock Stabilization from Power-up		–	3.0	ms
T_{SS}	Stopclock Set Up Time	CPU_STOP# and PIC_STOP# set up time with respect to PCIF clock to guarantee that the effected clock will stop or start at the next PCIF clock's rising edge.	10.0	–	ns
T_{SH}	Stopclock Hold Time		0	–	ns
T_{SU}	Oscillator Start-up time	When crystal meets min. 40Ω device series resistance specification			

Test and Measurement Set-up

For Differential CPU Output Signals

The following diagram shows lumped test load configurations for the differential Host Clock Outputs.

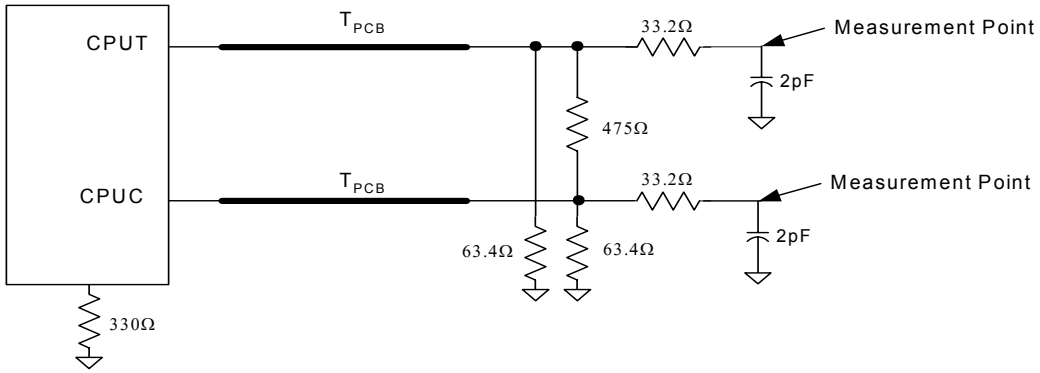

Figure 15. 1.0V Test Load Termination

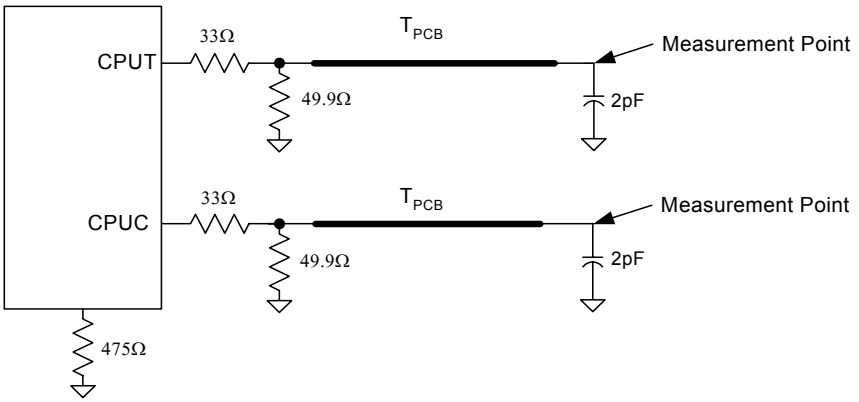

Figure 16. 0.7V Test Load Termination

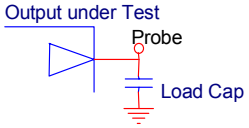

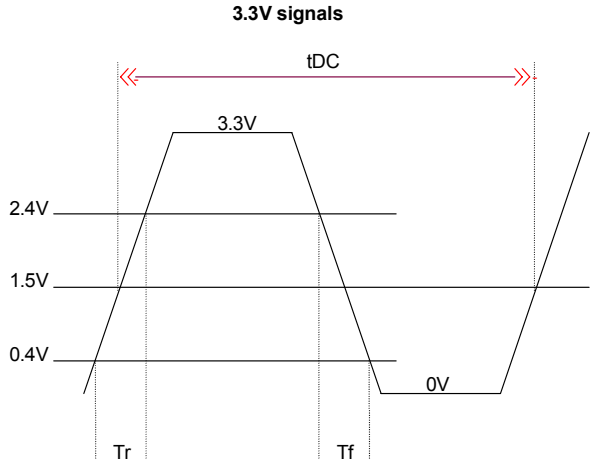

Figure 17. For Single-ended Output Signals

Ordering Information

Part Number	Package Type	Product Flow
CY28339ZC	48-pin TSSOP	Commercial, 0° to 70°C
CY28339ZCT	48-pin TSSOP – Tape and Reel	Commercial, 0° to 70°C
Lead Free		
CY28339ZXC	48-pin TSSOP	Commercial, 0° to 70°C
CY28339ZCXT	48-pin TSSOP – Tape and Reel	Commercial, 0° to 70°C

Package Drawing and Dimensions

48-lead (240-mil) TSSOP II Z4824

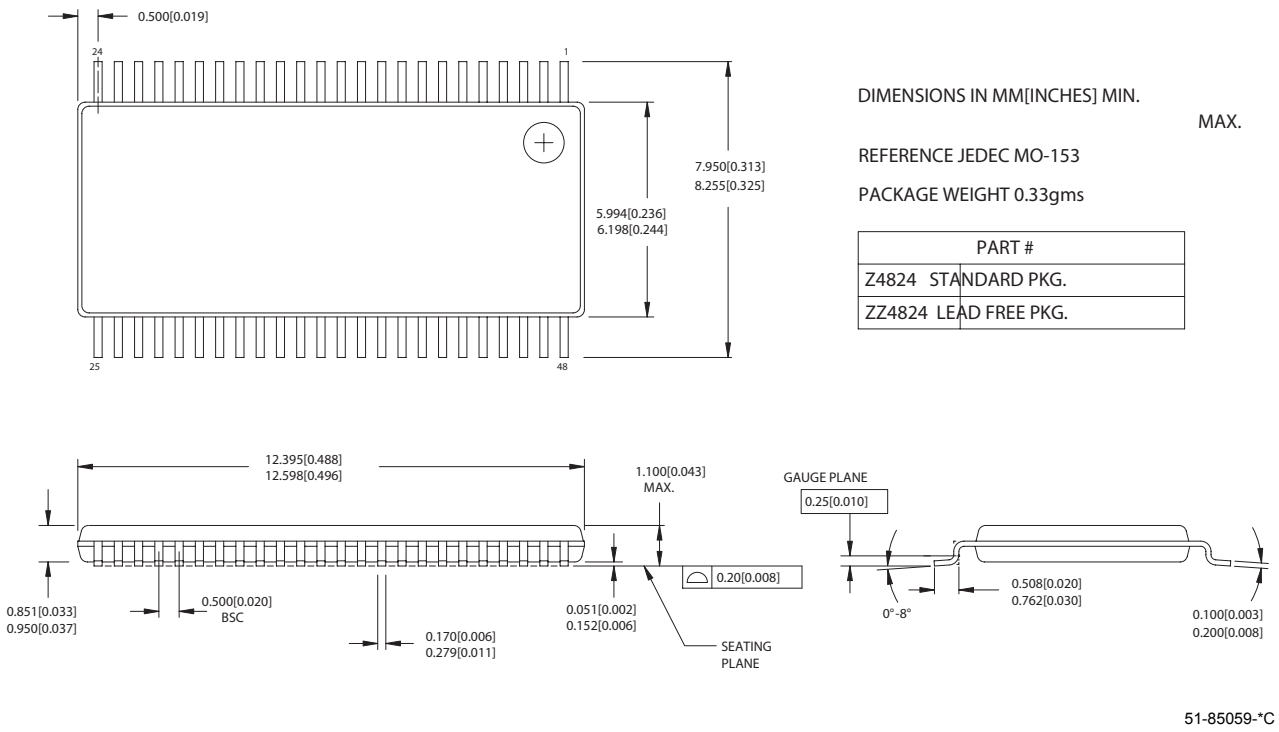

Intel is a registered trademark of Intel Corporation. Dial-a-Frequency and Dial-a-dB are trademarks of Cypress Semiconductor. All product and company names mentioned in this document may be the trademarks of their respective holders.

© Cypress Semiconductor Corporation, 2004. The information contained herein is subject to change without notice. Cypress Semiconductor Corporation assumes no responsibility for the use of any circuitry other than circuitry embodied in a Cypress product. Nor does it convey or imply any license under patent or other rights. Cypress products are not warranted nor intended to be used for medical, life support, life saving, critical control or safety applications, unless pursuant to an express written agreement with Cypress. Furthermore, Cypress does not authorize its products for use as critical components in life-support systems where a malfunction or failure may reasonably be expected to result in significant injury to the user. The inclusion of Cypress products in life-support systems application implies that the manufacturer assumes all risk of such use and in doing so indemnifies Cypress against all charges.

Document History Page

Document Title: CY28339 Intel® CK408 Mobile Clock Synthesizer Document Number: 38-07507				
REV.	**ECN NO.**	**Issue Date**	**Orig. of Change**	**Description of Change**
**	122362	12/13/02	RGL	New Data Sheet
*A	237868	See ECN	RGL	Added Lead Free Devices