CY27C256

32K x 8-Bit CMOS EPROM

Features

- **Wide speed range**
  - **— 45 ns to 200 ns (commercial and military)**
- **Low power**
  - **— 248 mW (commercial)**
  - **— 303 mW (military)**
- **Low standby power**
  - **— Less than 83 mW when deselected**
- **±10% Power supply tolerance**

Functional Description

The CY27C256 is a high-performance 32,768-word by 8-bit CMOS EPROM. When disabled ($\overline{CE}$ HIGH), the CY27C256 automatically powers down into a low-power stand-by mode. The CY27C256 is packaged in the industry standard 600-mil DIP, PLCC, and TSOP packages. The CY27C256 is also available in a CerDIP package equipped with an erasure window to provide for reprogrammability. When exposed to UV light, the EPROM is erased and can be reprogrammed. The memory cells utilize proven EPROM floating gate technology and byte-wide intelligent programming algorithms.

The CY27C256 offers the advantage of lower power and superior performance and programming yield. The EPROM cell requires only 12.5V for the super voltage, and low current requirements allow for gang programming. The EPROM cells allow each memory location to be tested 100% because each location is written into, erased, and repeatedly exercised prior to encapsulation. Each EPROM is also tested for AC performance to guarantee that after customer programming, the product will meet both DC and AC specification limits.

Reading the CY27C256 is accomplished by placing active LOW signals on $\overline{OE}$ and $\overline{CE}$. The contents of the memory location addressed by the address lines (A_0 - A_{14}) will become available on the output lines (O_0 - O_7).

Logic Block Diagram

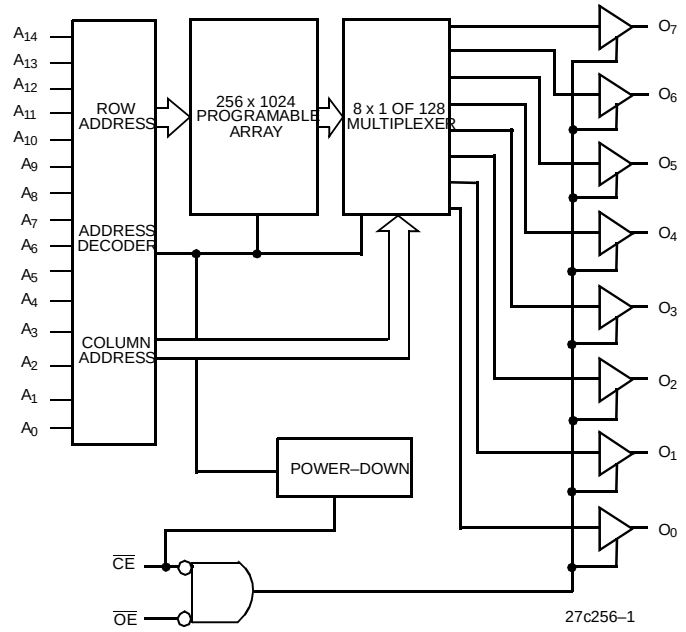

Pin Configurations

DIP/Flatpack

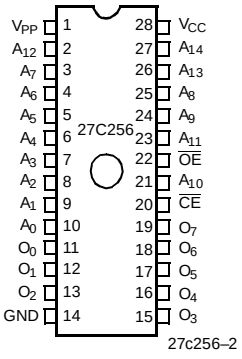

LCC/PLCC[1]

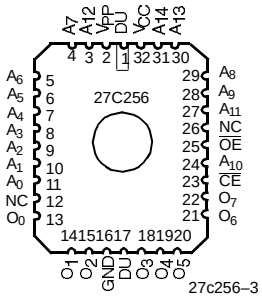

Note:

1. For PLCC only: Pins 1 and 17 are common and tied to the die attach pad. They must therefore be DU (don't use) for the PLCC package.

Selection Guide

		27C256-45	27C256-55	27C256-70	27C256-90	27C256-120	27C256-150	27C256-200
Maximum Access Time (ns)		45	55	70	90	120	150	200
Maximum Operating Current (mA)	Com'l	45	45	45	45	45	45	45
	Mil	55	55	55	55	55	55	55
Standby Current (mA)	Com'l	15	15	15	15	15	15	15
	Mil	20	20	20	20	20	20	20
Chip Select Time (ns)		45	55	70	90	120	150	200
Output Enable Time (ns)		15	20	25	30	30	40	40

Pin Configurations

28-Pin TSOP
Top View

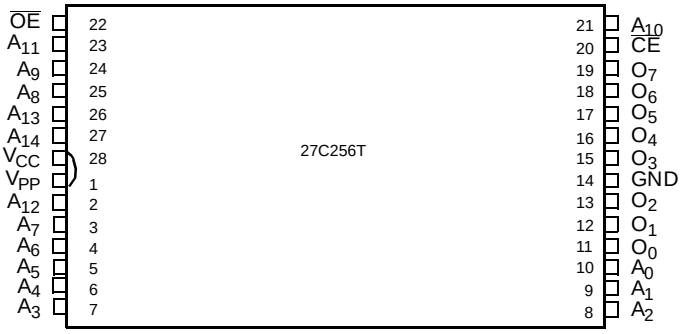

27c256–4

32-Pin TSOP
Top View

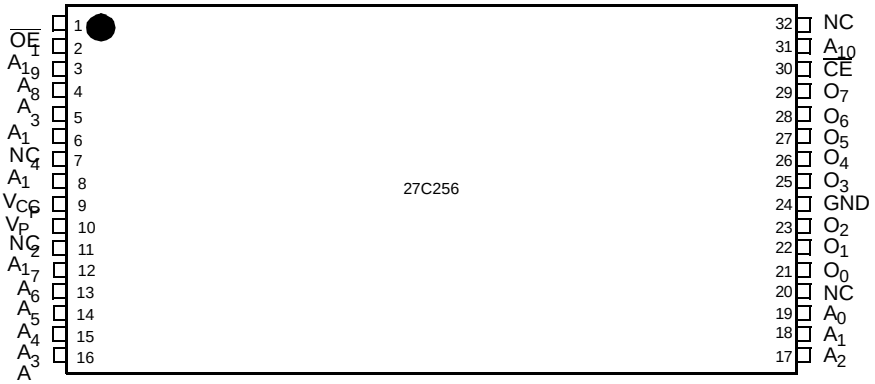

27c256–5

Maximum Ratings

(Above which the useful life may be impaired. For user guidelines, not tested.)

Storage Temperature ..... -65°C to +150°C

Ambient Temperature with Power Applied..... -55°C to +125°C

Supply Voltage to Ground Potential.....-0.5V to +7.0V

DC Voltage Applied to Outputs in High Z State..... -0.5V to +7.0V

DC Input Voltage .....-3.0V to +7.0V

DC Program Voltage 13.0V

Static Discharge Voltage ..... >2001V (per MIL-STD-883, Method 3015)

Latch-Up Current..... >200 mA

UV Exposure ..... 7258 Wsec/cm^2

Operating Range

Range	Ambient Temperature	V_{CC}
Commercial	0°C to +70°C	5V ±10%
Industrial[2]	-40°C to +85°C	5V ±10%
Military[3]	-55°C to +125°C	5V ±10%

Electrical Characteristics Over the Operating Range[4]

Parameter	Description	Test Conditions		27C256-45, 55, 70, 90, 120, 150, 200 Min.	Max.	Unit
V_{OH}	Output HIGH Voltage	V_{CC} = Min., I_{OH} = –4.0 mA		2.4		V
V_{OL}	Output LOW Voltage	V_{CC} = Min., I_{OL} = 16.0 mA[5]			0.4	V
V_{IH}	Input HIGH Level	Guaranteed Input Logical HIGH Voltage for All Inputs		2.0	V_{CC}	V
V_{IL}	Input LOW Level	Guaranteed Input Logical LOW Voltage for All Inputs		–0.3	0.8	V
I_{IX}	Input Current	GND ≤ V_{IN} ≤ V_{CC}		–10	+10	µA
I_{OZ}	Output Leakage Current	GND ≤ V_{OUT} ≤ V_{CC}, Output Disabled	Commercial	–10	+10	µA
			Military	–40	+40	
I_{OS}	Output Short Circuit Current[6]	V_{CC} = Max., V_{OUT} = GND		–20	–90	mA
I_{CC}	Power Supply Current	V_{CC} = Max., V_{IN} =V_{IH}, I_{OUT} = 0 mA, $\overline{CE}$=V_{IL}, $\overline{OE}$ = V_{IH}	Commercial		45	mA
			Military		55	
I_{SB}	Standby Supply Current	V_{CC} = Max., $\overline{CE}$ = V_{IH}	Commercial		15	mA
			Military		20	
V_{PP}	Programming Supply Voltage			12	13	V
I_{PP}	Programming Supply Current				50	mA
V_{IHP}	Input HIGH Programming Voltage			3.0		V
V_{ILP}	Input LOW Programming Voltage				0.4	V

Capacitance[7]

Parameter	Description	Test Conditions	Max.	Unit
C_{IN}	Input Capacitance	T_A = 25°C, f = 1 MHz, V_{CC} = 5.0V	10	pF
C_{OUT}	Output Capacitance		10	pF

Notes:

2. Contact a Cypress representative for information on industrial temperature range specifications.
3. T_A is the "instant on" case temperature.
4. See the last page of this specification for Group A subgroup testing information.
5. I_{OL}=12.0 mA for military devices.
6. For test purposes, not more than one output at a time should be shorted. Short circuit test duration should not exceed 30 seconds.
7. See Introduction to CMOS PROMs in this Data Book for general information on testing.

AC Test Loads and Waveforms

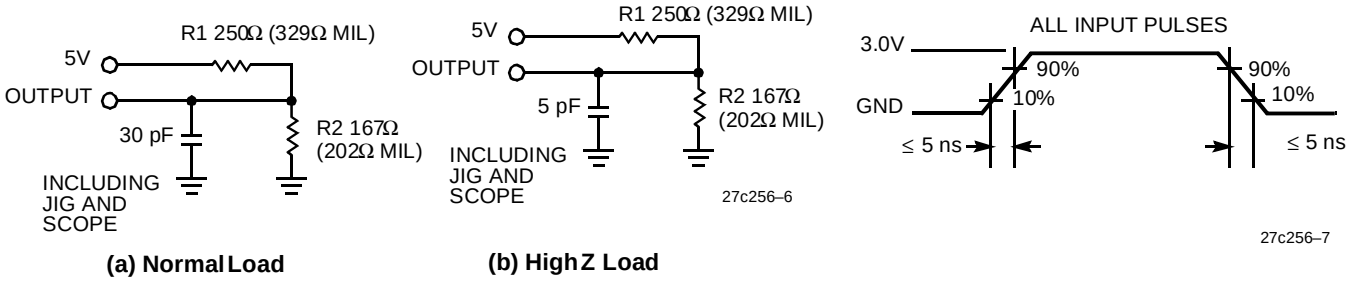

Equivalent to: THÉVENIN EQUIVALENT



Switching Characteristics Over the Operating Range[4,7]

Parameter	Description	27C256-45		27C256-*55*		27C256-70		27C256-90		Unit
		Min.	Max.	Min.	Max.	Min.	Max.	Min.	Max.	
t_{AA}	Address to Output Valid		45		55		70		90	ns
t_{HZOE}	Outpout Enable Inactive to High Z		15		20		25		25	ns
t_{OE}	Output Enable Active to Output Valid		15		20		25		30	ns
t_{HZCE}	Chip Enable Inactive to High Z		20		25		25		25	ns
t_{ACE}	Chip Enable Active to Output Valid		45		55		70		90	ns
t_{PU}	Chip Enable Active to Power Up	0		0		0		0		ns
t_{PD}	Chip Enable Inactive to Power Down		45		55		70		90	ns
t_{OH}	Output Hold from Address Change	0		0		0		0		ns

Switching Characteristics Over the Operating Range[4, 7]

Parameter	Description	27C256-120		27C256-150		27C256-200		Unit
		Min.	Max.	Min.	Max.	Min.	Max.	
t_{AA}	Address to Output Valid		120		150		200	ns
t_{HZOE}	Outpout Enable Inactive to High Z		30		30		30	ns
t_{OE}	Output Enable Active to Output Valid		30		40		40	ns
t_{HZCE}	Chip Enable Inactive to High Z		30		30		30	ns
t_{ACE}	Chip Enable Active to Output Valid		120		150		200	ns
t_{PU}	Chip Enable Active to Power Up	0		0		0		ns
t_{PD}	Chip Enable Inactive to Power Down		120		150		200	ns
t_{OH}	Output Hold from Address Change	0		0		0		ns

Switching Waveform

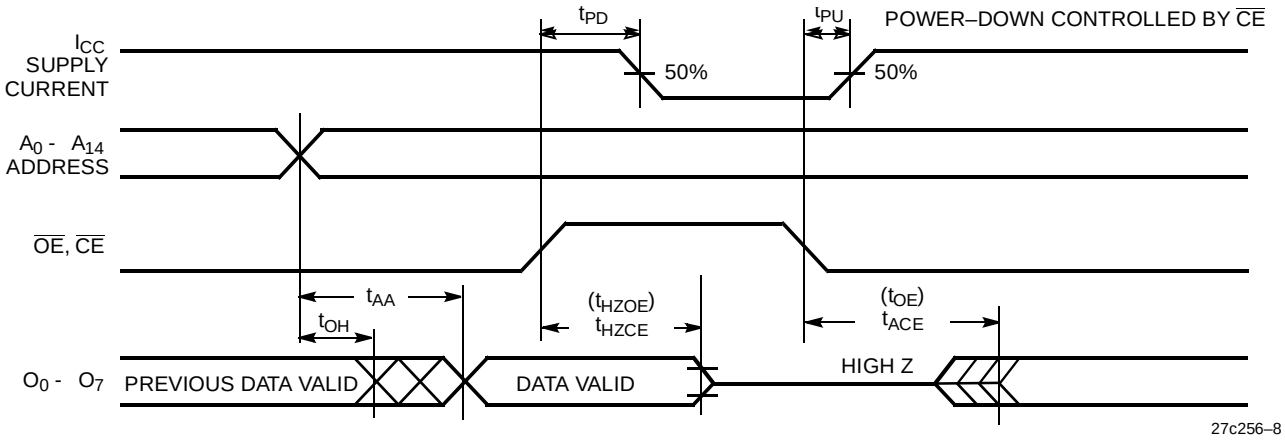

Erasure Characteristics

Wavelengths of light less than 4000 Å begin to erase the 27C256 in the windowed package. For this reason, an opaque label should be placed over the window if the EPROM is exposed to sunlight or fluorescent lighting for extended periods of time.

The recommended dose of ultraviolet light for erasure is a wavelength of 2537 Å for a minimum dose (UV intensity multiplied by exposure time) of 25 Wsec/cm2. For an ultraviolet lamp with a 12 mW/cm^2 power rating, the exposure time would be approximately 35 minutes. The CY27C256 needs to be within 1 inch of the lamp during erasure. Permanent damage may result if the EPROM is exposed to high-intensity UV light for an extended period of time. 7258 Wsec/cm^2 is the recommended maximum dosage.

Programming Modes

Programming support is available from Cypress as well as from a number of third-party software vendors. For detailed programming information, including a listing of software packages, please see the EPROM Programming Information located at the end of this section. Programming algorithms can be obtained from any Cypress representative.

Table 1. CY27C256 Mode Selection.

Mode	Pin Function[8]				
	A_{14}-A_0	$\overline{OE}$	$\overline{CE}$	V_{PP}	O_7-O_0
Read	A_{14}-A_0	V_{IL}	V_{IL}	X[9]	O_7-O_0
Output Disable	A_{14}-A_0	V_{IH}	V_{IL}	X	High Z
Power Down	A_{14}-A_0	X	V_{IH}	X	High Z

Notes:
8. X can be V_{IL} or V_{IH}
9. V_{PP} should not exceed V_{CC} in read mode.

Typical DC and AC Characteristics

NORMALIZED SUPPLY CURRENT vs. SUPPLY VOLTAGE

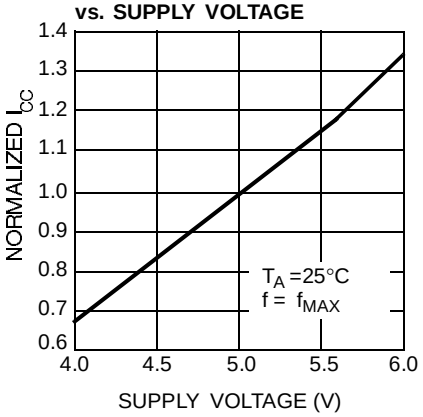

NORMALIZED SUPPLY CURRENT vs. AMBIENT TEMPERATURE

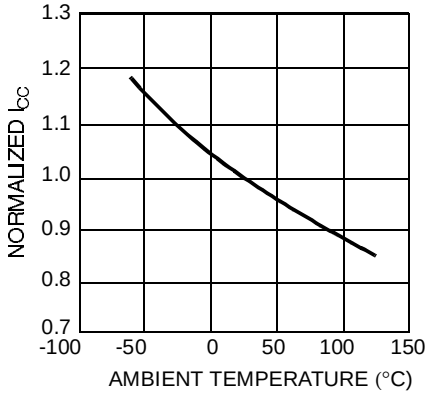

NORMALIZED ACCESS TIME vs. SUPPLY VOLTAGE

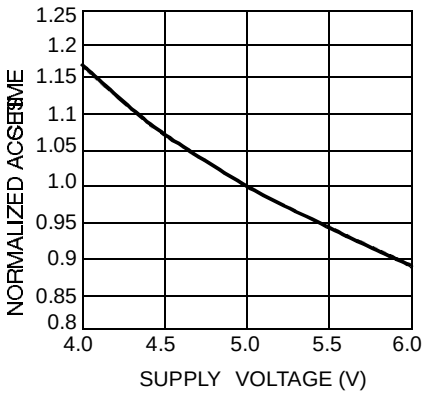

NORMALIZED ACCESSTIME vs. TEMPERATURE

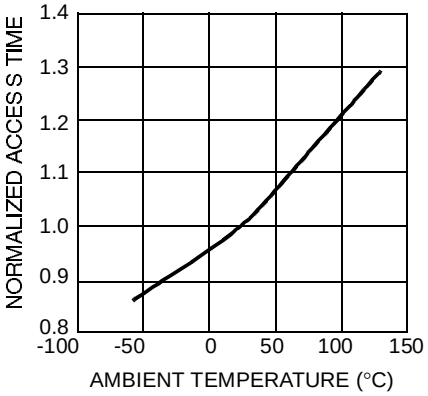

OUTPUT SOURCE CURRENT vs. OUTPUT VOLTAGE

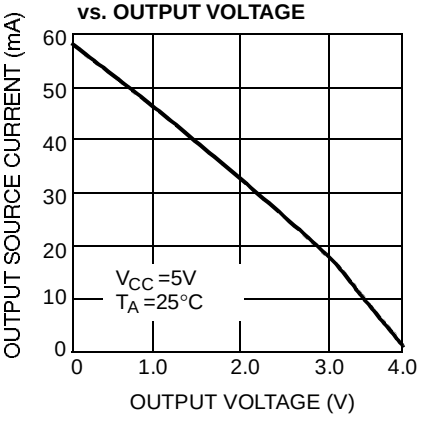

TYPICAL ACCESS TIME CHANGE vs. OUTPUT LOADING

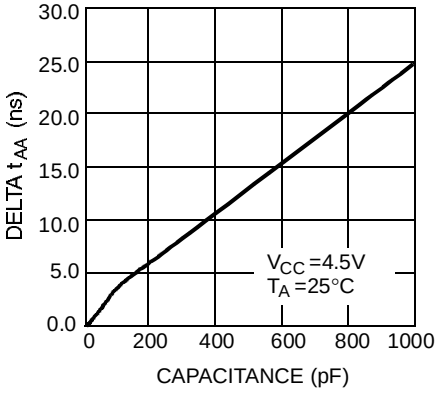

OUTPUT SINK CURRENT vs. OUTPUT VOLTAGE

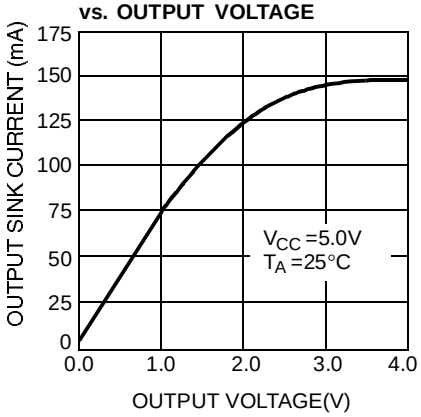

NORMALIZED SUPPLY CURRENT vs. ACCESS TIME

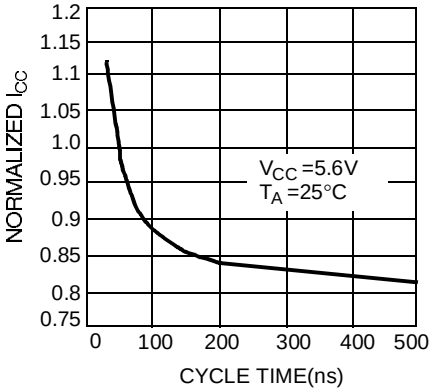

Ordering Information[10]

Speed (ns)	Ordering Code	Package Name	Package Type	Operating Range
45	CY27C256-45JC	J65	32-Pin Rectangular Plastic Leaded Chip Carrier	Commercial
	CY27C256-45PC	P15	28-Lead (600-Mil) Molded DIP	
	CY27C256-45WC	W16	28-Lead (600-Mil) Windowed CerDIP	
	CY27C256-45ZC	Z32	32-Lead Thin Small Outline Package	
	CY27C256-45WMB	W16	28-Lead (600-Mil) Windowed CerDIP	Military
55	CY27C256-55JC	J65	32-Pin Rectangular Plastic Leaded Chip Carrier	Commercial
	CY27C256-55PC	P15	28-Lead (600-Mil) Molded DIP	
	CY27C256-55WC	W16	28-Lead (600-Mil) Windowed CerDIP	
	CY27C256-55ZC	Z32	32-Lead Thin Small Outline Package	
	CY27C256-55WMB	W16	28-Lead (600-Mil) Windowed CerDIP	Military
70	CY27C256-70JC	J65	32-Pin Rectangular Plastic Leaded Chip Carrier	Commercial
	CY27C256-70PC	P15	28-Lead (600-Mil) Molded DIP	
	CY27C256-70WC	W16	28-Lead (600-Mil) Windowed CerDIP	
	CY27C256-70ZC	Z32	32-Lead Thin Small Outline Package	
	CY27C256-70WMB	W16	28-Lead (600-Mil) Windowed CerDIP	Military
90	CY27C256-90JC	J65	32-Pin Rectangular Plastic Leaded Chip Carrier	Commercial
	CY27C256-90PC	P15	28-Lead (600-Mil) Molded DIP	
	CY27C256-90WC	W16	28-Lead (600-Mil) Windowed CerDIP	
	CY27C256-90ZC	Z32	32-Lead Thin Small Outline Package	
	CY27C256-90WMB	W16	28-Lead (600-Mil) Windowed CerDIP	Military
120	CY27C256-120JC	J65	32-Pin Rectangular Plastic Leaded Chip Carrier	Commercial
	CY27C256-120PC	P15	28-Lead (600-Mil) Molded DIP	
	CY27C256-120WC	W16	28-Lead (600-Mil) Windowed CerDIP	
	CY27C256-120ZC	Z32	32-Lead Thin Small Outline Package	
	CY27C256-120WMB	W16	28-Lead (600-Mil) Windowed CerDIP	Military
150	CY27C256-150JC	J65	32-Pin Rectangular Plastic Leaded Chip Carrier	Commercial
	CY27C256-150PC	P15	28-Lead (600-Mil) Molded DIP	
	CY27C256-150WC	W16	28-Lead (600-Mil) Windowed CerDIP	
	CY27C256-150ZC	Z32	32-Lead Thin Small Outline Package	
	CY27C256-150WMB	W16	28-Lead (600-Mil) Windowed CerDIP	Military
200	CY27C256-200JC	J65	32-Pin Rectangular Plastic Leaded Chip Carrier	Commercial
	CY27C256-200PC	P15	28-Lead (600-Mil) Molded DIP	
	CY27C256-200WC	W16	28-Lead (600-Mil) Windowed CerDIP	
	CY27C256-200ZC	Z32	32-Lead Thin Small Outline Package	
	CY27C256-200WMB	W16	28-Lead (600-Mil) Windowed CerDIP	Military

Notes:

10. Most of these products are available in industrial temperature range. Contact a Cypress representative for specifications and product availability.

Ordering Information (continued)

Speed (ns)	Ordering Code	Package Name	Package Type	Operating Range
45	CY27C256T-45WC	W22	28-Lead (300-Mil) Windowed CerDIP	Commercial
	CY27C256T-45ZC	Z28	28-Thin Small Outline Package	
	CY27C256T-45WMB	W22	28-Lead (300-Mil) Windowed CerDIP	Military
55	CY27C256T-55WC	W22	28-Lead (300-Mil) Windowed CerDIP	Commercial
	CY27C256T-55ZC	Z28	28-Thin Small Outline Package	
	CY27C256T-55WMB	W22	28-Lead (300-Mil) Windowed CerDIP	Military
70	CY27C256T-70WC	W22	28-Lead (300-Mil) Windowed CerDIP	Commercial
	CY27C256T-70ZC	Z28	28-Thin Small Outline Package	
	CY27C256T-70WMB	W22	28-Lead (300-Mil) Windowed CerDIP	Military

MILITARY SPECIFICATIONS
Group A Subgroup Testing

DC Characteristics

Parameter	Subgroups
V_{OH}	1, 2, 3
V_{OL}	1, 2, 3
V_{IH}	1, 2, 3
V_{IL}	1, 2, 3
I_{IX}	1, 2, 3
I_{OZ}	1, 2, 3
I_{CC}	1, 2, 3
I_{SB}	1, 2, 3

Switching Characteristics

Parameter	Subgroups
t_{AA}	7, 8, 9, 10, 11
t_{OE}	7, 8, 9, 10, 11
t_{ACE}	7, 8, 9, 10, 11

Document #: 38-00245-D

Package Diagrams

32-Lead Plastic Leaded Chip Carrier J65

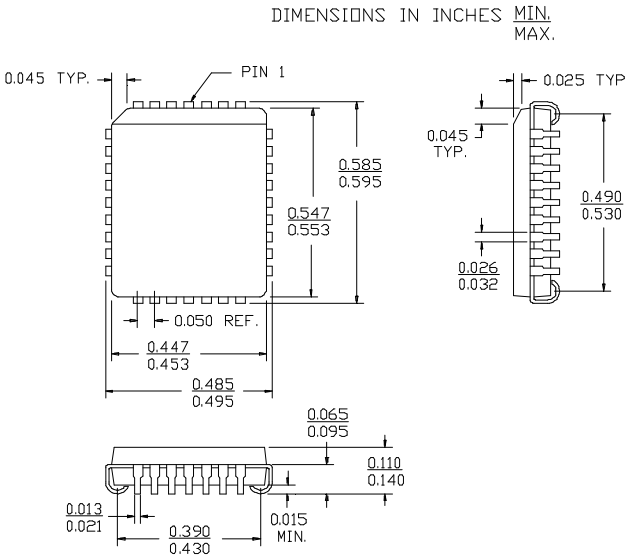

28-Lead (600-Mil) Molded DIP P15

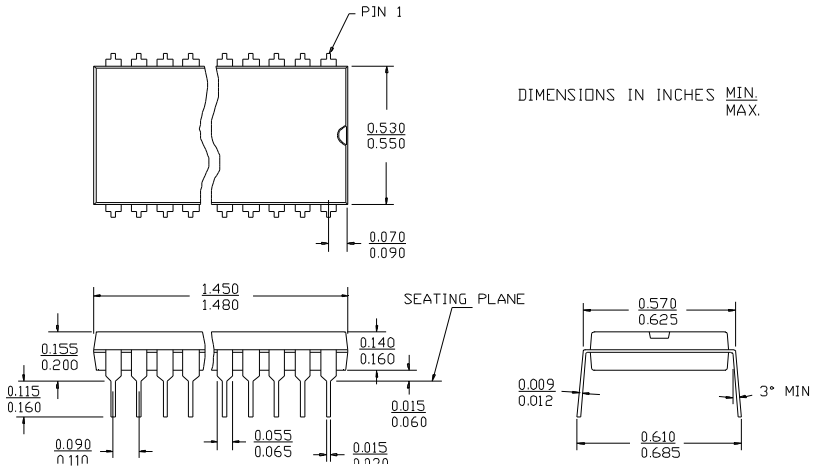

Package Diagrams (Continued)

28-Lead (600-Mil) Windowed CerDIP W16
MIL-STD-1835 D-10 Config.A

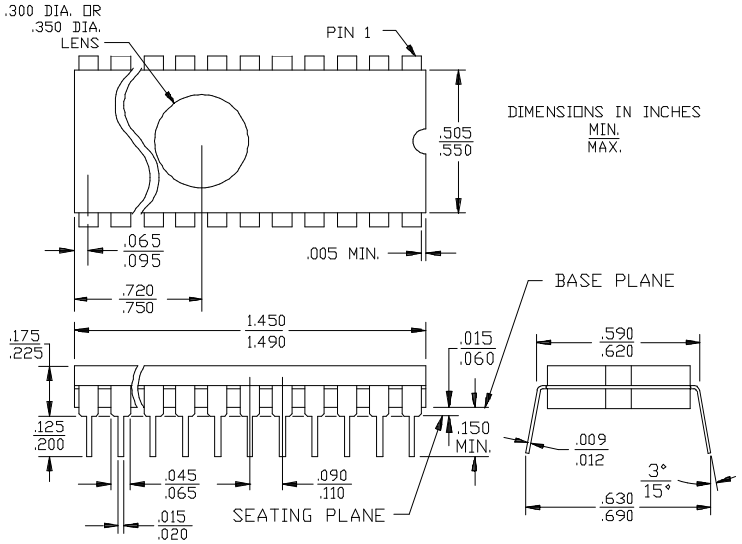

28-Lead Thin Small Outline Package Z28

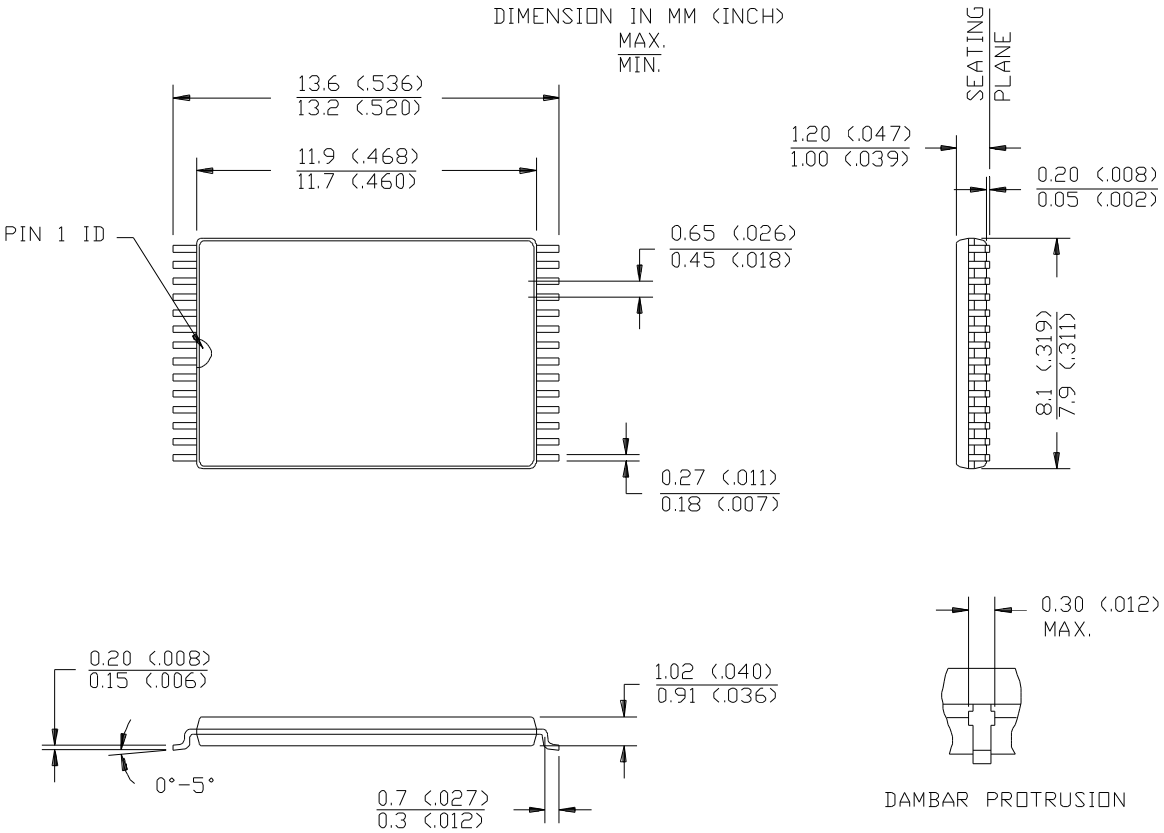

Package Diagrams (Continued)

32-Lead Thin Small Outline Package Z32

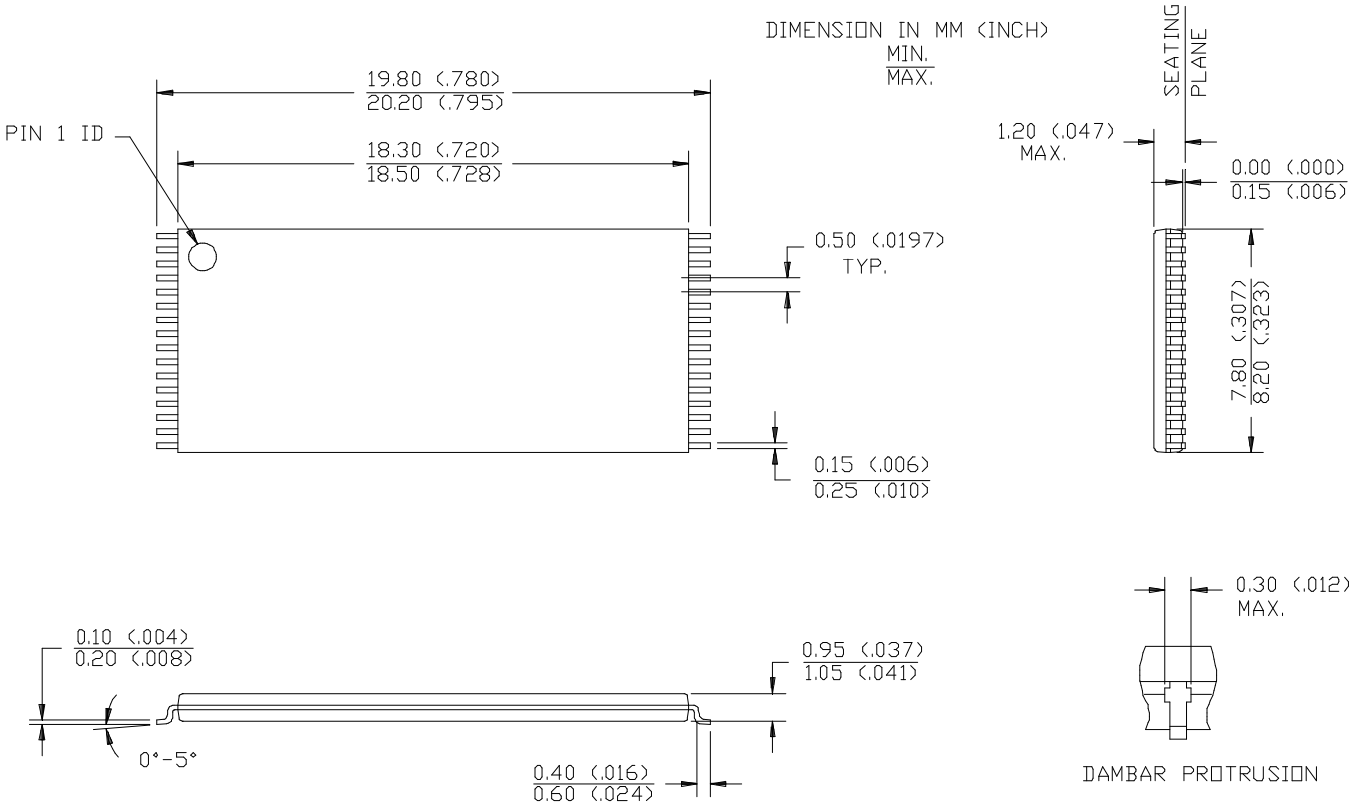

© Cypress Semiconductor Corporation, 1994. The information contained herein is subject to change without notice. Cypress Semiconductor Corporation assumes no responsibility for the use of any circuitry other than circuitry embodied in a Cypress Semiconductor product. Nor does it convey or imply any license under patent or other rights. Cypress Semiconductor does not authorize its products for use as critical components in life-support systems where a malfunction or failure may reasonably be expected to result in significant injury to the user. The inclusion of Cypress Semiconductor products in life-support systems application implies that the manufacturer assumes all risk of such use and in doing so indemnifies Cypress Semiconductor against all charges.