CXA-0320

Dimming/Connector Type

■ Features

- ●2-output
- ●Applicable panel size*: 5 to 6 inches
- ●With brightness control function (Pulse Wide Modulation mode).
- ●With a sensing function for running out of lamp (alarm output)
- ●In the high-voltage generator (a terminal and a pattern), an anti-dust measure by silicone application is taken.

(Notice) Applicable panel size becomes a standard.

■ Applications



CXA-0320 Specifications (Please refer to each specification before use)

Electrical Characteristics

Item	Unit	Symbol	Specification			Condition						
			min	typ	max	Vin(V)	Vrmt(V)	Vbr(V)	Rbr(kΩ)	Ta(℃)	RL(kΩ)	Remark
Output Current	mArms	Iout (Maximum dimmer)	4.5	5.0	5.5	12±1.2	5	0	-	-10 to +70	63	Voltage dimmer (*1)
			4.5	5.0	5.5	12±1.2	5	-	0	-10 to +70	63	Volume dimmer (*1)
		Iout (Minimum dimmer)	1.7	2.2	2.7	12±1.2	5	2.5	-	-10 to +70	63	Voltage dimmer (*1)
			1.7	2.2	2.7	12±1.2	5	-	50	-10 to +70	63	Volume dimmer (*1)
Input Current	A	Iin1	-	0.40	0.75	12±1.2	5	0		-10 to +70	63	Remote ON
	mA	Iin2	-		1	12±1.2	0			-10 to +70	63	Remote OFF
Frequency	kHz	Freq1	39	43	47	12±1.2	5	0		-10 to +70	63	
	Hz	Freq2 (Duty frequency)	300	330	360	12±1.2	5	2.5	50	-10 to +70	63	
Open Circuit Voltage	Vrms	Vopen	1200	1250	1500	10.8min.	5	0		-10 to +70	∞	Open load
Alarm Signal	V	Vst	4.5	5.0	5.5	12±1.2	5	0		-10 to +70	∞	In case of lamp anomaly (*2)
			-	0	0.5	12±1.2	5	0		-10 to +70	63	On a normal operation (*2)

(*1) Please refer to the connection diagram for details of a dimming method.
(*2) Please refer to the connection diagram for details of alarm output.

Other Specifications

Dimming Function		Yes
Operating Temperature	℃	-10 to +70
Storage Temperature	℃	-30 to +85
Operating Humidity Ratio	RH%	95Max
Safety Standard		—
Weight	g	20
Dimensions(WxDxH)	mm	103x30x8 (*3)
Fused Input		Yes
Remote ON ／ OFF		Yes
Alarm Signal Function		Yes
Shutdown Function		No
Silicone Coating on High Voltage Area		Yes

(*3) These dimensions are indicated the maximum only H. Others are typical values.

■Conformity to RoHs Directive

This means that, in conformity with EU Directive 2002/95/EC, lead, cadmium, mercury, hexavalent chromium, and specific bromine-based flame retardants, PBB and PBDE, have not been used, except for exempted applications.

Outline Drawing

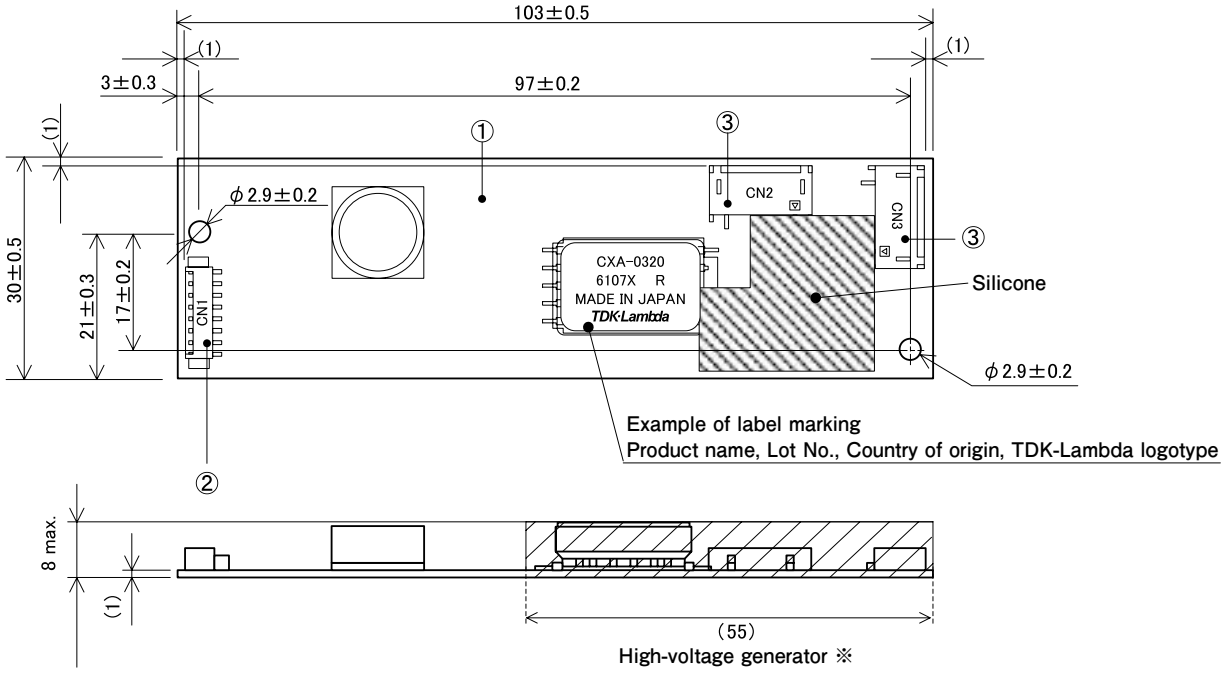

※From high-voltage generator, please secure space distance more than 3mm in top and bottom right and left.

unit:mm

Connector

Connector number	Part number	Model/Material	Quantity	Remarks	Recommended applicable connector
①	Printed circuit board PCB	Composite (CEM-3)	1	UL94V-0 t=1.0	—
②	Input connector CN1	53261-0871	1	Molex Inc.	51021-0800
③	Output connector CN2,CN3	SM02 (8.0) B-BHS-1-TB (LF) (SN)	2	JST Mfg. Co., Ltd.	BHR-03VS-1

Terminal Numbers And Functions

Input side CN1

Terminal number	Symbol	Rated voltage	Remarks
CN1-1	Vin	12±1.2V	Power input
CN1-2			
CN1-3	GND	0V	Ground
CN1-4			
CN1-5	Vrmt	0V/2.5V to Vin	Remote terminal 0 to 0.4V : OFF 2.5 to Vin : ON
CN1-6	Vbr1/Rbr1	0 to 2.5V/0 to 50kΩ	Dimmer terminal1
CN1-7	Vbr2/Rbr2	GND/0 to 50kΩ	Dimmer terminal2
CN1-8	Vst (Output)	0V/5V	Alarm output Lump open : 5V

Output side CN2

Terminal number	Symbol	Rated voltage	Remarks
CN2-1	$V_{HIGH}1$	340Vrms	Output 1
CN2-2	N.C.	—	—
CN2-3	$V_{LOW}1$	(2V)	Output 1 return

Output side CN3

Terminal anumber	Symbol	Rated voltage	Remarks
CN3-1	$V_{HIGH}2$	340Vrms	Output 2
CN3-2	N.C.	—	—
CN3-3	$V_{LOW}2$	(2V)	Output 2 return

Connections

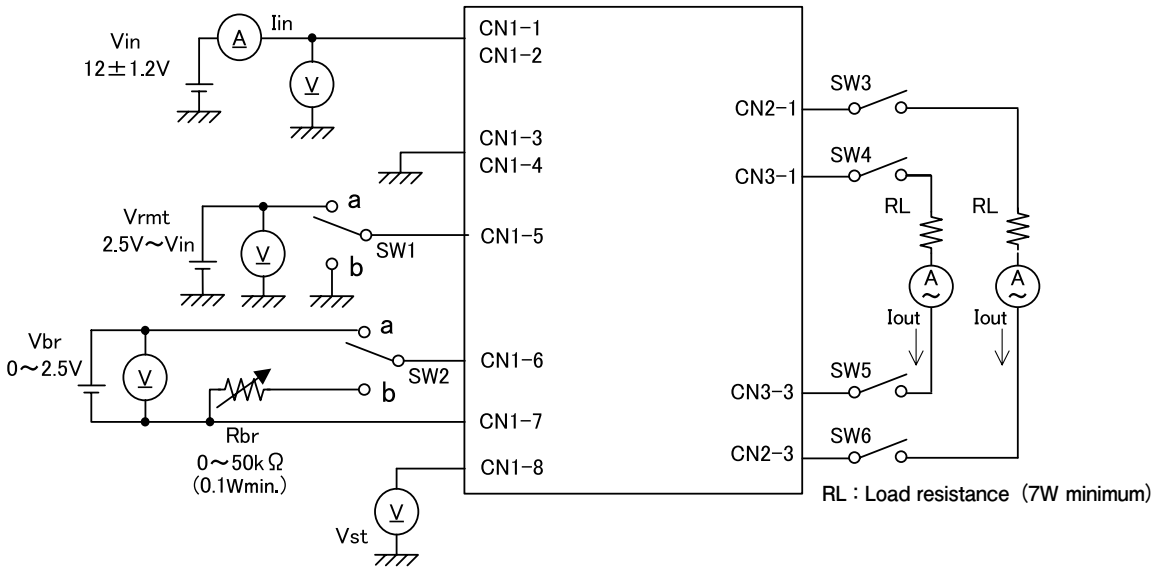

Operate by ON-OFF of SW1 as follows.

SW1	Unit operation
a	Operation
b	Does not operate
OPEN	Does not operate

Operate by ON-OFF of SW2 as follows.

SW2	Unit operation
a	Voltage dimmer Vbr=0 to 2.5V
b	Volume dimmer VR=0 to 50kΩ

※ Vbr=0V:Maximum brightness
Rbr=0Ω:Maximum brightness

Protection circuit operation

Load condition	※ Alarm output (CN1-8)
Normal condition	0.5V max.
When 1 load (lamp) is run-out	5±0.5V
When 2 loads (lamps) are run-out	5±0.5V

※ When more than one of SW3- SW6 in the connection diagram was opened, output alarm signal of 5V.