# Toroidal Inductors — Medium Current — CTP4407

CTP4407 is a medium current inductor with the following data and features:

- **Core type:** 0.68" o.d., Iron Powder, perm 75.
- **Power rating:** 0.86 watts for temp. rise 50˚C.
- **Typical applications:** Input and output filters in Switch Mode Power Supplies.

**Four mounting styles are offered:**

**1** Flying leads (1.00"), for vertical or horizontal mounting.
**2** 4-pin header, for vertical mounting.
**3** Threaded center hole, flying leads (2.00").
**4** 2-pin header, for vertical mounting.



## MECHANICAL

**Style 1**

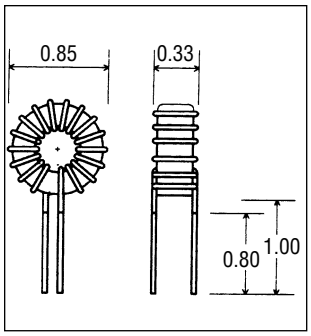


**Style 2**

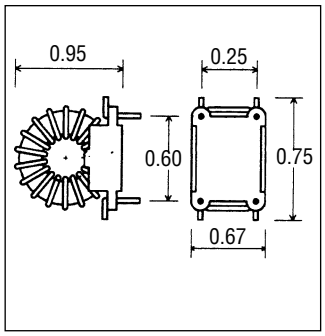


**Style 3**

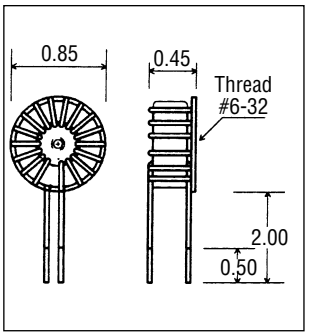


**Style 4**

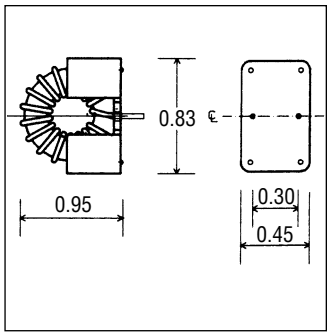


## ELECTRICAL SPECIFICATION

**Ordering Information:** Substitute the style number for the asterisk (*). Example: CTP4407, Style 1, 56uH. Order: CTP4407 - 116

| Part No. CTP4407 - | Inductance (uH) | DCR Ohms | Rated Current Amp. RMS | I (amp.) @ Lsat. 10% | I (amp.) @ Lsat. 25% | I (amp.) @ Lsat. 50% |
|---|---|---|---|---|---|---|
| * 01 | 3.3 | 0.006 | 12.2 | 5.7 | 11.4 | 22.9 |
| * 02 | 3.9 | 0.006 | 11.8 | 5.3 | 10.5 | 21.0 |
| * 03 | 4.7 | 0.007 | 11.3 | 4.8 | 9.6 | 19.2 |
| * 04 | 5.6 | 0.007 | 10.8 | 4.4 | 8.8 | 17.5 |
| * 05 | 6.8 | 0.008 | 10.3 | 4.0 | 8.0 | 15.9 |
| * 06 | 8.2 | 0.009 | 9.9 | 3.6 | 7.2 | 14.5 |
| * 07 | 10 | 0.010 | 9.4 | 3.3 | 6.6 | 13.1 |
| * 08 | 12 | 0.011 | 9.0 | 3.0 | 6.0 | 12.0 |
| * 09 | 15 | 0.012 | 8.6 | 2.7 | 5.4 | 10.7 |
| * 10 | 18 | 0.013 | 8.2 | 2.4 | 4.9 | 9.8 |
| * 11 | 22 | 0.014 | 7.8 | 2.2 | 4.4 | 8.9 |
| * 12 | 27 | 0.016 | 7.4 | 2.0 | 4.0 | 8.0 |
| * 13 | 33 | 0.017 | 7.1 | 1.8 | 3.6 | 7.2 |
| * 14 | 39 | 0.019 | 6.8 | 1.7 | 3.3 | 6.6 |
| * 15 | 47 | 0.026 | 5.8 | 1.5 | 3.0 | 6.1 |
| * 16 | 56 | 0.028 | 5.5 | 1.4 | 2.8 | 5.5 |
| * 17 | 68 | 0.039 | 4.7 | 1.3 | 2.5 | 5.0 |
| * 18 | 82 | 0.054 | 4.0 | 1.1 | 2.3 | 4.6 |
| * 19 | 100 | 0.075 | 3.4 | 1.0 | 2.1 | 4.2 |
| * 20 | 120 | 0.104 | 2.9 | 0.9 | 1.9 | 3.8 |
| * 21 | 150 | 0.147 | 2.4 | 0.8 | 1.7 | 3.4 |
| * 22 | 180 | 0.161 | 2.3 | 0.8 | 1.5 | 3.1 |
| * 23 | 220 | 0.222 | 2.0 | 0.7 | 1.4 | 2.8 |
| * 24 | 270 | 0.312 | 1.7 | 0.6 | 1.3 | 2.5 |



FILTRAN LTD
An ISO 9001 Registered Company
229 Colonnade Road, Nepean, Ontario, Canada K2E 7K3
Tel: (613) 226-1626 Fax: (613) 226-7124 www.filtran.com