CTLFPP1GF Series

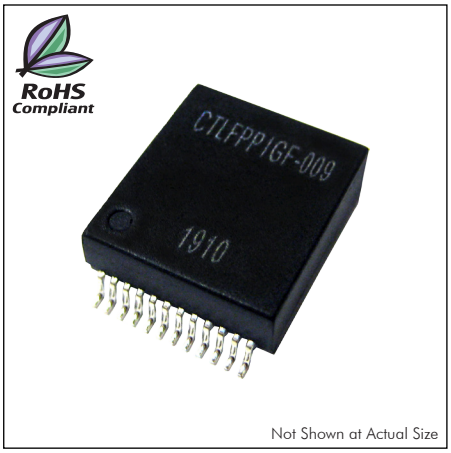

CHARACTERISTICS

Description: 100/1000 Base-Tx, PoE & PoE+, SMD
Features:

- IEEE 802.3af&at/ANSI X3.263 compliant performance
- Suibtable for End-span and Mid-span PoE applications
- 350&600mA current capability
- Designed for IP phone or switch applications
- Compact footprint
- Designed to withstand IR reflow temperatures up to 240°C

Part Number	Ports	Insertion Loss (dB Max.)	Return Loss (dB Min. @ 100Ω)				Differential to Common Mode Rejection (dB Min.)			Crosstalk (dB Min.)			Hipot (Vrms Min)	PoE Current	Operating Temperature
		1-100 MHz	1-30 MHz	40 MHz	50 MHz	60-80 MHz	30 MHz	60 MHz	100 MHz	30 MHz	60 MHz	100 MHz	@60Hz		
CTLFPP1GF-001	4	-1.2	-16	-14	-13	-12	-43	-37	-33	-45	-40	-35	1500	350mA	0°C to 70°C
CTLFPP1GF-002	1	-1.2	-18	-14	-13	-12	-	-	-	-41	-37	-33	1500	750mA	-40°C to 85°C
CTLFPP1GF-003	2	-1.2	-16	-14	-13	-12	-43	-37	-30	-35	-30	-25	1500	600mA	-40°C to 85°C
CTLFPP1GF-004	2	-1.0	-18	-14.4	-13.1	-12	-43	-37	-33	-45	-40	-35	1800	350mA	0°C to 70°C
CTLFPP1GF-008	1	-1.2	-16	-14	-13	-12	-43	-37	-33	-43	-37	-31	1500	350mA	-40°C to 85°C
CTLFPP1GF-009	2	-1.0	-18	-18	-16	-12	-43	-37	-33	-43	-37	-33	1500	600mA	-40°C to 85°C

PHYSICAL DIMENSIONS & PAD LAYOUT

CTLFPP1GF-001/-003

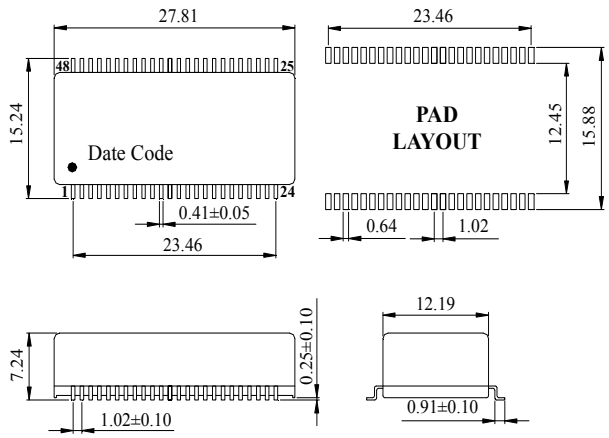

CTLFPP1GF-002

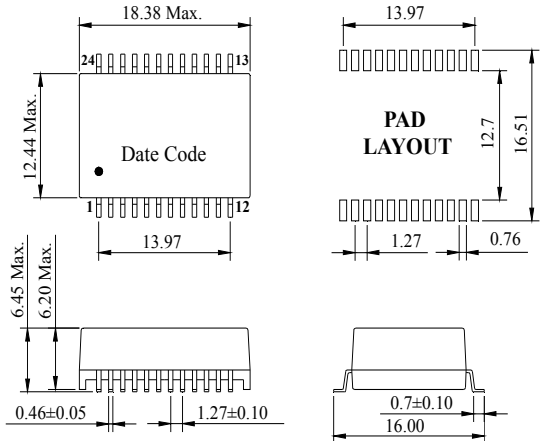

Unit: mm Unless otherwise specified, all tolerances are ±0.25

Copyright © 2019 by CT Magnetics, DBA Central Technologies. All rights reserved.
CT Magnetics reserves the right to make improvements or change specifications without notice

CTLFPP1GF

PHYSICAL DIMENSIONS & PAD LAYOUT

CTLFPP1GF-004

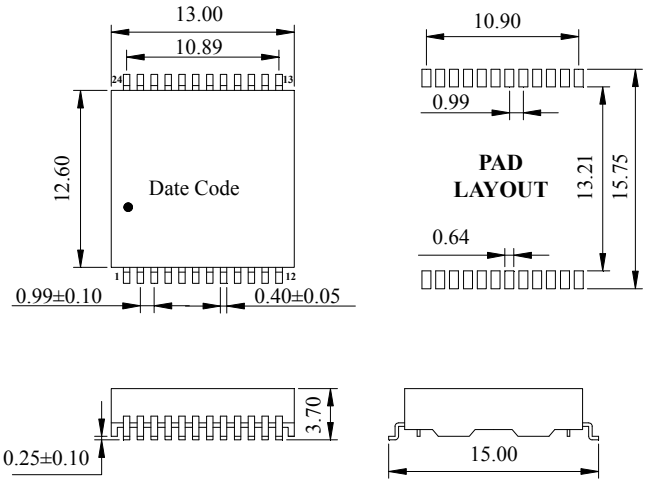

CTLFPP1GF-008

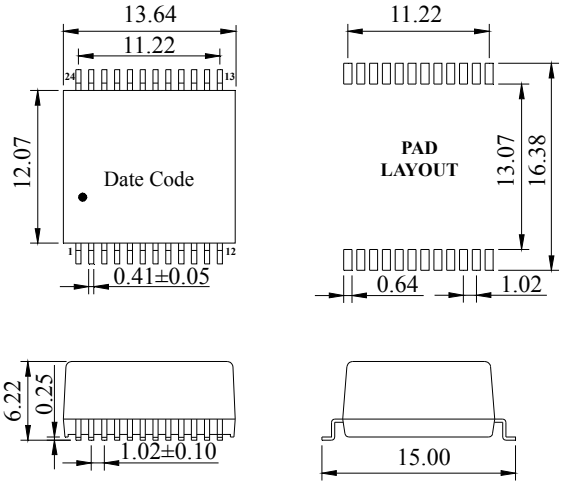

CTLFPP1GF-009

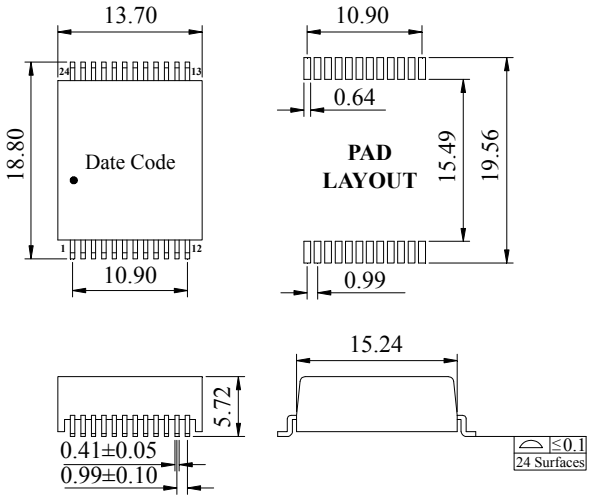

Unit: mm Unless otherwise specified, all tolerances are ±0.25

Copyright © 2019 by CT Magnetics, DBA Central Technologies. All rights reserved.
CT Magnetics reserves the right to make improvements or change specifications without notice

CTLFPP1GF

SCHEMATICS

CTLFPP1GF-001

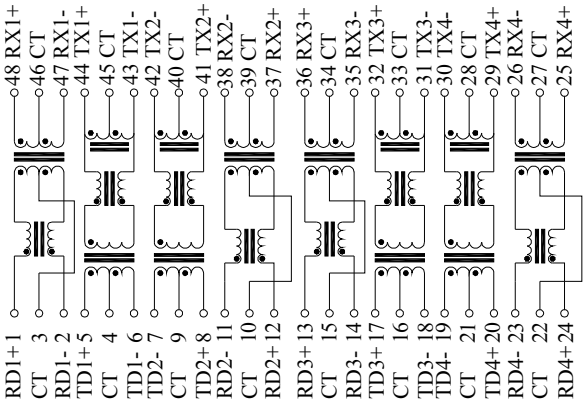

CTLFPP1GF-002

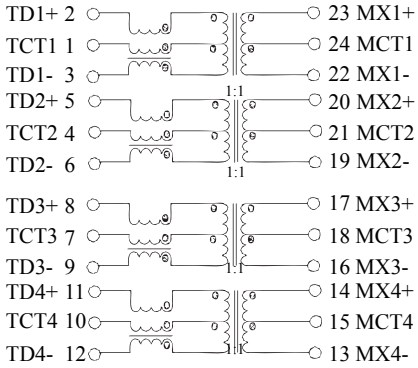

CTLFPP1GF-003

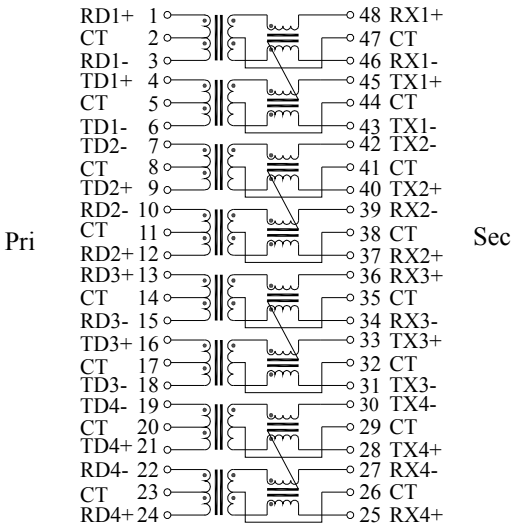

CTLFPP1GF-004

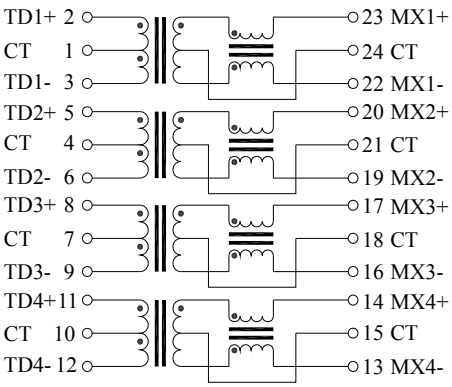

CTLFPP1GF-008

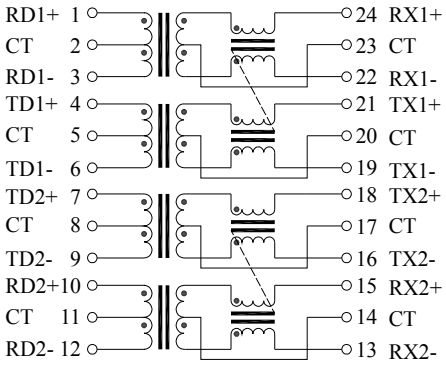

CTLFPP1GF-009

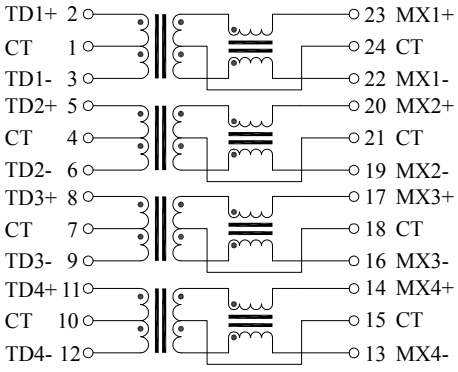

Copyright © 2019 by CT Magnetics, DBA Central Technologies. All rights reserved.
CT Magnetics reserves the right to make improvements or change specifications without notice