# CTHF2836 Series

## From 1.8 mH to 35 mH

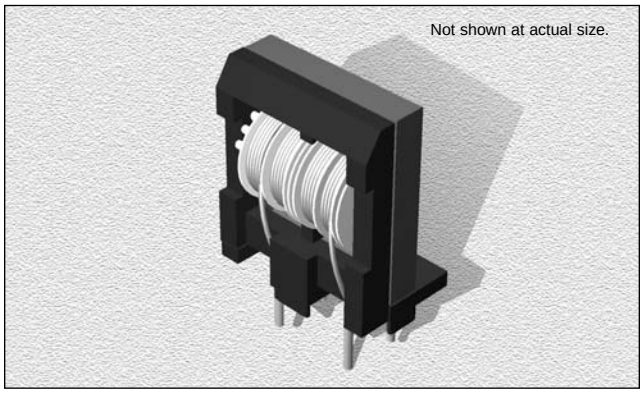


### CHARACTERISTICS

**Description:** Common mode choke coils.
**Applications:** For AC power supply/compact, separable bobbin.
**Rated Voltage:** 250Vac
**Operating Temperature:** -20°C to +105°C (including self temperature rise).
**Temperature Rise:** 45°C maximum each line.
**Dielectric Withstanding Voltage:** 2000Vac between each winding for 1 minute.
**Insulation Resistance:** 100MΩ minimum between each winding for 1 minute.
**Additional Information:** Additional electrical & physical information available upon request. Different inductance and current products are available as well.
**Samples available. See website for ordering information.**

### SPECIFICATIONS

* Indicates the inductance difference between the coil L1 and L2.

| Part Number | Inductance (Min.) (mH) | Inductance Difference* (µH Max.) | DCR Max. (Ω) | Rated Iac Current (Max.) (A) |
|---|---|---|---|---|
| CTHF2836-353M1R0 | 35 | 650 | 0.78 | 1.0 |
| CTHF2836-253M1R2 | 25 | 500 | 0.56 | 1.2 |
| CTHF2836-203M1R5 | 20 | 400 | 0.41 | 1.5 |
| CTHF2836-123M1R8 | 12 | 300 | 0.27 | 1.8 |
| CTHF2836-802M2R0 | 8.0 | 200 | 0.18 | 2.0 |
| CTHF2836-562M2R5 | 5.6 | 150 | 0.13 | 2.5 |
| CTHF2836-472M2R8 | 4.7 | 150 | 0.10 | 2.8 |
| CTHF2836-332M3R0 | 3.3 | 100 | 0.088 | 3.0 |
| CTHF2836-182M4R0 | 1.8 | 40 | 0.05 | 4.0 |

### PHYSICAL DIMENSIONS

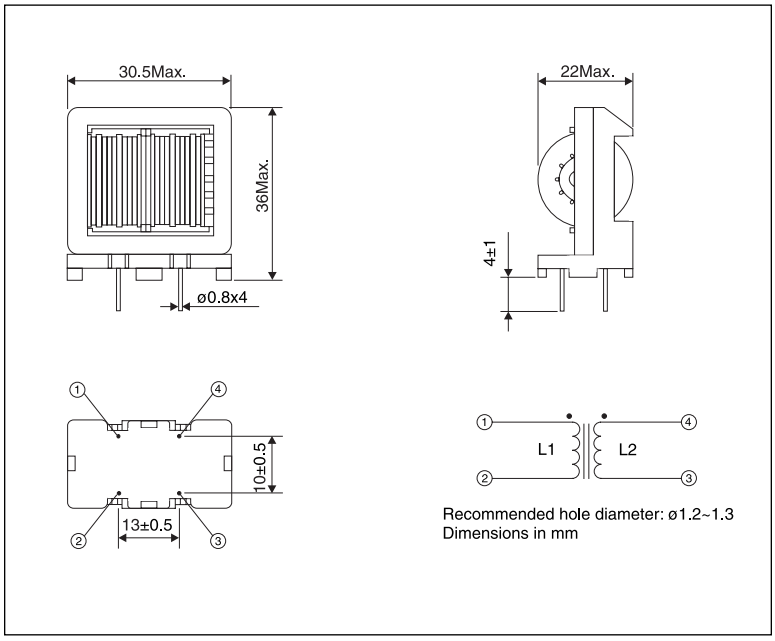




CENTRAL Technologies
Manufacturer of Inductors, Chokes, Coils, Beads, Transformers & Toroids
**800-684-5322** Inside US **949-453-1811** Outside US
Copyright © 2005 by CT Magnetics, DBA Central Technologies. All rights reserved.
CT Magnetics reserves the right to make improvements or change specifications without notice