CTCDRH3D16F Series

From 1.5 µH to 100 µH

ENGINEERING KIT #43F



CHARACTERISTICS

Description: SMD (shielded) power inductor.
Applications: Power supplies for VTR, OA equipment, LCD televisions, PC notebooks, portable communication equipment, DC/DC converters, etc.
Operating Temperature: -30°C to +100°C
Inductance Tolerance: ±30%
Rated Current: The rated current indicates the current when the inductance decreases to 65% over its nominal value or D.C. current when the temperature rising ΔT=40°C lower, whichever is lower.
Testing: Tested on a HP4285A at 100KHz.
Packaging: Tape & Reel.
Marking: Parts are marked with inductance code.
Miscellaneous: RoHS Compliant.
Additional Information: Additional electrical & physical information available upon request.
Samples available. See website for ordering information.

SPECIFICATIONS

Parts are available in ±30% tolerance only.

Part Number	Inductance @ 0.25Vrms,0Adc (µH ±30%)	L Test Freq. (KHz)	DCR Max. (Ω)	Rated DC Current (A)
CTCDRH3D16F-1R5N	1.5	100	.052	1.55
CTCDRH3D16F-2R2N	2.2	100	.072	1.20
CTCDRH3D16F-3R3N	3.3	100	.085	1.10
CTCDRH3D16F-4R7N	4.7	100	.105	0.90
CTCDRH3D16F-6R8N	6.8	100	.170	0.73
CTCDRH3D16F-100N	10	100	.210	0.55
CTCDRH3D16F-150N	15	100	.295	0.45
CTCDRH3D16F-220N	22	100	.430	0.40
CTCDRH3D16F-330N	33	100	.675	0.32
CTCDRH3D16F-470N	47	100	.940	0.22
CTCDRH3D16F-680N	68	100	1.28	0.20
CTCDRH3D16F-820N	82	100	1.55	0.17
CTCDRH3D16F-101N	100	100	1.75	0.15

PHYSICAL DIMENSIONS

Size	A Max.	B Max.	C Max.	D	E	F
mm	4.1	4.1	1.8	1.15	5.2	2.95
inches	0.16	0.16	0.07	0.05	0.20	0.12

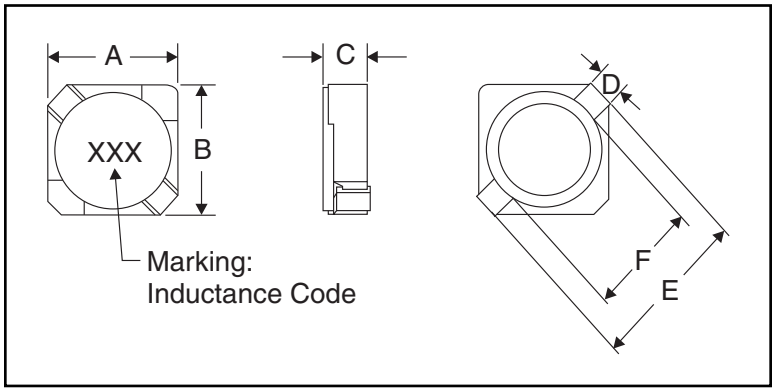

PAD LAYOUT

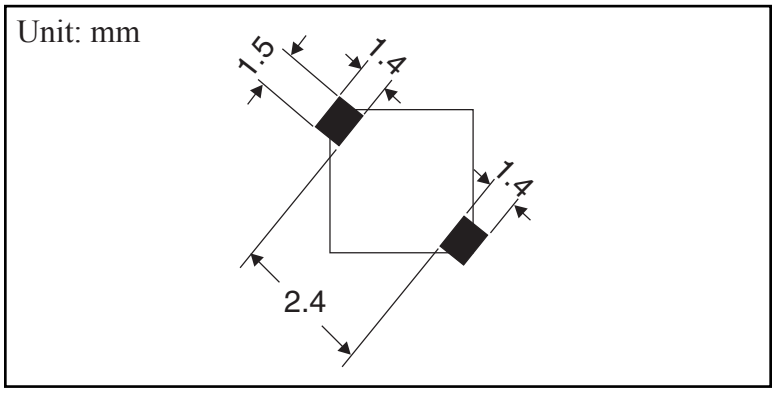

Copyright © 2012 by CT Magnetics, DBA Central Technologies. All rights reserved.
CT Magnetics reserves the right to make improvements or change specifications without notice