CTA4

CIT RELAY & SWITCH
A Division of Circuit Interruption Technology, Inc.

Distributor: Electro-Stock www.electrostock.com Tel: 630-682-1542 Fax: 630-682-1562

FEATURES:

- Low coil power consumption
- Small size and light weight
- Switching current up to 20A
- Suitable for household appliances, automotive applications
- Dual relay available





16.9 x 14.5 (29.7) x 19.5 mm

CONTACT DATA

Contact Arrangement	1A & 1U = SPST N.O. 1C & 1W = SPDT	2A & 2U = (2) SPST N.O. 2C & 2W = (2) SPDT
Contact Ratings	1A, 1C, 2A, & 2C: 10A @ 120VAC, 28VDC; 20A @ 14VDC 1U, 1W, 2U, & 2W: 2x10A @ 120VAC, 28VDC; 2x20A @ 14VDC	
Contact Resistance	< 30 milliohms initial	
Contact Material	$AgSnO_2$	
Maximum Switching Power	1A & 1C = 280W; 1U & 1W = 2x280W	
Maximum Switching Voltage	380VAC, 75VDC	
Maximum Switching Current	20A	

COIL DATA

Coil Voltage VDC		Coil Resistance Ω ± 10%	Pick Up Voltage VDC (max) 75% of rated voltage	Release Voltage VDC (min) 10% of rated voltage	Coil Power W	Operate Time ms	Release Time ms
Rated	Max.						
3	3.9	9	2.25	0.3	1.0	10	5
5	6.5	25	3.75	0.5			
6	7.8	36	4.50	0.6			
9	11.7	85	6.75	0.9			
12	15.6	145	9.00	1.2			
18	23.4	342	13.50	1.8			
24	31.2	576	18.00	2.4			

CAUTION:

1. The use of any coil voltage less than the rated coil voltage may compromise the operation of the relay.
2. Pickup and release voltages are for test purposes only and are not to be used as design criteria.

GENERAL DATA

Electrical Life @ rated load Mechanical Life	100K cycles, typical 10M cycles, typical
Insulation Resistance	100MΩ min @ 500VDC
Dielectric Strength, Coil to Contact Contact to Contact	1500V rms min. @ sea level 750V rms min. @ sea level
Shock Resistance	$100m/s^2$ for 11ms
Vibration Resistance	1.27mm double amplitude 10-40Hz
Terminal (Copper Alloy) Strength	10N
Operating Temperature Storage Temperature	-40 °C to + 85 °C -40 °C to + 155 °C
Solderability	230 °C ± 2 °C for 10 ± 0.5s
Weight	12g & 24g

CIT RELAY & SWITCH
A Division of Circuit Interruption Technology, Inc.

CTA4

Distributor: Electro-Stock www.electrostock.com Tel: 630-682-1542 Fax: 630-682-1562

ORDERING INFORMATION

1. Series:	CTA4	1C	S	12VDC
CTA4				
2.Contact Arrangement:				
1A = SPST N.O.				
1C = SPDT				
1U = SPST N.O.				
1W = SPDT				
2A = (2) SPST N.O.				
2C = (2) SPDT				
2U = (2) SPST N.O.				
2W = (2) SPDT				
3. Sealing Options:				
S = Sealed				
C = Dust Cover				
4. Coil Voltage:				
3VDC				
5VDC				
6VDC				
9VDC				
12VDC				
18VDC				
24VDC				

DIMENSIONS (Units = mm)

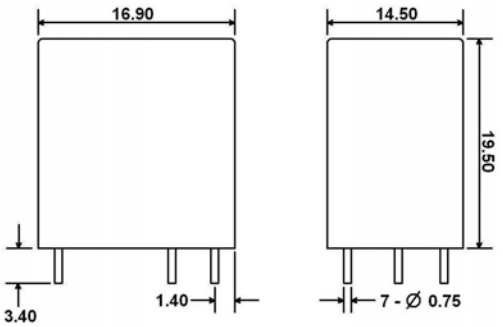

SINGLE PACKAGE

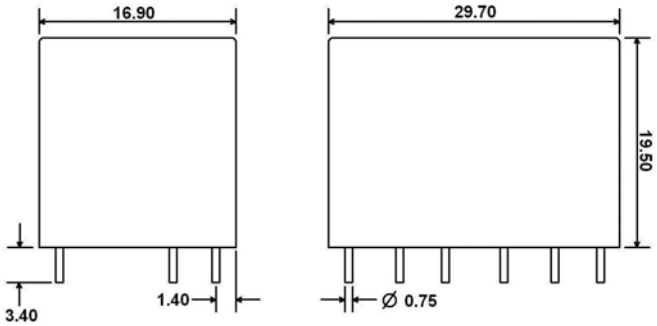

DUAL PACKAGE

SCHEMATICS & PC LAYOUTS (BOTTOM VIEWS)

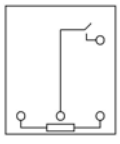

1A

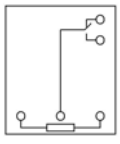

1C

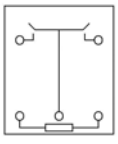

1U

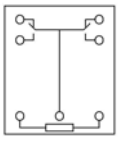

1W

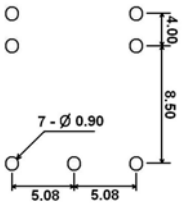

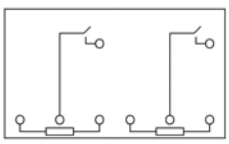

2A

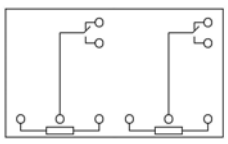

2C

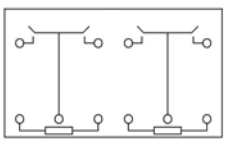

2U

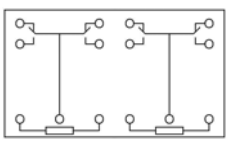

2W

