CT03 Series
SMT Current Sense Transformer

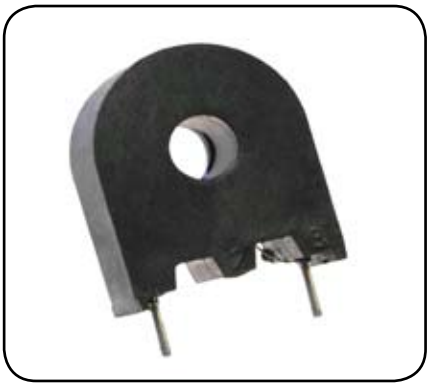

Features

- Encapsulated to Meet UL1950 and EN60950 Creepage/Clearance spacing
- Available in Unipolar and Bipolar configurations
- Meets UL Class B Insulation System

Applications

- Feedback Control
- Overload Protection
- Detecting Load Drop or Shutdown

Packaging Tray=144 pieces, Box=12 Trays, Box=1728 pieces

Mechanical - Figure A

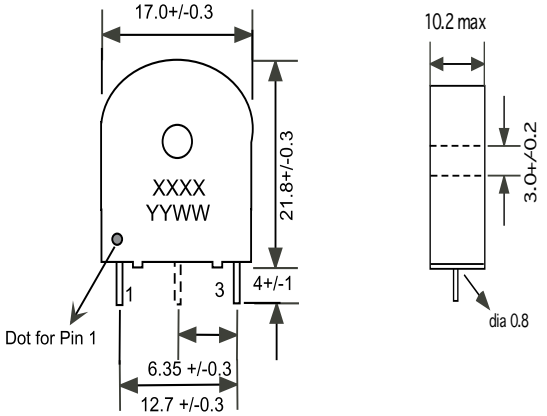

Schematic

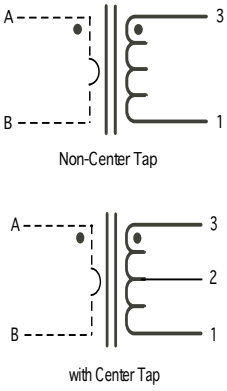

Mechanical - Figure B

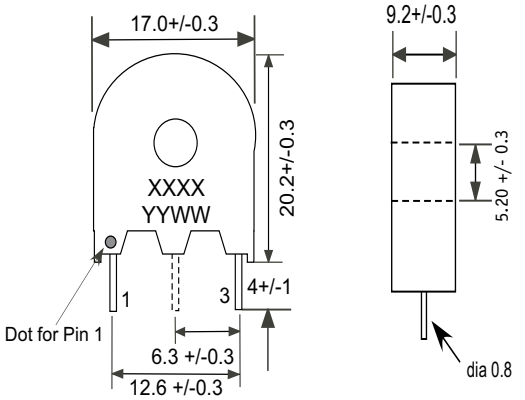

unit: mm

Electrical Specifications

Part Number	Turns Ratio	Ls[1] (mH, min)	Frequency (KHz)	Rs (Ω, max.)	Terminating[4] Resistor (Ω)	Hi-Pot Vac
CT03-050-B_	1:50	5	17.5	0.6	50	3750
CT03-100-B_	1:100	20	17.5	1.3	100	3750
CT03-200-B_	1:200	80	17.5	4.5	200	3750
CT03-750-A_	1:750	1125	1.0	34.0	750	3750
CT03-1000-A_	1:1000	1500	1.0	57.0	1000	3750

1. Electrical specifications at 25°C.
2. Operating temperature range: -40°C to +130°C.
3. Meets UL 94V-0.
4. Terminating resistor for 1V out with 1A flowing through primary.

RoHS

Add designator to end of p/n
C = Center Tap Secondary
N = Non-Center Tap Secondary