CSTLS16M0X51Z-B0

In Production RoHS REACH

Appearance & Shape



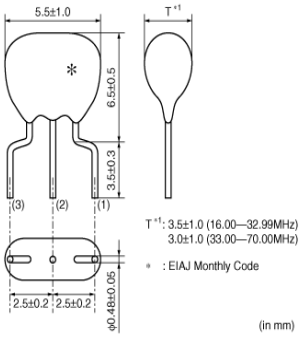

Features

MURATA's ceramic resonator, CERALOCK(R) with built-in load capacitors, has been widely applied as the most suitable component for clock oscillators in a broad range of microprocessors. The CSTLS series can be used in the design of oscillation circuits not requiring external load capacitors, enabling both high-density mounting and cost reduction.

Features
1. Oscillation circuits do not require external load capacitors. There is some variation in built-in capacitance values applicable to various IC.
2. Stable over a wide temperature range.
3. Compact, lightweight and exhibit superior shock resistance performance.
4. Enable the design of oscillator circuits requiring no adjustment.
5. Cost-effective and reliable availability.

Applications

Other Usage	Consumer/Industrial

Packaging Information

Packaging	Specifications	Minimum Order Quantity
-B0	Bulk	500

Attention
1.This datasheet is downloaded from the website of Murata Manufacturing Co., Ltd. Therefore, it's specifications are subject to change or our products in it may be discontinued without advance notice. Please check with our sales representatives or product engineers before ordering.
2.This datasheet has only typical specifications because there is no space for detailed specifications.
Therefore, please review our product specifications or consult the approval sheet for product specifications before ordering.

CSTLS16M0X51Z-B0

Specifications

Shape	Lead
Frequency	16.000MHz
Frequency Tolerance	±0.5%
Operating Temperature Range	-40℃ to 125℃
Frequency Shift by Temperature	±0.3%
Frequency Aging	±0.2%
Wash	Not avairable
Resonant Impedance	50Ω
Built-in Load Capacitance	5pF

Attention
1.This datasheet is downloaded from the website of Murata Manufacturing Co., Ltd. Therefore, it's specifications are subject to change or our products in it may be discontinued without advance notice. Please check with our sales representatives or product engineers before ordering.
2.This datasheet has only typical specifications because there is no space for detailed specifications.
Therefore, please review our product specifications or consult the approval sheet for product specifications before ordering.

CSTLS16M0X51Z-B0

Product Data

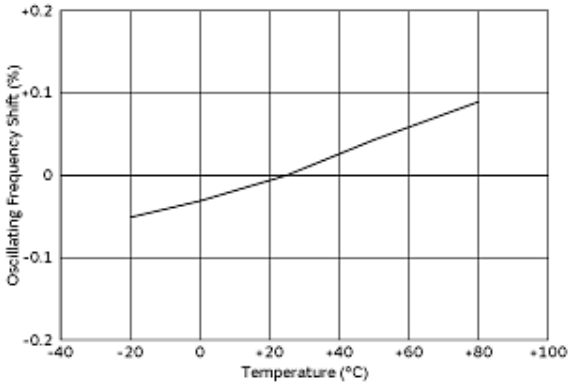

Temperature Characteristics

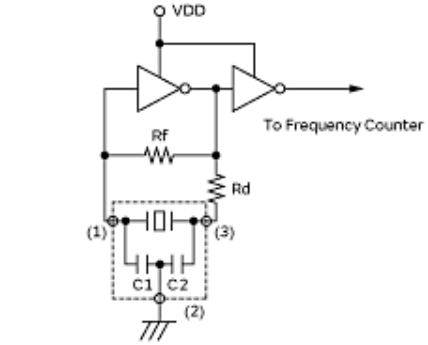

Regarding CERALOCK® with built-in capacitors, the terminal (1) and (3) are interchangeable, but if connection is interchanged, the specification of initial tolerance frequency may not be guaranteed.
*Please see dimensions about terminal numbers.

Measurement Circuit

Attention
1.This datasheet is downloaded from the website of Murata Manufacturing Co., Ltd. Therefore, it's specifications are subject to change or our products in it may be discontinued without advance notice. Please check with our sales representatives or product engineers before ordering.
2.This datasheet has only typical specifications because there is no space for detailed specifications.
Therefore, please review our product specifications or consult the approval sheet for product specifications before ordering.