SCOPE

This specification applies to magnetic buzzer, CST-911AP

SPECIFICATION

No.	Item	Unit	Specification	Condition
1	Rated Voltage	Vo-p	1.5	Vo-p  0V
2	Operating Volt.	Vo-p	1.0~2.0	
3	Mean Current	mA	Max. 80	Applying rated voltage,2730Hz square wave, 1/2duty
4	Coil Resistance	Ω	6.0±1.0	
5	Sound Output	dBA	Min.85 (Typical 92)	Distance at 10cm(A-weight free air). Applying rated voltage 2730Hz,square wave, 1/2duty
6	Rated Frequency	Hz	2730	
7	Operating Temp.	℃	-20 ~ -60	
8	Storage Temp.	℃	-30 ~ +70	
9	Dimension	mm	ϕ9.0 x H4.5	See attached drawing.
10	Weight	gram	1.0	
11	Material		PPO(Black)	
12	Terminal		Pin type (Plating Au)	See attached drawing.
13	Environmental Protection Regulation		RoHS	

TYPICAL FREQUENCY RESPONSE CURVE

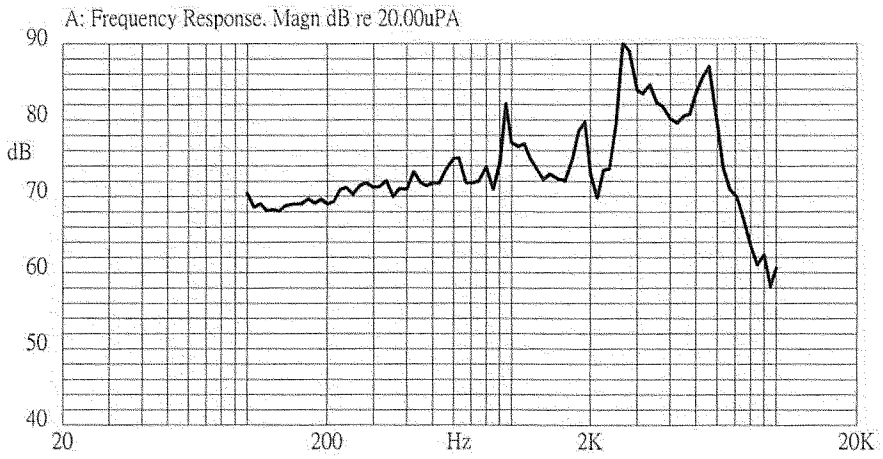

All information contained herein applies only to the above listed part number. Other versions of this part number with electrical or mechanical variations are available. Contact CUI Inc. for futher assistance.

APPEARANCE DRAWING

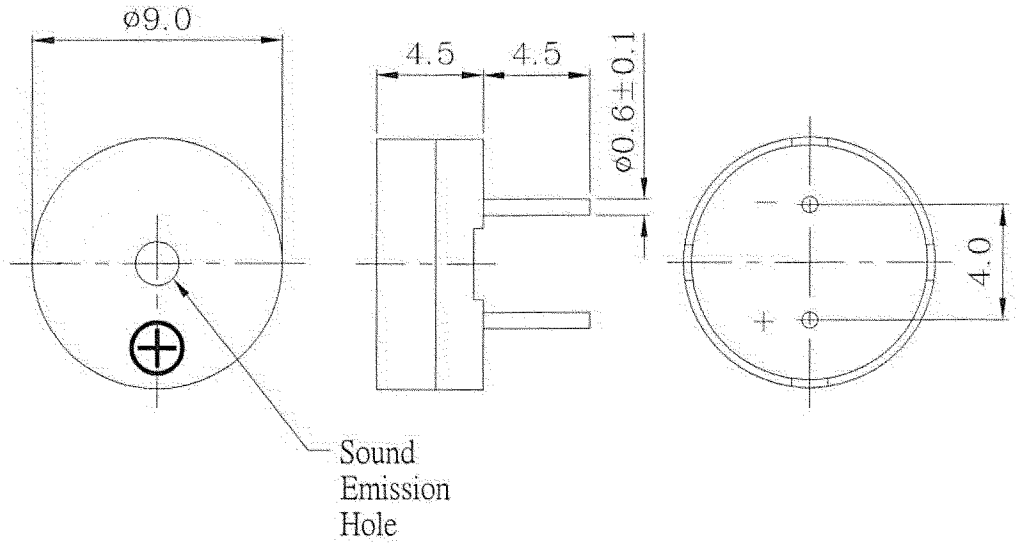

Tol: ± 0.5
Unit: mm

MEASUREMENT METHOD

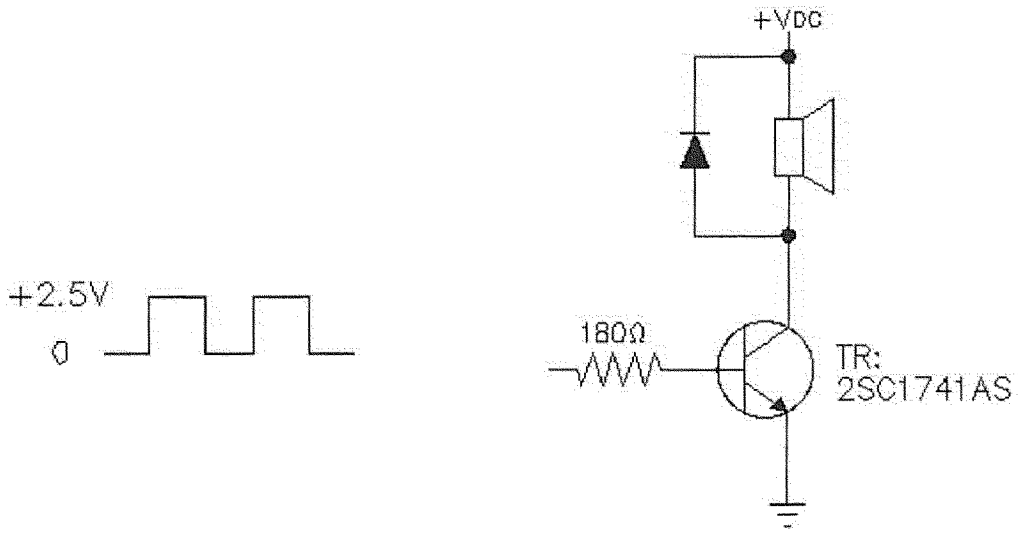

All information contained herein applies only to the above listed part number. Other versions of this part number with electrical or mechanical variations are available. Contact CUI Inc. for futher assistance.

MECHANICAL CHARACTERISTICS

No.	Item	Test condition	Evaluation standard
1	Solderability	Lead terminals are immersed in rosin for 5 seconds and then immersed in solder bath of +270±5℃ for 3±1 seconds.	90% min. lead terminals shall be wet with solder. (Except the edge of terminal)
2	Soldering Heat Resistance	Lead terminal are immersed up to 1.5mm from sounder's body in solder bath of +260±5℃ for 3±1 seconds.	No interference in operation
3	Terminal Mechanical Strength	The force 10 seconds of 9.8N (1.0kg) is applied to each terminal in axial direction.	No damage and cutting off
4	Vibration	Buzzer shall be measured after being applied vibration of amplitude of 1.5mm with 10 to 55hz band of vibration frequency to each of 3 per-pendicular directions for 2 hours.	After the test the part shall meet specifications with-out any damage in appearance and the SPL should be in ±10dBA compared with initial one.
5	Drop test	The part only shall be dropped from a height of 75cm onto a 40mm thick wooden board 3 times in 3 axes (X.Y.Z). (a total of 9 times).	

ENVIRONMENT TEST

No.	Item	Test condition	Evaluation standard
1	High temp. test	After being placed in a chamber at +70℃ for 96 hours.	After the test the part shall meet specifications with-out any degradation in appearance and performance except SPL. after 4 hours at +25℃. the SPL should be in ±10dBA compared with initial one.
2	Low temp. test	After being placed in a chamber at -30℃ for 96 hours.	
3	Thermal Shock	The part shall be subjected to 10 cycles. One cycle shall consist of; 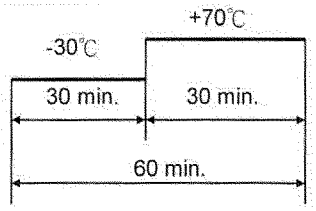	
4	Temp./ Humidity Cycle	The part shall be subjected to 10 cycles. One cycle shall be 24 hours and consist of; 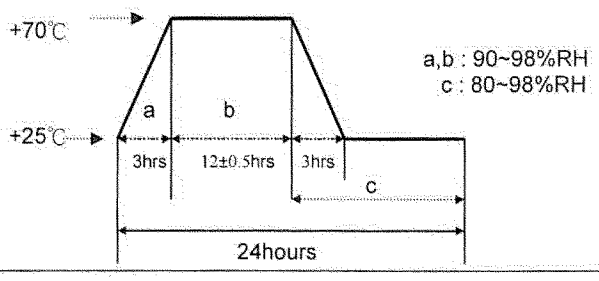	

All information contained herein applies only to the above listed part number. Other versions of this part number with electrical or mechanical variations are available. Contact CUI Inc. for futher assistance.

RELIABILITY TEST

No.	Item	Test condition	Evaluation standard
1	Operating life test	1.Continuous life test The part shall be subjected to 72 hours at +45℃ with 1.5V ,2730Hz applied. 2.Intermittent life test A duty cycle of 1 minute on, 1 minutes off, a minimum of 10000 times at room temp.(+25±10℃) with 1.5V ,2730Hz applied.	After the test the part shall meet specifications with-out any degradation in appearance and performance except SPL. after 4 hours at +25℃. the SPL should be in ±10dBA compared with initial one.

TEST CONDITION.

Standard Test Condition : a) Temperature : +5 ~ +35℃ b) Humidity : 45-85% c) Pressure : 860-1060mbar

Judgement Test Condition : a) Temperature : +25 ± 2℃ b) Humidity : 60-30% c) Pressure : 860-1060mbar

PACKING STANDARD

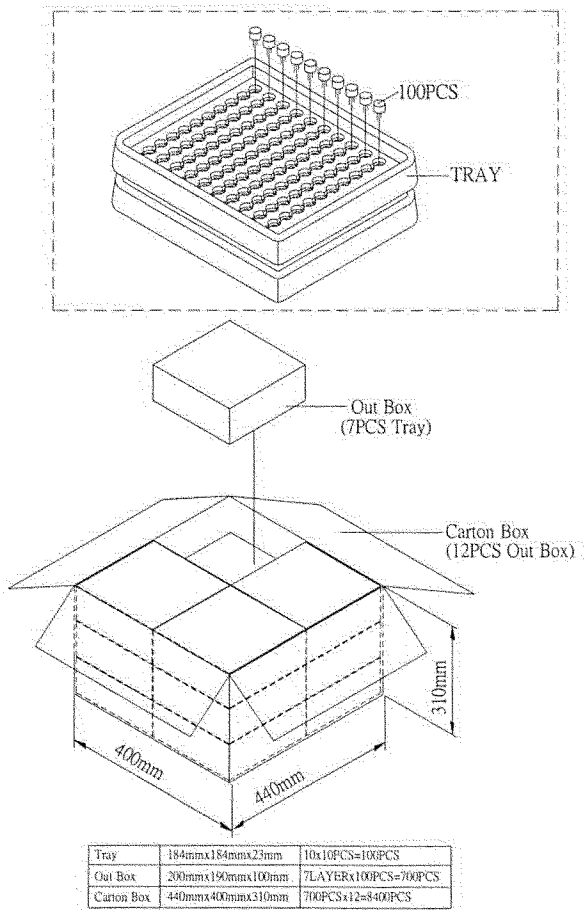

Tray	184mmx184mmx23mm	10x10PCS=100PCS
Out Box	200mmx190mmx100mm	7LAYERx100PCS=700PCS
Carton Box	440mmx400mmx310mm	700PCSx12=8400PCS

All information contained herein applies only to the above listed part number. Other versions of this part number with electrical or mechanical variations are available. Contact CUI Inc. for futher assistance.