CHINA
SEMICONDUCTOR
CORPORATION

Spec. No.	PS-ND-08072501
Rev.	A

PRODUCT SPECIFICATION

Model No：CST-332A9/333A9

Descriptions:

- 0.36 Inch Triad Digits Display
- CST-332: Common Anode
- CST-333: Common Cathode
- Emitting Color：Super Bright Amber

CUSTOMER APPROVED SIGNATURES	APPROVED BY	CHECKED BY	PREPARED BY

CHINA SEMICONDUCTOR CORPORATION
Address:2FL. NO.909,Chung-Cheng Road,
Chung-Ho City Taipei Hsien,Taiwan.

Tel:886-2-2223-9696
Fax:886-2-2223-9377

OPTO PLUS TECHNOLOGIES CO.,LTD
Address:696 Shun jiang Rd.,Ji Shan St.Shaoxing,
ZheJiang,China

Tel:86-0575-88623888
Fax:86-0575-88623112

http://www.csctw.com.tw

Model No：CST-332/333A9

■ Features -

1. 0.36 inch (9.2mm) digit height.
2. Case mold type.
3. RoHS compliant.
4. Low power consumption.
5. Easy mounting on P.C. board or socket.

■ Device Selection Guide -

Part No.	Chip		Description
	Material	Emitted Color	
CST-332A9	AlGaInP	Super Bright Amber	Common Anode
CST-333A9	AlGaInP	Super Bright Amber	Common Cathode

■ Package Dimensions -

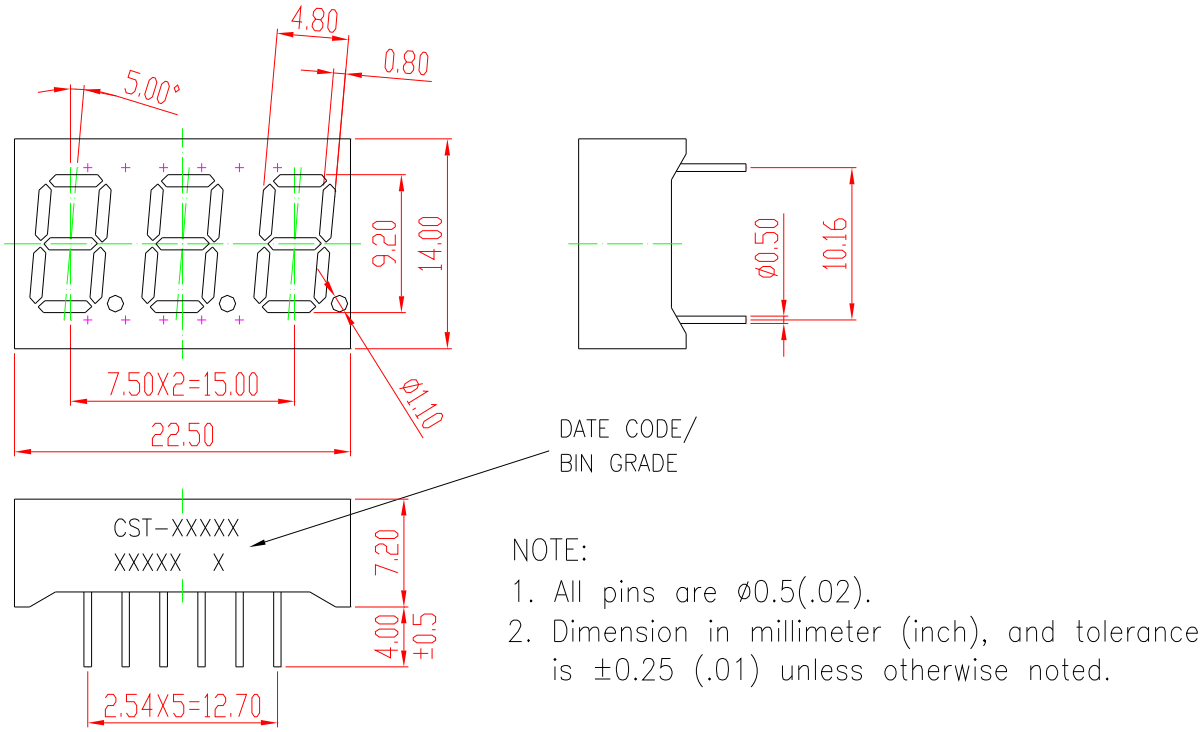

Model No：CST-332/333A9

■ Internal Circuit Diagrams -

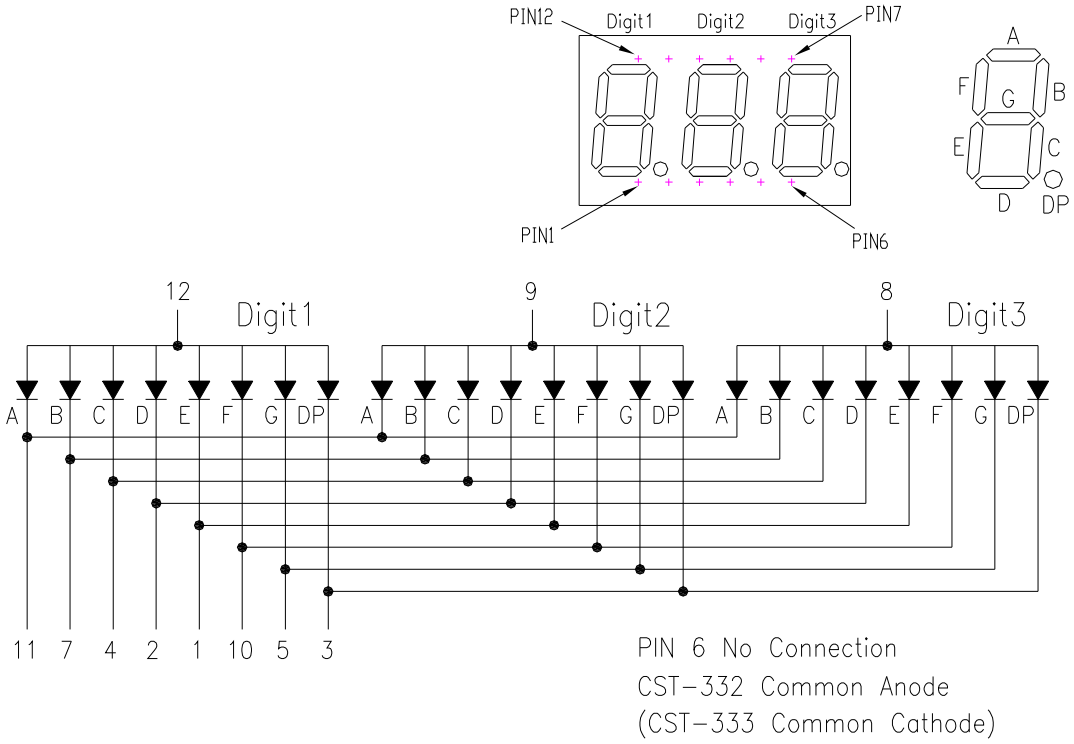

■ Absolute Maximum Rating -

(Ta=25℃)

Parameter	Symbol	Rating	Unit
Power Dissipation Per Dice	P_{AD}	70	mW
Continuous Forward Current Per Dice	I_{AF}	25	mA
Peak Current Per Dice(duty cycle 1/10, 1KHz)	I_{PF}	90	mA
Derating Linear From 25℃ Per Dice	-	0.33	mA/℃
Reverse Voltage Per Dice	V_R	5	V
Operating Temp.	Topr	-35 ~ +85	℃
Storage Temp.	Tstg	-35 ~ +85	℃
Solder temperature 1/16 inch below seating plane for 3 seconds at 260℃			

Model No：CST-332/333A9

■ Electro-optical Characteristics -

(Ta=25℃)

Parameter	Symbol	Min.	Typ.	Max.	Unit	Condition
Forward Voltage Per Segment	V_F	-	2.0	2.8	V	I_F=20mA
Luminous Intensity Per Segment	Iv	-	15	-	mcd	I_F=10mA
Peak Emission Wavelength	λp	-	612	-	nm	I_F=20mA
Dominant Wavelength	λd	-	606	-	nm	I_F=20mA
Spectrum Radiation Bandwidth	$\Delta \lambda$	-	20	-	nm	I_F=20mA
Reverse Current	IR	-	-	100	μA	V_R=5V
Luminous Intensity Matching Ratio	IV-m	-	-	2:1	-	I_F=10mA

Model No：CST-332/333A9

■ Typical Electrical / Optical Charateristics Curves -

(Ta = 25℃ Unless Otherwise Noted)

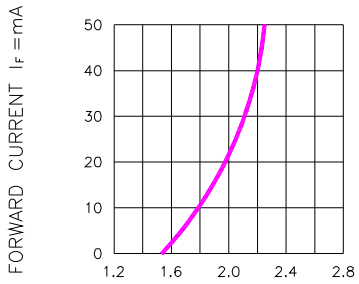

FORWARD VOLTAGE (VF)—VOLTS

Fig.1 FORWARD CURRENT VS. FORWARD VOLTAGE

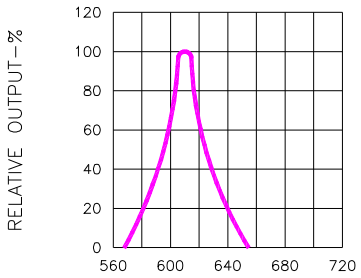

WAVELENGTH (λ)—nm

Fig.2 SPECTRAL RESPONSE

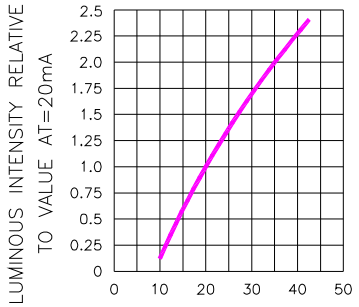

IF—FORWARD CURRENT—mA

Fig.3 RELATIVE LUMINOUS INTENSITY VS. FORWARD CURRENT

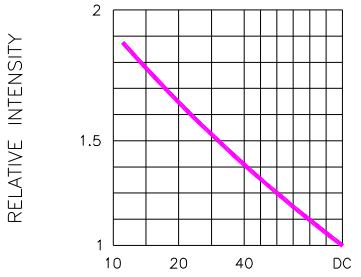

DUTY CYCLE % PER SEGMENT
(AVERAGE IF=10mA)

Fig.5 LUMINOUS INTENSITY VS. DUTY CYCLE

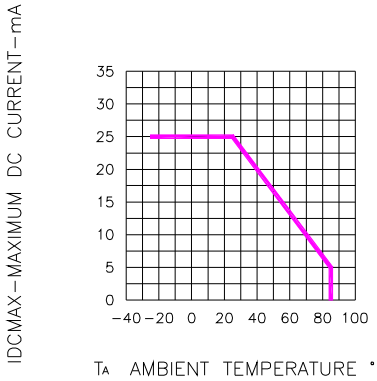

TA AMBIENT TEMPERATURE °C

Fig.4 MAXIMUM ALLOWABLE DC CURRENT PER SEGMENT VS. A FUNCTION OF AMBIENT TEMPERATURE

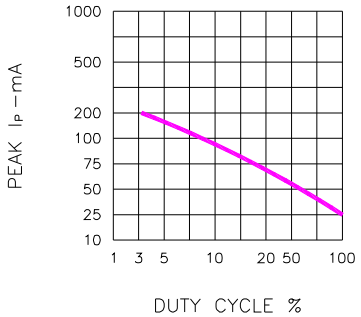

DUTY CYCLE %

Fig.6 MAX PEAK CURRENT VS. DUTY CYCLE %
(REFRESH RATE f=1 KHz)

Model No：CST-332/333A9

■ Package Dimensions

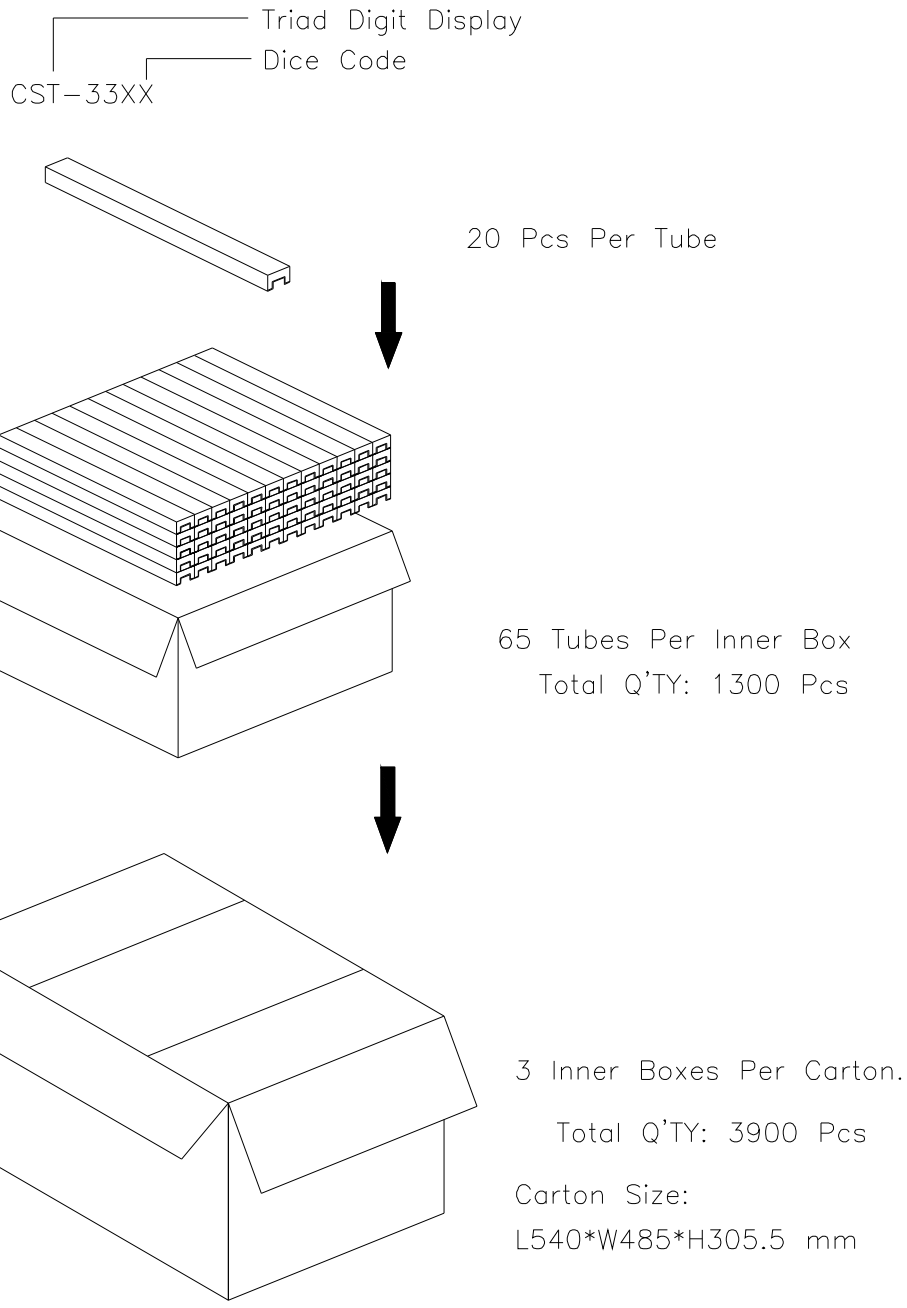

Note: The specifications are subject to change without notice. Please contact us for updated information.