CHINA
SEMICONDUCTOR
CORPORATION

Spec. No.	PS-ND-0807
Rev.	A

PRODUCT SPECIFICATION

Model No：CSS-1814B7/1814B7

Descriptions:
• 1.80 Inch Single Digit Display
• Emitting Color：Super Bright Blue

CUSTOMER APPROVED SIGNATURES	APPROVED BY	CHECKED BY	PREPARED BY
			陳新強

CHINA SEMICONDUCTOR CORPORATION
Address:2FL. NO.909,Chung-Cheng Road,
Chung-Ho City Taipei Hsien,Taiwan.

Tel:886-2-2223-9696
Fax:886-2-2223-9377

OPTO PLUS TECHNOLOGIES CO.,LTD
Address:696 Shun jiang Rd.,Ji Shan St.Shaoxing,
ZheJiang,China

Tel:86-0575-88623888
Fax:86-0575-88623112

Model No : CSS-1814B7/1814B7

Features -

1. 1.80 inch (45.0mm) digit height.
2. Case mold type.
3. RoHS compliant.
4. Low power consumption.
5. ESD>1KV(HBM)
6. Easy mounting on P.C. board or socket.

Device Selection Guide -

Part No.	Chip		Description
	Material	Emitted Color	
CSS-1814B7	InGaN	Super Bright Blue	Common Anode
CSS-1815B7	InGaN	Super Bright Blue	Common Cathode

Mechanical Dimensions -

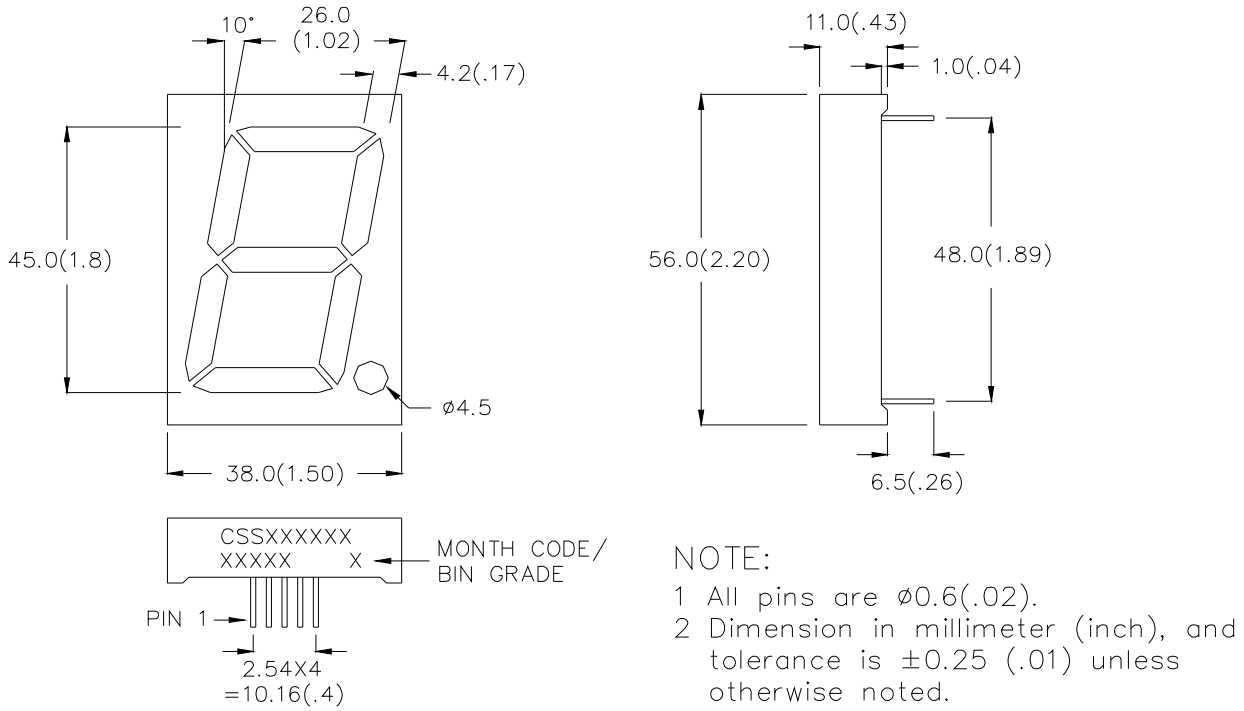

NOTE:
1 All pins are ø0.6(.02).
2 Dimension in millimeter (inch), and tolerance is ±0.25 (.01) unless otherwise noted.

Model No：CSS-1814B7/1814B7

■ Internal Circuit Diagrams -

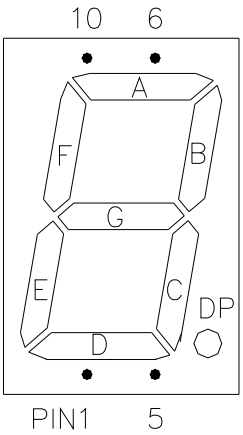

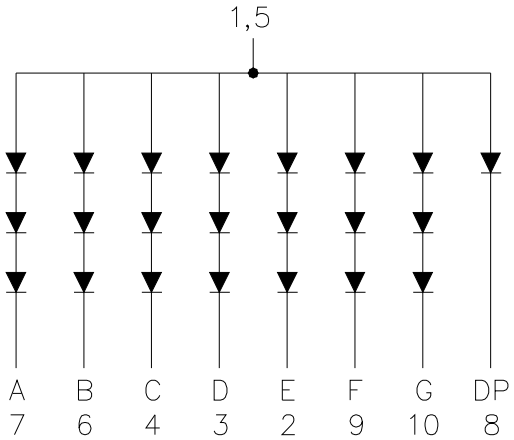

CSS-1814 Common Anode
(CSS-1815 Common Cathode.)

■ Absolute Maximum Rating -

(Ta=25℃)

Parameter	Symbol	Rating	Unit
Power Dissipation Per Dice	Pd	120	mW
Continuous Forward Current Per Dice	IAF	30	mA
Peak Current Per Dice	IPF	100	mA
Derating Linear From 25℃ Per Dice	-	0.4	mA/℃
Reverse Voltage Per Dice	VR	5	V
Operating Temperature	Topr	-35 ~ +85	℃
Storage Temperature	Tstg	-35 ~ +85	℃
Solder temperature 1/16 inch below seating plane for 3 seconds at 260 ℃			

Model No：CSS-1814B7/1814B7

■ **Electro-optical Characteristics -**

(Ta=25℃)

Parameter	Symbol	Min.	Typ.	Max.	Unit	Condition
Forward Voltage Per Segment (DP)	VF	-	10.5(3.5)	12(4.0)	V	IF=20mA
Luminous Intensity Per Segment	Iv	-	55	-	mcd	IF=10mA
Peak Emission Wavelength	λP	-	468	-	nm	IF=20mA
Dominant Wavelength	λd	-	470	-	nm	IF=20mA
Spectrum Radiation Bandwidth	Δλ	-	30	-	nm	IF=20mA
Reverse Current	IR	-	-	100	μA	VR=12V
Luminous Intensity Matching Ratio	IV-m	-	-	2:1	-	IF=10mA

Model No : CSS-1814B7/1814B7

■ Typical Electrical / Optical Charateristics Curves -

(Ta = 25℃ Unless Otherwise Noted)

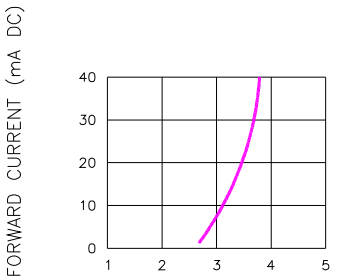

Fig.1 FORWARD CURRENT VS. FORWARD VOLTAGE

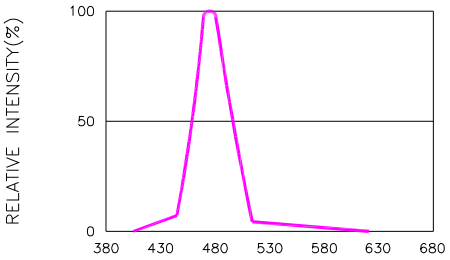

Fig.2 RELATIVE INTENSITY VS. WAVELENGTH

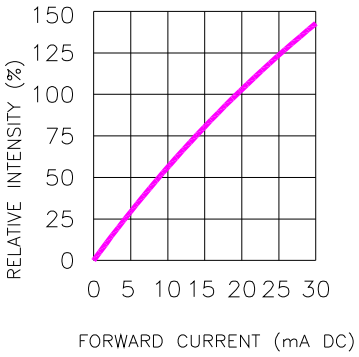

Fig.3 RELATIVE INTENSITY
VS. FORWARD CURRENT

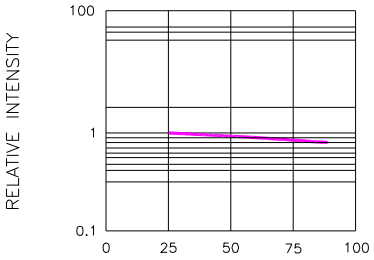

Fig.4 RELATIVE INTENSITY VS.LEAD TEMPERATURE
(PULSED 20 mA; 300us
PULSE,10ms PERIOD)

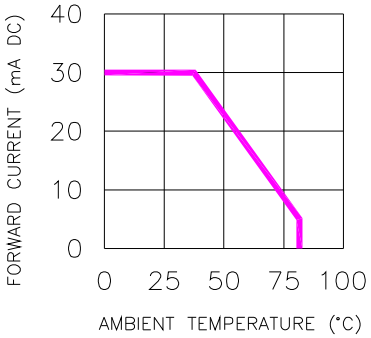

Fig.5 FORWARD CURRENT
VS. AMBIENT TEMPERATURE

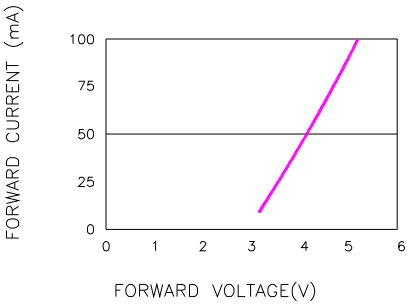

Fig.6 PEAK FORWARD VOLTAGE
VS.FORWARD(100us TEST PULSE,
1% DUTY CYCLE)

Model No：CSS-1814B7/1814B7

■ Package Dimensions

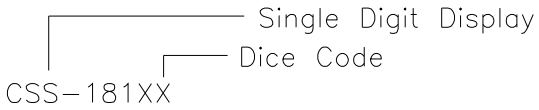

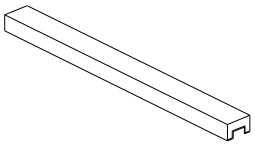

13 PCS per tube

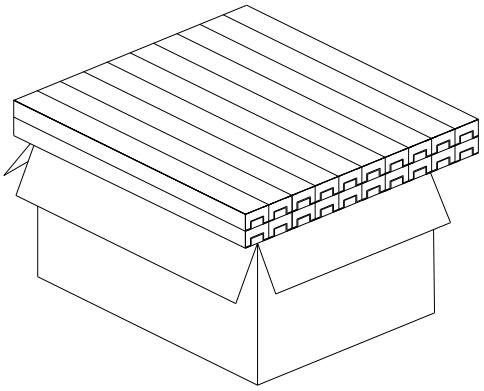

20 Tubes per inner box

Total Q'TY: 260 pcs

3 Inner boxes per carton.

Total Q'TY: 780 pcs

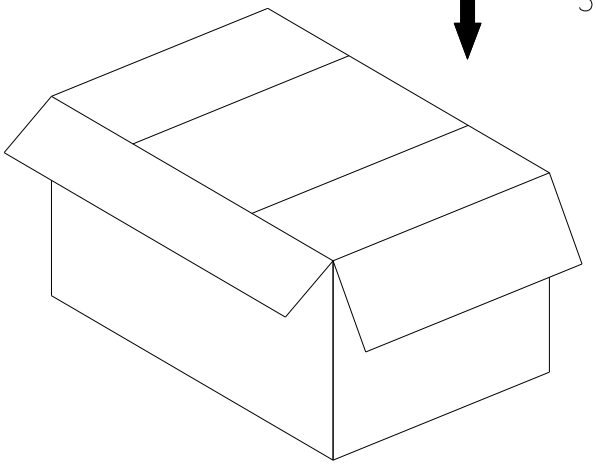

Carton size:
L54xW48.5xH30.5cm