CHINA
SEMICONDUCTOR
CORPORATION

Spec. No.	PS-ND-0711
Rev.	A

PRODUCT SPECIFICATION

Model No：CSS-15104V9/15105V9

Descriptions:
• 1.5 Inch Single Digit Display • Emitting Color：Super Bright Orange

CUSTOMER APPROVED SIGNATURES	APPROVED BY	CHECKED BY	PREPARED BY
			陳新強

CHINA SEMICONDUCTOR CORPORATION
Address:2FL. NO.909,Chung-Cheng Road,
Chung-Ho City Taipei Hsien,Taiwan.

Tel:886-2-2223-9696
Fax:886-2-2223-9377

OPTO PLUS TECHNOLOGIES CO.,LTD
Address:696 Shun jiang Rd.,Ji Shan St.Shaoxing,
ZheJiang,China

Tel:86-0575-8623888
Fax:86-0575-8623112

http://www.csctw.com.tw

Model No：CSS-15104V9/15105V9

■ Features -

1. 1.5 inch (38.0mm) digit height.
2. Case mold type.
3. RoHS compliant.
4. Low power consumption.
5. ESD>1KV(HBM)
6. Easy mounting on P.C. board or socket.

■ Device Selection Guide -

Part No.	Chip		Description
	Material	Emitted Color	
CSS-15104V9	AlGaInP	Super Bright Orange	Common Anode
CSS-15105V9	AlGaInP	Super Bright Orange	Common Cathode

■ Mechanical Dimensions -

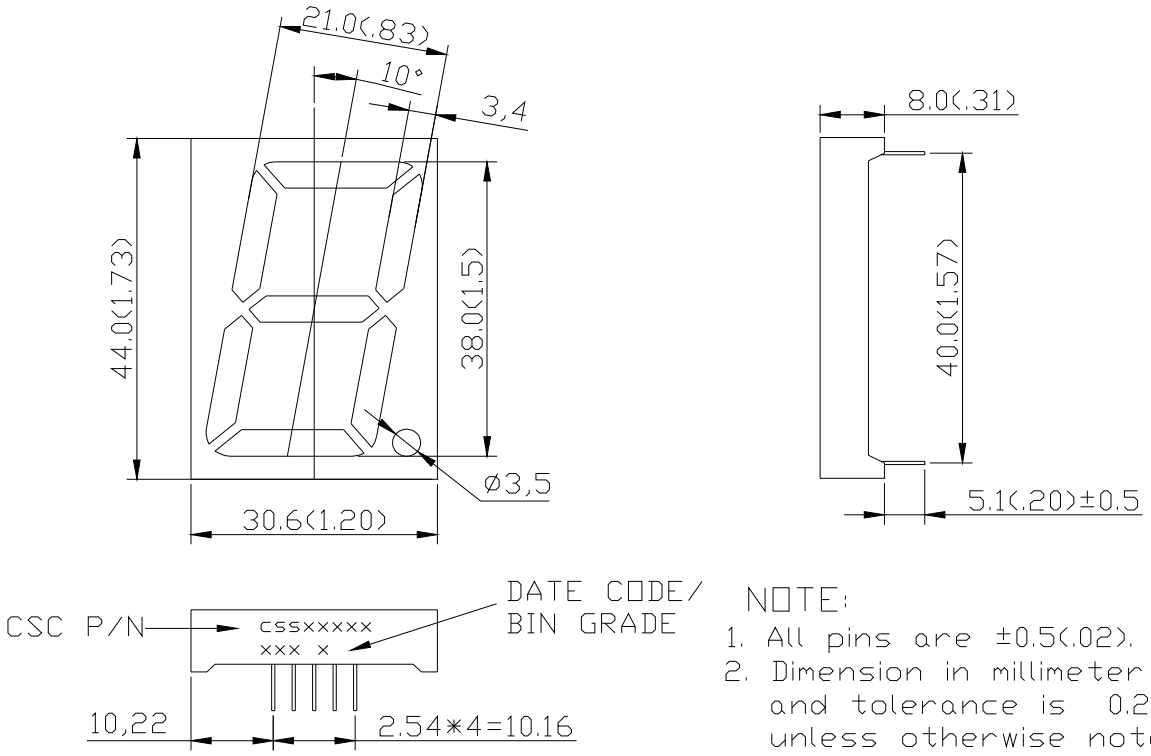

Model No：CSS-15104V9/15105V9

■ Internal Circuit Diagrams -

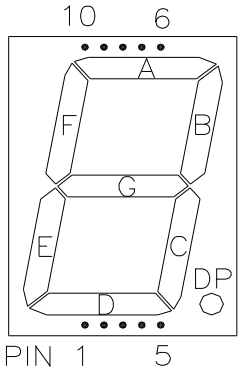

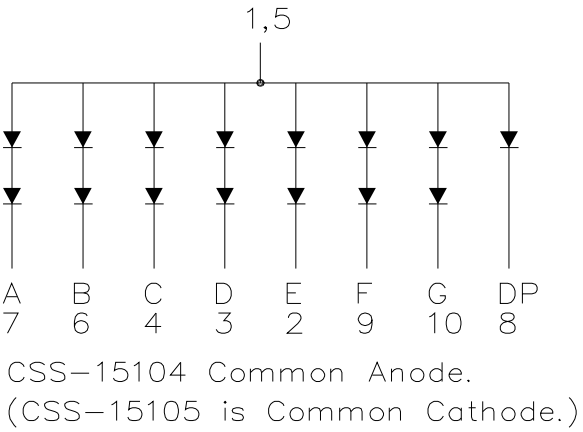

■ Absolute Maximum Rating -

(Ta=25℃)

Parameter	Symbol	Rating	Unit
Power Dissipation Per Dice	**Pd**	75	mW
Continuous Forward Current Per Dice	**I_{AF}**	25	mA
Peak Current Per Dice (duty cycle 1/10,1KHz)	**I_{PF}**	90	mA
Derating Linear From 25℃ Per Dice	-	0.33	mA/℃
Reverse Voltage Per Dice	**V_R**	5	V
Operating Temp.	**Topr**	-35 ~ +85	℃
Storage Temp.	**Tstg**	-35 ~ +85	℃
Solder temperature 1/16 inch below seating plane for 3 seconds at 260℃			

Model No：CSS-15104V9/15105V9

■ **Electro-optical Characteristics -**

(Ta=25℃)

Parameter	Symbol	Min.	Typ.	Max.	Unit	Condition
Forward Voltage Per Segment (DP)	VF	-	4.2(2.1)	5.6(2.8)	V	I_F=20mA
Luminous Intensity Per Segment	Iv	-	45	-	mcd	I_F=10mA
Peak Emission Wavelength	λp	-	632	-	nm	I_F=20mA
Dominant Wavelength	λd	-	624	-	nm	I_F=20mA
Spectrum Radiation Bandwidth	$\Delta \lambda$	-	20	-	nm	I_F=20mA
Reverse Current	IR	-	-	100	μA	V_R=10V
Luminous Intensity Matching Ratio	IV-m	-	-	2:1	-	I_F=10mA

Model No：CSS-15104V9/15105V9

■ Typical Electrical / Optical Charateristics Curves -

(Ta = 25℃ Unless Otherwise Noted)

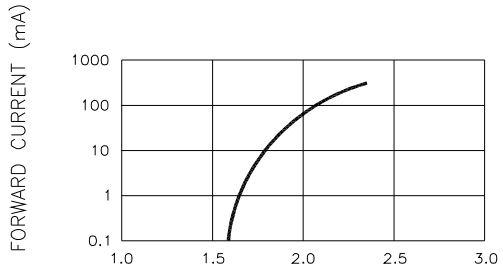

Fig.1 FORWARD CURRENT VS. FORWARD VOLTAGE

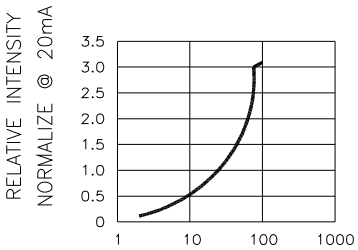

Fig.2 RELATIVE INTENSITY
VS. FORWARD CURRENT

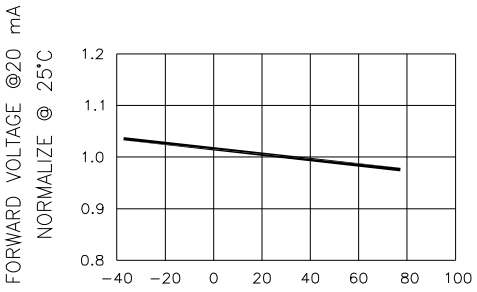

Fig.3 FORWARD VOLTAGE
VS. TEMPERATURE

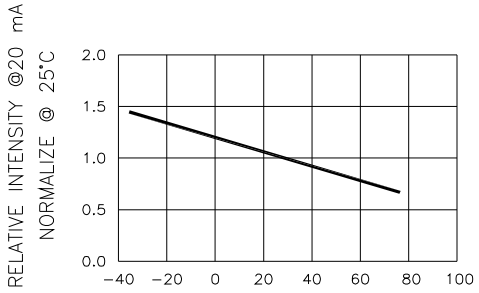

Fig.4 RELATIVE INTENSITY
VS. TEMPERATURE

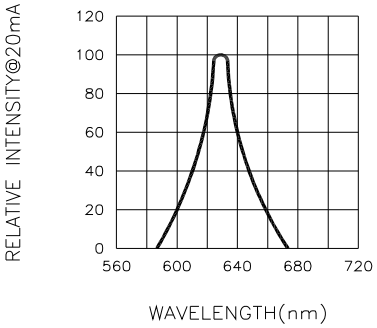

Fig.5 RELATIVE INTENSITY VS. WAVELENGTH

Model No：CSS-15104V9/15105V9

■ Package Dimensions

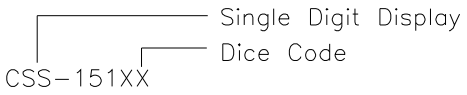

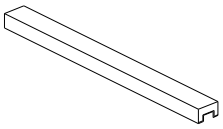

16 Pcs Per Tube

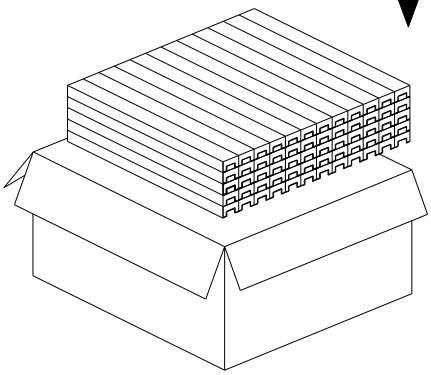

16 Tubes Per Inner Box
Total Q'TY: 256 Pcs

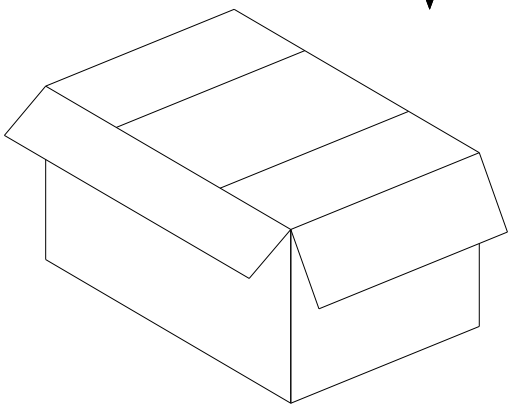

3 Inner Boxes Per Carton.

Total Q'TY: 768 Pcs

Carton Size:
L540*W485*H305.5 mm