Chip Scale Series Termination Array

Features

- 8 or 16 integrated high frequency series terminations
- Ultra small footprint Chip Scale Package
- Ceramic substrate
- 0.35mm Eutectic Solder Bumps, 0.65mm pitch

Applications

- Series resistive bus termination
- Isolated resistor array

Product Description

The CSPST is a high performance Integrated Passive Device (IPD) which provides series terminations suitable for use in high speed bus applications. Eight (8) or sixteen (16) series termination versions are provided. These resistors provide excellent high frequency performance in excess of 3GHz and are manufactured to an absolute tolerance as low as ±1%. The Chip Scale Package provides an ultra small footprint for this IPD and provides minimal parasitics compared to conventional packaging. Typical bump inductance is less than 25pH. The large solder bumps and ceramic substrate allow for standard attachment to laminate printed circuit boards without the use of underfill.

SCHEMATIC DIAGRAMS

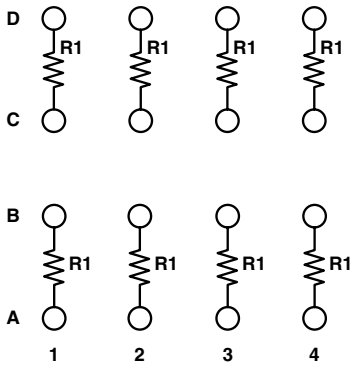

CSPST08

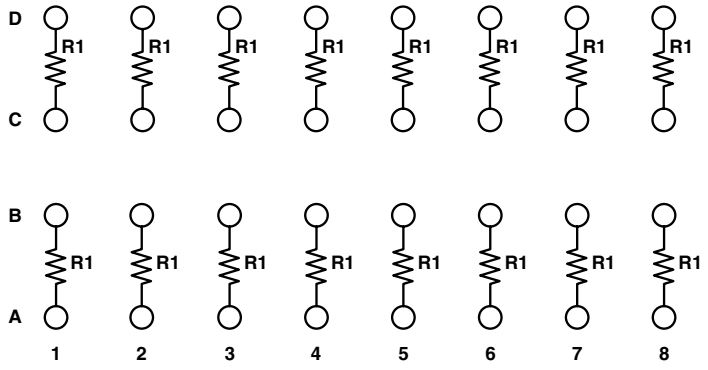

CSPST16

STANDARD VALUES	
Resistor Value	R1 = 22Ω, 33Ω, 39Ω, 47Ω, 51Ω, 56Ω,
Absolute Tolerance R	±1%, ±5%
TCR of Resistors	±100ppm
Power Rating/Resistor	100mW
Operating Temperature Range	–40°C to 85°C

© 2000 California Micro Devices Corp. All rights reserved.

Package Diagram (Bumps Up View)

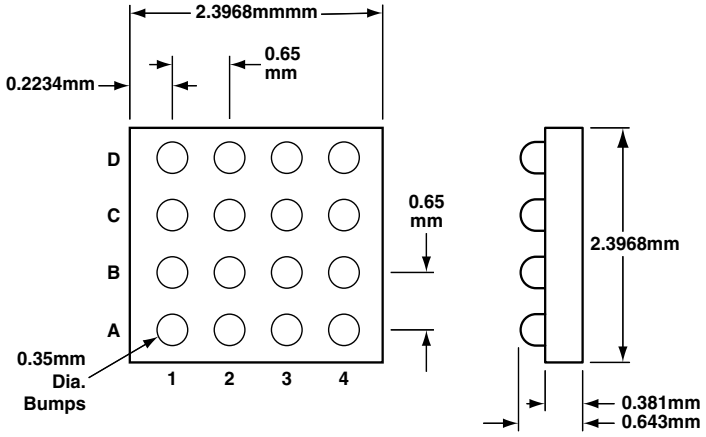

CSPST08

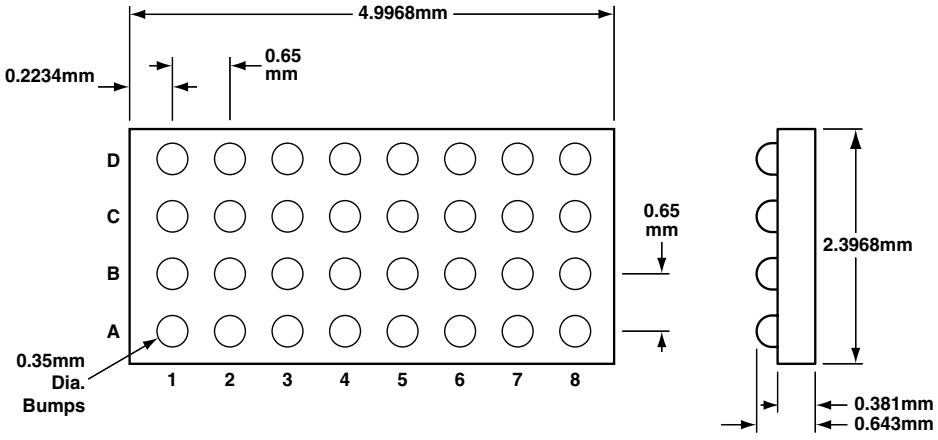

CSPST16

PRINTED CIRCUIT BOARD RECOMMENDATIONS	
Pad Size on PCB	0.300mm
Pad Shape	Round
Pad Definition	Non Solder Mask Defined Pads (NSMD)
Solder Mask Opening	0.350mm
Solder Stencil Thickness	0.152mm
Solder Stencil Aperture Opening	0.360mm (sq.)
Solder Flux Ratio	50/50
Solder Paste	No Clean
Bond Trace Finish	OSP (Entek Cu Plus 106A)

©2000 California Micro Devices Corp. All rights reserved.

Typical PCB Routing Diagram (Bumps Down View)

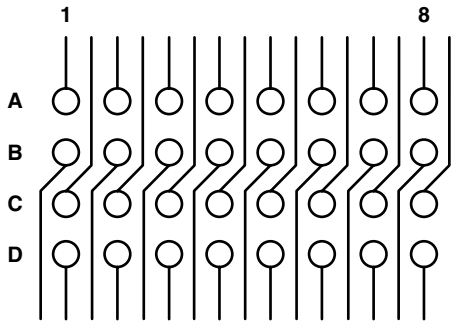

Typical Solder Reflow Thermal Profile (No Clean Flux)

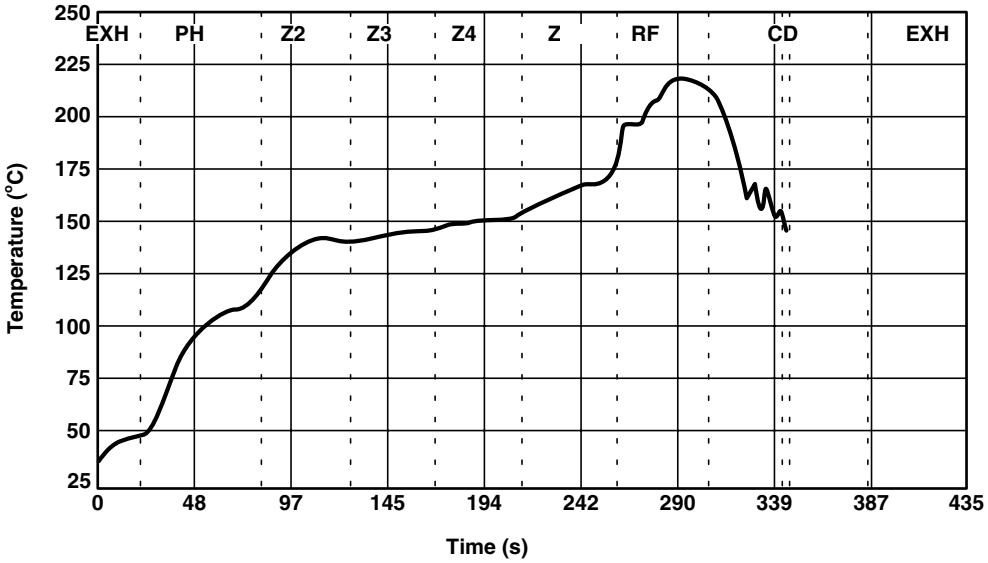

© 2000 California Micro Devices Corp. All rights reserved.

STANDARD PART ORDERING INFORMATION			
Package		Ordering Part Number	
Style	Terminations	Tape & Reel	Part Marking
Chip Scale	8	CSPST08-220F	None
Chip Scale	8	CSPST08-220J	None
Chip Scale	8	CSPST08-330F	None
Chip Scale	8	CSPST08-330J	None
Chip Scale	8	CSPST08-390F	None
Chip Scale	8	CSPST08-390J	None
Chip Scale	8	CSPST08-470F	None
Chip Scale	8	CSPST08-470J	None
Chip Scale	8	CSPST08-510F	None
Chip Scale	8	CSPST08-510J	None
Chip Scale	8	CSPST08-560F	None
Chip Scale	8	CSPST08-560J	None
Chip Scale	16	CSPST16-220F	None
Chip Scale	16	CSPST16-220J	None
Chip Scale	16	CSPST16-330F	None
Chip Scale	16	CSPST16-330J	None
Chip Scale	16	CSPST16-390F	None
Chip Scale	16	CSPST16-390J	None
Chip Scale	16	CSPST16-470F	None
Chip Scale	16	CSPST16-470J	None
Chip Scale	16	CSPST16-510F	None
Chip Scale	16	CSPST16-510J	None
Chip Scale	16	CSPST16-560F	None
Chip Scale	16	CSPST16-560J	None

PACKAGE		NON-STANDARD PART ORDERING INFORMATION	
Part Series	Terminations	Value Code: R1 (XXX)	Tolerance
Example (CSPST)	*(8)*	*(201)*	*(J)*
CSPST	8	First 2 digits are significant value. Third digit represents number of zeros to follow	F = ±1% J = ±5%
CSPST	16		

PART NUMBER KEY

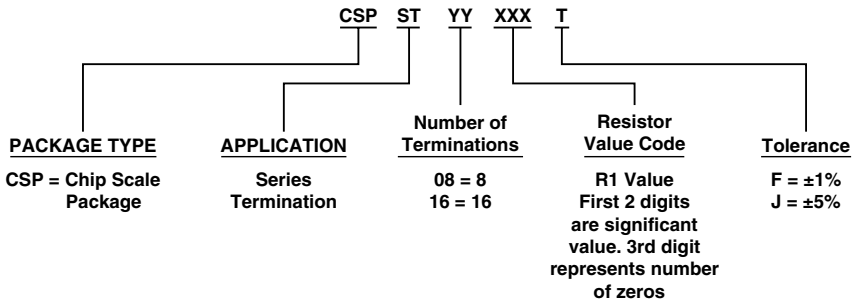

©2000 California Micro Devices Corp. All rights reserved.