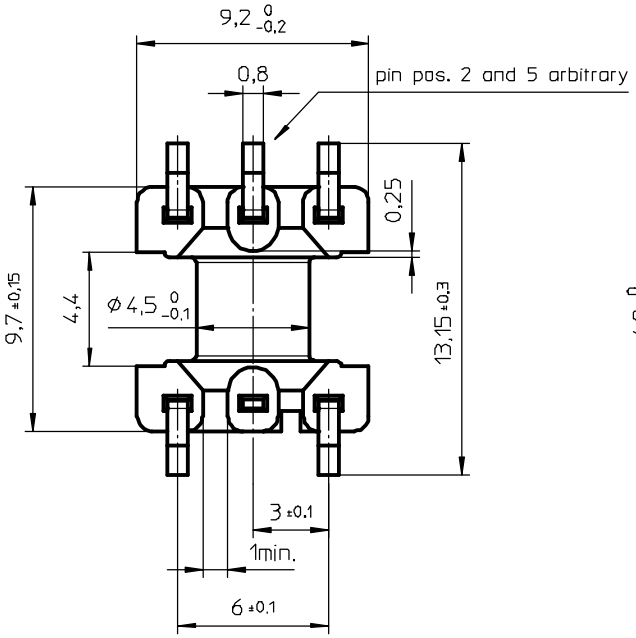

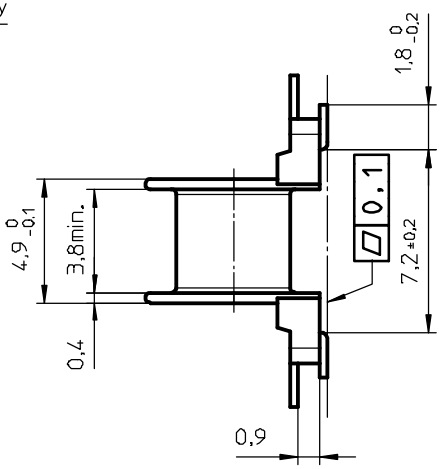

PROPOSED PAD ARRANGEMENT:

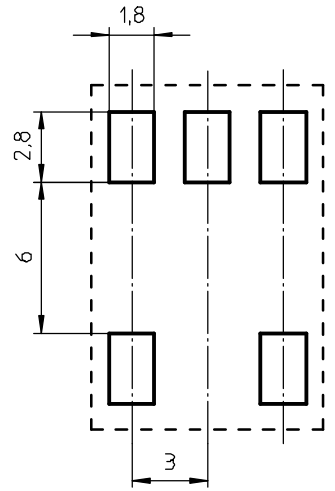

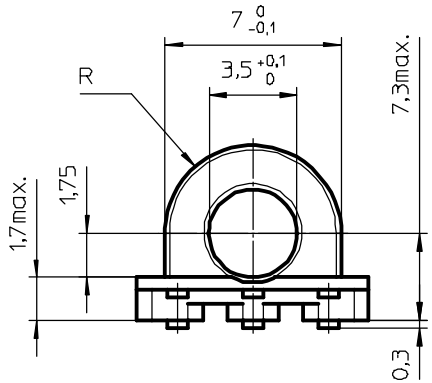

Coil former material:	Sumikon PM9630 (PF), glass-reinforced. UL file number: E41429 - UL94V-0.
Pin material:	CuSn - Ni flash. Sn plated.
Max operating temp.:	acc. to IEC 85 class F, 155°C.
Resistance to soldering heat:	acc to IEC 68-2-20 Part 2, Test Tb, method 1B, 350°C - 3,5s.
Solderability:	acc. to IEC 68-2-20 Part 2, Test Ta, method 1, 235°C - 2s.
Min. winding area:	4,56 mm^2.
Mean length of turn:	17,9 mm.

CLASS,NO.

CSHS-EP7-1S-5P-Z

4322 021 06351

1 03-06-03

NAME M.Veekens
MPA
CHECK CONTR.
SUPERS VERV.
DAT. 2003-06-03
001
SHEET 112 – 001
069
A3

Property of Elgendam Van
© FERROXCUBE 2000