CSBFB800KJ58-B0

To be discontinued RoHS REACH

< List of part numbers with package codes >
CSBFB800KJ58-B0

Appearance & Shape



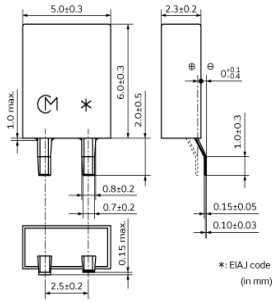

Features

MURATA's original package technologies have enabled the development of the kHz band CERALOCK(R). The series is perfect in miniature remote control units and AV modules. CERALOCK(R) can be reflow soldered and mounted by automatic placement equipment.

Features
1. Withstands reflow soldering.
2. Compatible with automatic placement equipment.
3. No adjustment is necessary for oscillation circuits.

Applications

Other Usage	Consumer/Industrial

Packaging Information

Packaging	Specifications	Minimum Order Quantity
-B0	Bulk	1000

Attention
1.This datasheet is downloaded from the website of Murata Manufacturing Co., Ltd. Therefore, it's specifications are subject to change or our products it may be discontinued without advance notice. Please check with our sales representatives or product engineers before ordering.
2.This datasheet has only typical specifications because there is no space for detailed specifications.
Therefore, please review our product specifications or consult the approval sheet for product specifications before ordering.

CSBFB800KJ58-B0

Specifications

Shape	SMD
Frequency	800.0kHz
Frequency Tolerance	±0.5%
Operating Temperature Range	-20℃ to 80℃
Frequency Shift by Temperature	±0.3%
Frequency Aging	±0.3%
Wash	avairable
Resonant Impedance	60Ω

Attention
1.This datasheet is downloaded from the website of Murata Manufacturing Co., Ltd. Therefore, it's specifications are subject to change or our products in it may be discontinued without advance notice. Please check with our sales representatives or product engineers before ordering.
2.This datasheet has only typical specifications because there is no space for detailed specifications.
Therefore, please review our product specifications or consult the approval sheet for product specifications before ordering.

CSBFB800KJ58-B0

Product Data

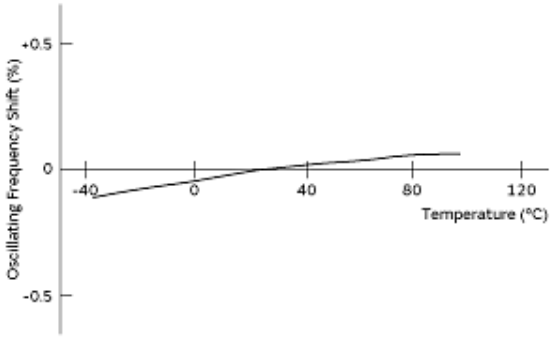

Temperature Characteristics

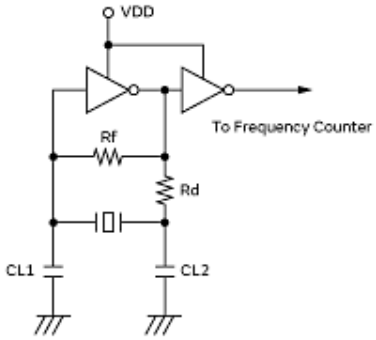

Measurement Circuit

Attention
1.This datasheet is downloaded from the website of Murata Manufacturing Co., Ltd. Therefore, it's specifications are subject to change or our products in it may be discontinued without advance notice. Please check with our sales representatives or product engineers before ordering.
2.This datasheet has only typical specifications because there is no space for detailed specifications.
Therefore, please review our product specifications or consult the approval sheet for product specifications before ordering.