## PNP EPITAXIAL PLANAR SILICON TRANSISTOR

**CSA952**
**(9AW)**
**TO-92**
**BCE**

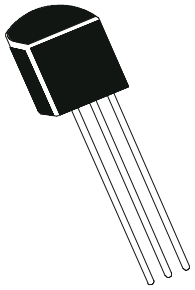

**MARKING : AS BELOW**

### Audio Frequency Power Amplifier.
### Complementary CSC2001

**ABSOLUTE MAXIMUM RATINGS(Ta=25deg C unless otherwise specified)**

| DESCRIPTION | SYMBOL | VALUE | UNIT |
|---|---|---|---|
| **Collector -Base Voltage** | BVCBO | 30 | V |
| **Collector Emitter Voltage** | BVCEO | 25 | V |
| **Emitter Base Voltage** | BVEBO | 5.0 | V |
| **Collector Current (DC)** | IC | 700 | mA |
| **Collector Current (Peak)** | ICP** | 1.0 | A |
| **Collector Power Dissipation** | Ptot | 600 | mW |
| **Operating And Storage Junction Temperature Range** | Tj, Tstg | -55 to +150 | deg C |

****PW=10ms, duty cycle=50%**

**ELECTRICAL CHARACTERISTICS (Ta=25 deg C Unless Otherwise Specified)**

| DESCRIPTION | SYMBOL | TEST CONDITION | MIN | TYP | MAX | UNIT |
|---|---|---|---|---|---|---|
| **Collector Cut off Current** | ICBO | VCB=30V, IE=0 | - | - | 100 | nA |
| | ICEO | VCE=25V, IB=0 | - | - | 1.0 | uA |
| **Emitter Cut off Current** | IEBO | VEB=5V, IC=0 | - | - | 100 | nA |
| **DC Current Gain** | hFE (1) | VCE=1V, IC=100mA* | 90 | - | 400 | |
| | hFE (2) | VCE=1V, IC=700mA* | 50 | - | - | |
| **Base Emitter Voltage** | VBE(on) | IC=10mA, VCE=6V* | 0.6 | - | 0.7 | V |
| **Collector Emitter Saturation Voltage** | VCE(Sat) | IC=700mA, IB=70mA* | - | - | 0.6 | V |
| **Base Emitter Saturation Voltage** | VBE(Sat) | IC=700mA, IB=70mA* | - | - | 1.2 | V |
| **Dynamic Characteristics** | | | | | | |
| **Transition Frequency** | ft | VCE=6V, IC=10mA, | 50 | - | - | MHz |
| **Collector Output Capacitance** | Cob | VCB=6V, IE=0 f=1MHz | - | - | 40 | pF |

| | | | |
|---|---|---|---|
| **hFE(1) Classification :** | **M : 90-180;** | **L : 135-270;** | **K : 200-400** |
| **Marking** | **CSA 952 M** | **CSA 952 L** | **CSA 952 K** |

***PW=350us, duty cycle=2% pulsed**

# TO-92 Plastic Package

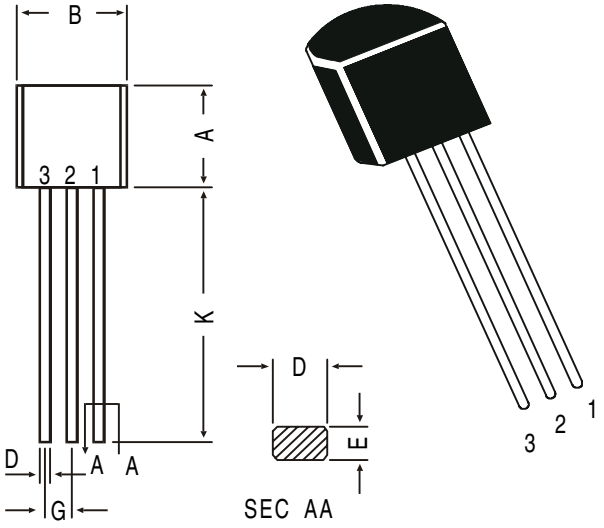


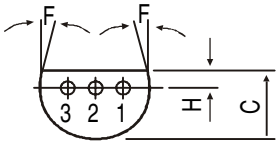


PIN CONFIGURATION
1. BASE
2. COLLECTOR
3. EMITTER

All diminsions in mm.

| DIM | MIN. | MAX. |
|---|---|---|
| A | 4.32 | 5.33 |
| B | 4.45 | 5.20 |
| C | 3.18 | 4.19 |
| D | 0.41 | 0.55 |
| E | 0.35 | 0.50 |
| F | 5 DEG | |
| G | 1.14 | 1.40 |
| H | 1.14 | 1.53 |
| K | 12.70 | — |

## TO-92 Transistors on Tape and Ammo Pack

MECHANICAL DATA

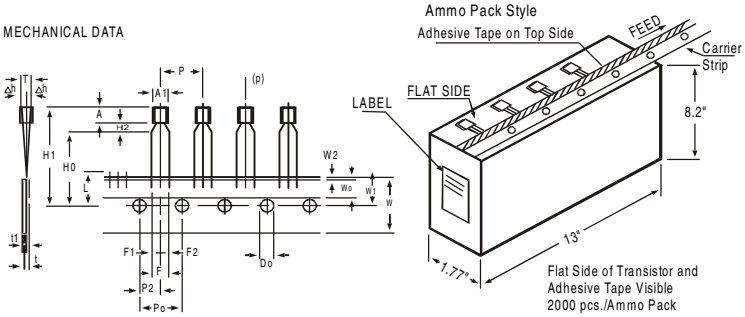


**All dimensions in mm unless specified otherwise**

| ITEM | SYMBOL | SPECIFICATION | | | | REMARKS |
|---|---|---|---|---|---|---|
| | | MIN. | NOM. | MAX. | TOL . | |
| BODY WIDTH | A1 | 4.0 | | 4.8 | | |
| BODY HEIGHT | A | 4.8 | | 5.2 | | |
| BODY THICKNESS | T | 3.9 | | 4.2 | | |
| PITCH OF COMPONENT | P | | 12.7 | | ±1 | |
| FEED HOLE PITCH | Po | | 12.7 | | ±0.3 | CUMULATIVE PITCH ERROR 1.0 mm/20 PITCH |
| FEED HOLE CENTRE TO COMPONENT CENTRE | P2 | | 6.35 | | ±0.4 | TO BE MEASURED AT BOTTOM OF CLINCH |
| DISTANCE BETWEEN OUTER LEADS | F | | 5.08 | | +0.6 -0.2 | |
| COMPONENT ALIGNMENT | △h | | 0 | 1 | | AT TOP OF BODY |
| TAPE WIDTH | W | | 18 | | ±0.5 | |
| HOLD-DOWN TAPE WIDTH | Wo | | 6 | | ±0.2 | |
| HOLE POSITION | W1 | | 9 | | +0.7 -0.5 | |
| HOLD-DOWN TAPE POSITION | W2 | | 0.5 | | ±0.2 | |
| LEAD WIRE CLINCH HEIGHT | Ho | | 16 | | ±0.5 | |
| COMPONENT HEIGHT | H1 | | | 23.25 | | |
| LENGTH OF SNIPPED LEADS | L | | | 11.0 | | |
| FEED HOLE DIAMETER | Do | | 4 | | ±0.2 | |
| TOTAL TAPE THICKNESS | t | | | 1.2 | | t1 0.3 - 0.6 |
| LEAD - TO - LEAD DISTANCEF1, | F2 | | 2.54 | | +0.4 -0.1 | |
| CLINCH HEIGHT | H2 | | | 3 | | |
| PULL - OUT FORCE | (P) | 6N | | | | |

**NOTES**
1. MAXIMUM ALIGNMENT DEVIATION BETWEEN LEADS NOT TO BE GREATER THAN 0.2 mm.
2. MAXIMUM NON-CUMULATIVE VARIATION BETWEEN TAPE FEED HOLES SHALL NOT EXCEED 1 mm IN 20 PITCHES.
3. HOLDDOWN TAPE NOT TO EXCEED BEYOND THE EDGE(S) OF CARRIER TAPE AND THERE SHALL BE NO EXPOSURE OF ADHESIVE.
4. NO MORE THAN 3 CONSECUTIVE MISSING COMPONENTS ARE PERMITTED.
5. A TAPE TRAILER, HAVING AT LEAST THREE FEED HOLES ARE REQUIRED AFTER THE LAST COMPONENT.
6. SPLICES SHALL NOT INTERFERE WITH THE SPROCKET FEED HOLES.

## Packing Detail

| PACKAGE | STANDARD PACK | | INNER CARTON BOX | | OUTER CARTON BOX | | |
|---|---|---|---|---|---|---|---|
| | Details | Net Weight/Qty | Size | Qty | Size | Qty | Gr Wt |
| TO-92 Bulk | 1K/polybag | 200 gm/1K pcs | 3" x 7.5" x 7.5" | 5.0K | 17" x 15" x 13.5" | 80.0K | 23 kgs |
| TO-92 T&A | 2K/ammo box | 645 gm/2K pcs | 12.5" x 8" x 1.8" | 2.0K | 17" x 15" x 13.5" | 32.0K | 12.5 kgs |

## Notes

## Disclaimer

The product information and the selection guides facilitate selection of the CDIL's Discrete Semiconductor Device(s) best suited for application in your product(s) as per your requirement. It is recommended that you completely review our Data Sheet(s) so as to confirm that the Device(s) meet functionality parameters for your application. The information furnished on the CDIL Web Site/CD is believed to be accurate and reliable. CDIL however, does not assume responsibility for inaccuracies or incomplete information. Furthermore, CDIL does not assume liability whatsoever, arising out of the application or use of any CDIL product; neither does it convey any license under its patent rights nor rights of others. These products are not designed for use in life saving/support appliances or systems. CDIL customers selling these products (either as individual Discrete Semiconductor Devices or incorporated in their end products), in any life saving/support appliances or systems or applications do so at their own risk and CDIL will not be responsible for any damages resulting from such sale(s).

CDIL strives for continuous improvement and reserves the right to change the specifications of its products without prior notice.

CDIL is a registered Trademark of
Continental Device India Limited
C-120 Naraina Industrial Area, New Delhi 110 028, India.
Telephone + 91-11-579 6150 Fax + 91-11-579 9569, 579 5290
e-mail sales@cdil.com www.cdil.com