Crystal LAN™ ISA Ethernet Controller

FEATURES

- **Single-Chip IEEE 802.3 Ethernet Controller with Direct ISA-Bus Interface**
- **Maximum Current Consumption = 55 mA (5V Supply)**
- **3 V Operation**
- **Industrial Temperature Range**
- **Comprehensive Suite of Software Drivers Available**
- **Efficient PacketPage™ Architecture Operates in I/O and Memory Space, and as DMA Slave**
- **Full Duplex Operation**
- **On-Chip RAM Buffers Transmit and Receive Frames**
- **10BASE-T Port with Analog Filters, Provides:**
  - — Automatic Polarity Detection and Correction
- **AUI Port for 10BASE2, 10BASE5 and 10BASE-F**
- **Programmable Transmit Features:**
  - — Automatic Re-transmission on Collision
  - — Automatic Padding and CRC Generation
- **Programmable Receive Features:**
  - — Stream Transfer™ for Reduced CPU Overhead
  - — Auto-Switch Between DMA and On-Chip Memory
  - — Early Interrupts for Frame Pre-Processing
  - — Automatic Rejection of Erroneous Packets
- **EEPROM Support for Jumperless Configuration**
- **Boot PROM Support for Diskless Systems**
- **Boundary Scan and Loopback Test**
- **LED Drivers for Link Status and LAN Activity**
- **Standby and Suspend Sleep Modes**

DESCRIPTION

The CS8900A is a low-cost Ethernet LAN Controller optimized for Industry Standard Architecture (ISA) Personal Computers. Its highly-integrated design eliminates the need for costly external components required by other Ethernet controllers. The CS8900A includes on-chip RAM, 10BASE-T transmit and receive filters, and a direct ISA-Bus interface with 24 mA Drivers.

In addition to high integration, the CS8900A offers a broad range of performance features and configuration-options. Its unique PacketPage architecture automatically adapts to changing network traffic patterns and available system resources. The result is increased system efficiency.

The CS8900A is available in a 100-pin TQFP package-ideally suited for small form-factor, cost-sensitive Ethernet applications. With the CS8900A, system engineers can design a complete Ethernet circuit that occupies less than 1.5 square inches (10 sq. cm) of board space.

ORDERING INFORMATION

CS8900A-CQ	0° to 70° C	5V	TQFP-100
CS8900A-IQ	-40° to 85° C	5V	TQFP-100
CS8900A-CQ3	0° to 70° C	3.3V	TQFP-100
CS8900A-IQ3	-40° to 85° C	3.3V	TQFP-100
CRD8900A-1			Evaluation Kit

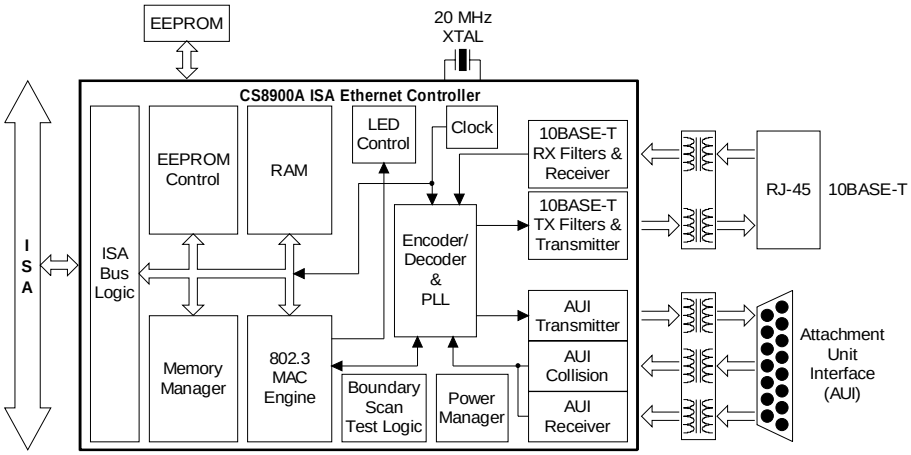

CIRRUS LOGIC PRODUCT DATA SHEET

Copyright © Cirrus Logic, Inc. 1999
(All Rights Reserved)

TABLE OF CONTENTS

1.0 INTRODUCTION 8
1.1 General Description 8
1.1.1 Direct ISA-Bus Interface 8
1.1.2 Integrated Memory 8
1.1.3 802.3 Ethernet MAC Engine 8
1.1.4 EEPROM Interface 8
1.1.5 Complete Analog Front End 8
1.2 System Applications 8
1.2.1 Motherboard LANs 8
1.2.2 Ethernet Adapter Cards 9
1.3 Key Features and Benefits 10
1.3.1 Very Low Cost 10
1.3.2 High Performance 10
1.3.3 Low Power and Low Noise 10
1.3.4 Complete Support 10
2.0 PIN DESCRIPTION 12
3.0 FUNCTIONAL DESCRIPTION 17
3.1 Overview 17
3.1.1 Configuration 17
3.1.2 Packet Transmission 17
3.1.3 Packet Reception 17
3.2 ISA Bus Interface 18
3.2.1 Memory Mode Operation 18
3.2.2 I/O Mode Operation 18
3.2.3 Interrupt Request Signals 18
3.2.4 DMA Signals 18
3.3 Reset and Initialization 19
3.3.1 Reset 19
3.3.1.1 External Reset, or ISA Reset 19
3.3.1.2 Power-Up Reset 19
3.3.1.3 Power-Down Reset 19
3.3.1.4 EEPROM Reset 19
3.3.1.5 Software Initiated Reset 19
3.3.1.6 Hardware (HW) Standby or Suspend 19
3.3.1.7 Sof tware (SW) Suspend 19
3.3.2 Allowing Time for Reset Operation 19
3.3.3 Bus Reset Considerations 19
3.3.4 Initialization 20
3.4 Configurations with EEPROM 21
3.4.1 EEPROM Interface 21
3.4.2 EEPROM Memory Organization 21
3.4.3 Reset Configuration Block 21
3.4.3.1 Reset Configuration Block Structure 21
3.4.3.2 Reset Configuration Block Header 21
3.4.3.3 Determining the EEPROM Type 21
3.4.3.4 Checking EEPROM for presence of Reset Configuration Block 21
3.4.3.5 Determining Number of Bytes in the Reset Configuration Block 22
3.4.4 Groups of Configuration Data 22
3.4.4.1 Group Header 23
3.4.5 Reset Configuration Block Checksum 23
3.4.6 EEPROM Example 23
3.4.7 EEPROM Read-out 23

3.4.7.1 Determining EEPROM Size 23
3.4.7.2 Loading Configuration Data 24
3.4.8 EEPROM Read-out Completion 24
3.5 Programming the EEPROM 24
3.5.1 EEPROM Commands 24
3.5.2 EEPROM Command Execution 24
3.5.3 Enabling Access to the EEPROM 25
3.5.4 Writing and Erasing the EEPROM 25
3.6 Boot PROM Operation 25
3.6.1 Accessing the Boot PROM 25
3.6.2 Configuring the CS8900A for Boot PROM Operation 25
3.7 Low-Power Modes 26
3.7.1 Hardware Standby 26
3.7.2 Hardware Suspend 26
3.7.3 Software Suspend 27
3.8 LED Outputs 28
3.8.0.1 LANLED 28
3.8.0.2 LINKLED or HC0 28
3.8.0.3 BSTATUS or HC1 28
3.8.1 LED Connection 28
3.9 Media Access Control 28
3.9.1 Overview 28
3.9.2 Frame Encapsulation and Decapsulation 29
3.9.2.1 Transmission 29
3.9.2.2 Reception 29
3.9.2.3 Enforcing Minimum Frame Size 29
3.9.3 Transmit Error Detection and Handling 30
3.9.3.1 Loss of Carrier 30
3.9.3.2 SQE Error 30
3.9.3.3 Out-of-Window (Late) Collision 30
3.9.3.4 Jabber Error 30
3.9.3.5 Transmit Collision 30
3.9.3.6 Transmit Underrun 30
3.9.4 Receive Error Detection and Handling 31
3.9.4.1 CRC Error 31
3.9.4.2 Runt Frame 31
3.9.4.3 Extra Data 31
3.9.4.4 Dribble Bits and Alignment Error 31
3.9.5 Media Access Management 31
3.9.5.1 Collision Avoidance 31
3.9.5.2 Two-Part Deferral 31
3.9.5.3 Simple Deferral 32
3.9.5.4 Collision Resolution 32
3.9.5.5 Normal Collisions 32
3.9.5.6 Late Collisions 33
3.9.5.7 Backoff 33
3.9.5.8 Standard Backoff 33
3.9.5.9 Modified Backoff 33
3.9.5.10 SQE Test 33
3.10 Encoder/Decoder (ENDEC) 34
3.10.1 Encoder 34
3.10.2 Carrier Detection 34
3.10.3 Clock and Data Recovery 34

3.10.4 Interface Selection 35
3.10.4.1 10BASE-T Only 35
3.10.4.2 AUI Only 35
3.10.4.3 Auto-Select 35
3.11 10BASE-T Transceiver 35
3.11.1 10BASE-T Filters 35
3.11.2 Transmitter 36
3.11.3 Receiver 36
3.11.3.1 Squelch Circuit 36
3.11.3.2 Extended Range 36
3.11.4 Link Pulse Detection 36
3.11.5 Receive Polarity Detection and Correction 37
3.11.6 Collision Detection 37
3.12 Attachment Unit Interface (AUI) 37
3.12.1 AUI Transmitter 37
3.12.2 AUI Receiver 38
3.12.3 Collision Detection 38
3.13 External Clock Oscillator 38
4.0 PACKETPAGE ARCHITECTURE 39
4.1 PacketPage Overview 39
4.1.1 Integrated Memory 39
4.1.2 Bus Interface Registers 39
4.1.3 Status and Control Registers 39
4.1.4 Initiate Transmit Registers 39
4.1.5 Address Filter Registers 39
4.1.6 Receive and Transmit Frame Locations 39
4.2 PacketPage Memory Map 40
4.3 Bus Interface Registers 42
4.3.1 Product Identification Code 42
4.3.2 I/O Base Address 42
4.3.3 Interrupt Number 43
4.3.4 DMA Channel Number 43
4.3.5 DMA Start of Frame 44
4.3.6 DMA Frame Count 44
4.3.7 RxDMA Byte Count 44
4.3.8 Memory Base Address 44
4.3.9 Boot PROM Base Address 45
4.3.10 Boot PROM Address Mask 45
4.3.11 EEPROM Command 46
4.3.12 EEPROM Data 46
4.3.13 Receive Frame Byte Counter 46
4.4 Status and Control Registers 47
4.4.1 Configuration and Control Registers 47
4.4.2 Status and Event Registers 47
4.4.3 Status and Control Bit Definitions 47
4.4.3.1 Act-Once Bits 48
4.4.3.2 Temporal Bits 48
4.4.3.3 Interrupt Enable Bits and Events 48
4.4.3.4 Accept Bits 48
4.4.4 Status and Control Register Summary 49
4.4.5 Register 0: Interrupt Status Queue 52
4.4.6 Register 3: Receiver Configuration 53
4.4.7 Register 4: Receiver Event 54

4.4.8 Register 5: Receiver Control 55
4.4.9 Register 7: Transmit Configuration 56
4.4.10 Register 8: Transmitter Event 57
4.4.11 Register 9: Transmit Command Status 58
4.4.12 Register B: Buffer Configuration 59
4.4.13 Register C: Buffer Event 60
4.4.14 Register 10: Receiver Miss Counter 61
4.4.15 Register 10: Transmit Collision Counter 62
4.4.16 Register 13: Line Control 63
4.4.17 Register 14: Line Status 64
4.4.18 Register 15: Self Control 65
4.4.19 Register 16: Self Status 66
4.4.20 Register 17: Bus Control 67
4.4.21 Register 18: Bus Status 68
4.4.22 Register 19: Test Control 69
4.4.23 Register 1C: AUI Time Domain Reflectometer 70
4.5 Initiate Transmit Registers 71
4.5.1 Transmit Command Request - TxCMD 71
4.5.2 Transmit Length 71
4.6 Address Filter Registers 72
4.6.1 Logical Address Filter (hash table) 72
4.6.2 Individual Address (IEEE address) 72
4.7 Receive and Transmit Frame Locations 73
4.7.1 Receive PacketPage Locations 73
4.7.2 Transmit Locations 73
4.8 Eight and Sixteen Bit Transfers 73
4.8.1 Transferring Odd-Byte-Aligned Data 74
4.8.2 Random Access to CS8900A Memory 74
4.9 Memory Mode Operation 74
4.9.1 Accesses in Memory Mode 74
4.9.2 Configuring the CS8900A for Memory Mode 74
4.9.3 Basic Memory Mode Transmit 75
4.9.4 Basic Memory Mode Receive 75
4.9.5 Polling the CS8900A in Memory Mode 76
4.10 I/O Space Operation 76
4.10.1 Receive/Transmit Data Ports 0 and 1 76
4.10.2 TxCMD Port 76
4.10.3 TxLength Port 76
4.10.4 Interrupt Status Queue Port 76
4.10.5 PacketPage Pointer Port 76
4.10.6 PacketPage Data Ports 0 and 1 77
4.10.7 I/O Mode Operation 77
4.10.8 Basic I/O Mode Transmit 77
4.10.9 Basic I/O Mode Receive 77
4.10.10 Accessing Internal Registers 78
4.10.11 Polling the CS8900A in I/O Mode 78
5.0 OPERATION 79
5.1 Managing Interrupts and Servicing the Interrupt Status Queue 79
5.2 Basic Receive Operation 79
5.2.0.1 Overview 79
5.2.1 Terminology: Packet, Frame, and Transfer 81
5.2.1.1 Packet 81
5.2.1.2 Frame 81

5.2.1.3 Transfer 81
5.2.2 Receive Configuration 81
5.2.2.1 Configuring the Physical Interface 81
5.2.2.2 Choosing which Frame Types to Accept 81
5.2.2.3 Selecting which Events Cause Interrupts 82
5.2.2.4 Choosing How to Transfer Frames 82
5.2.3 Receive Frame Pre-Processing 83
5.2.3.1 Destination Address Filtering 83
5.2.3.2 Early Interrupt Generation 84
5.2.3.3 Acceptance Filtering 84
5.2.3.4 Normal Interrupt Generation 84
5.2.4 Held vs. DMAed Receive Frames 84
5.2.5 Buffering Held Receive Frames 84
5.2.6 Transferring Held Receive Frames 86
5.2.7 Receive Frame Visibility 86
5.2.8 Example of Memory Mode Receive Operation 86
5.2.9 Receive Frame Byte Counter 87
5.3 Receive Frame Address Filtering 87
5.3.0.1 Individual Address Frames 88
5.3.0.2 Multicast Frames 88
5.3.0.3 Broadcast Frames 88
5.3.1 Configuring the Destination Address Filter 88
5.3.2 Hash Filter 89
5.3.2.1 Hash Filter Operation 89
5.3.3 Broadcast Frame Hashing Exception 89
5.4 Receive DMA 90
5.4.1 Overview 90
5.4.2 Configuring the CS8900A for DMA Operation 90
5.4.3 DMA Receive Buffer Size 90
5.4.4 Receive-DMA-Only Operation 91
5.4.5 Committing Buffer Space to a DMAed Frame 92
5.4.6 DMA Buffer Organization 92
5.4.7 RxDMAFrame Bit 92
5.4.8 Receive DMA Example Without Wrap-Around 92
5.4.9 Receive DMA Operation for RxDMA-Only Mode 92
5.5 Auto-Switch DMA 93
5.5.1 Overview 93
5.5.2 Configuring the CS8900A for Auto-Switch DMA 94
5.5.3 Auto-Switch DMA Operation 94
5.5.4 DMA Channel Speed vs. Missed Frames 95
5.5.5 Exit From DMA 95
5.5.6 Auto-Switch DMA Example 96
5.6 StreamTransfer 96
5.6.1 Overview 96
5.6.2 Configuring the CS8900A for StreamTransfer 96
5.6.3 StreamTransfer Operation 96
5.6.4 Keeping StreamTransfer Mode Active 96
5.6.5 Example of StreamTransfer 98
5.6.6 Receive DMA Summary 98
5.7 Transmit Operation 99
5.7.1 Overview 99
5.7.2 Transmit Configuration 99
5.7.2.1 Configuring the Physical Interface 99

5.7.2.2 Selecting which Events Cause Interrupts 99
5.7.3 Changing the Configuration 99
5.7.4 Enabling CRC Generation and Padding 100
5.7.5 Individual Packet Transmission 100
5.7.6 Transmit in Poll Mode 101
5.7.7 Transmit in Interrupt Mode 101
5.7.8 Completing Transmission 103
5.7.9 Rdy4TxNOW vs. Rdy4Tx 103
5.7.10 Committing Buffer Space to a Transmit Frame 103
5.7.11 Transmit Frame Length 105
5.8 Full duplex Considerations 105
5.9 Auto-Negotiation Considerations 105
6.0 TEST MODES 106
6.0.1 Loopback & Collision Diagnostic Tests 106
6.0.2 Internal Tests 106
6.0.3 External Tests 106
6.0.4 Loopback Tests 106
6.0.5 10BASE-T Loopback and Collision Tests 106
6.0.6 AUI Loopback and Collision Tests 106
6.1 Boundary Scan 107
6.1.1 Output Cycle 107
6.1.2 Input Cycle 107
6.1.3 Continuity Cycle 108
7.0 CHARACTERISTICS/SPECIFICATIONS 111
7.1 ABSOLUTE MAXIMUM RATINGS 111
7.2 RECOMMENDED OPERATING CONDITIONS 111
7.3 DC CHARACTERISTICS 111
7.4 SWITCHING CHARACTERISTICS 113
7.5 10BASE-T WIRING 120
7.6 AUI WIRING 121
7.7 QUARTZ CRYSTAL REQUIREMENTS 121
8.0 PHYSICAL DIMENSIONS 122
9.0 GLOSSARY OF TERMS 123
9.1 Acronyms 123
9.2 Definitions 124
9.3 Acronyms Specific to the CS8900A 125
9.4 Terms Specific to the CS8900A 125
9.5 Suffixes Specific to the CS8900A. 126

1.0 INTRODUCTION

1.1 General Description

The CS8900A is a true single-chip, full-duplex, Ethernet solution, incorporating all of the analog and digital circuitry needed for a complete Ethernet circuit. Major functional blocks include: a direct ISA-bus interface; an 802.3 MAC engine; integrated buffer memory; a serial EEPROM interface; and a complete analog front end with both 10BASE-T and AUI.

1.1.1 Direct ISA-Bus Interface

Included in the CS8900A is a direct ISA-bus interface with full 24 mA drive capability. Its configuration options include a choice of four interrupts and three DMA channels (one of each selected during initialization). In Memory Mode, it supports Standard or Ready Bus cycles without introducing additional wait states.

1.1.2 Integrated Memory

The CS8900A incorporates a 4-Kbyte page of on-chip memory, eliminating the cost and board area associated with external memory chips. Unlike most other Ethernet controllers, the CS8900A buffers entire transmit and receive frames on chip, eliminating the need for complex, inefficient memory management schemes. In addition, the CS8900A operates in either Memory space, I/O space, or with external DMA controllers, providing maximum design flexibility.

1.1.3 802.3 Ethernet MAC Engine

The CS8900A's Ethernet Media Access Control (MAC) engine is fully compliant with the IEEE 802.3 Ethernet standard (ISO/IEC 8802-3, 1993), and supports full-duplex operation. It handles all aspects of Ethernet frame transmission and reception, including: collision detection, preamble generation and detection, and CRC generation and test. Programmable MAC features include automatic retransmission on collision, and automatic padding of transmitted frames.

1.1.4 EEPROM Interface

The CS8900A provides a simple and efficient serial EEPROM interface that allows configuration information to be stored in an optional EEPROM, and then loaded automatically at power-up. This eliminates the need for costly and cumbersome switches and jumpers.

1.1.5 Complete Analog Front End

The CS8900A's analog front end incorporates a Manchester encoder/decoder, clock recovery circuit, 10BASE-T transceiver, and complete Attachment Unit Interface (AUI). It provides manual and automatic selection of either 10BASE-T or AUI, and offers three on-chip LED drivers for link status, bus status, and Ethernet line activity.

The 10BASE-T transceiver includes drivers, receivers, and analog filters, allowing direct connection to low-cost isolation transformers. It supports 100, 120, and 150 Ω shielded and unshielded cables, extended cable lengths, and automatic receive polarity reversal detection and correction.

The AUI port provides a direct interface to 10BASE-2, 10BASE-5 and 10BASE-FL networks, and is capable of driving a full 50-meter AUI cable.

1.2 System Applications

The CS8900A is designed to work well in either motherboard or adapter applications.

1.2.1 Motherboard LANs

The CS8900A requires the minimum number of external components needed for a full Ethernet node. Its small-footprint package and high level of integration allow System Engineers to design a complete Ethernet circuit that occupies as little as 1.5 square inches of PCB area (Figure 1). In addition, the CS8900A's power-saving features and CMOS design make it a perfect fit for power-sensi-

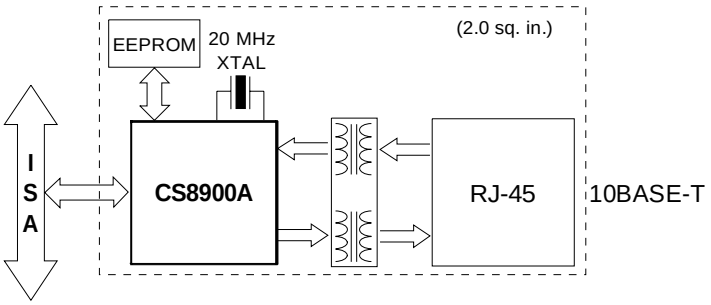

Figure 1. Complete Ethernet Motherboard Solution

tive portable and desktop PCs. Motherboard design options include:

- An EEPROM can be used to store node-specific information, such as the Ethernet Individual Address and node configuration.
- The 20 MHz crystal oscillator may be replaced by a 20 MHz clock signal.

1.2.2 Ethernet Adapter Cards

The CS8900A's highly efficient PacketPage architecture, with StreamTransfer™ and Auto-Switch DMA options, make it an excellent choice for high-performance, low-cost ISA adapter cards (Figure 2). The CS8900A's wide range of configuration options and performance features allow engineers to design Ethernet solutions that meet their particular system requirements. Adapter card design options include:

- A Boot PROM can be added to support diskless applications.
- The 10BASE-T transmitter and receiver impedance can be adjusted to support 100, 120, or 150 Ohm twisted pair cables.
- An external Latchable-Address-bus decode circuit can be added to operate the CS8900A in Upper-Memory space.
- On-chip LED ports can be used for either optional LEDs, or as programmable outputs.

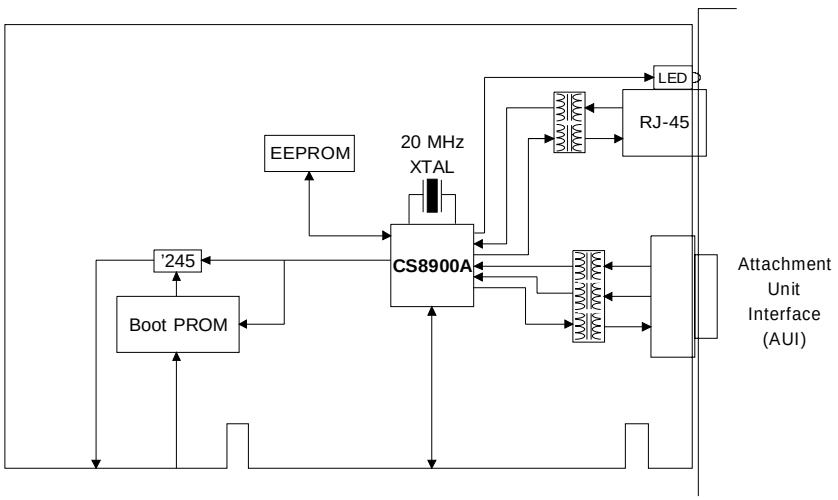

Figure 2. Full-Featured ISA Adapter Solution

1.3 Key Features and Benefits

1.3.1 Very Low Cost

The CS8900A is designed to provide the lowest-cost Ethernet solution available for embedded applications, portable motherboards, non-ISA bus systems and adapter cards. Cost-saving features include:

- Integrated RAM eliminates the need for expensive external memory chips.
- On-chip 10BASE-T filters allow designers to use simple isolation transformers instead of more costly filter/transformer packages.
- The serial EEPROM port, used for configuration and initialization, eliminates the need for expensive switches and jumpers.
- The CS8900A is designed to be used on a 2-layer circuit board instead of a more expensive multilayer board.
- The 8900A-based solution offers the smallest footprint available, saving valuable printed circuit board area.
- A set of certified software drivers is available at no charge, eliminating the need for costly software development.

1.3.2 High Performance

The CS8900A is a full 16-bit Ethernet controller designed to provide optimal system performance by minimizing time on the ISA bus and CPU overhead per frame. It offers equal or superior performance for less money when compared to other Ethernet controllers. The CS8900A's PacketPage architecture allows software to select whichever access method is best suited to each particular CPU/ISA-bus configuration. When compared to older I/O-space designs, PacketPage is faster, simpler and more efficient.

To boost performance further, the CS8900A includes several key features that increase throughput and lower CPU overhead, including:

- StreamTransfer cuts up to 87% of interrupts to the host CPU during large block transfers.
- Auto-Switch DMA allows the CS8900A to maximize throughput while minimizing missed frames.
- Early interrupts allow the host to preprocess incoming frames.
- On-chip buffering of full frames cuts the amount of host bandwidth needed to manage Ethernet traffic.

1.3.3 Low Power and Low Noise

For low power needs, the CS8900A offers three power-down options: Hardware Standby, Hardware Suspend, and Software Suspend. In Standby mode, the chip is powered down with the exception of the 10BASE-T receiver, which is enabled to listen for link activity. In either Hardware or Software Suspend mode, the receiver is disabled and power consumption drops to the micro-ampere range.

In addition, the CS8900A has been designed for very low noise emission, thus shortening the time required for EMI testing and qualification.

1.3.4 Complete Support

The CS8900A comes with a suite of software drivers for immediate use with most industry standard network operating systems. In addition, complete evaluation kits and manufacturing packages are available, significantly reducing the cost and time required to produce new Ethernet products.

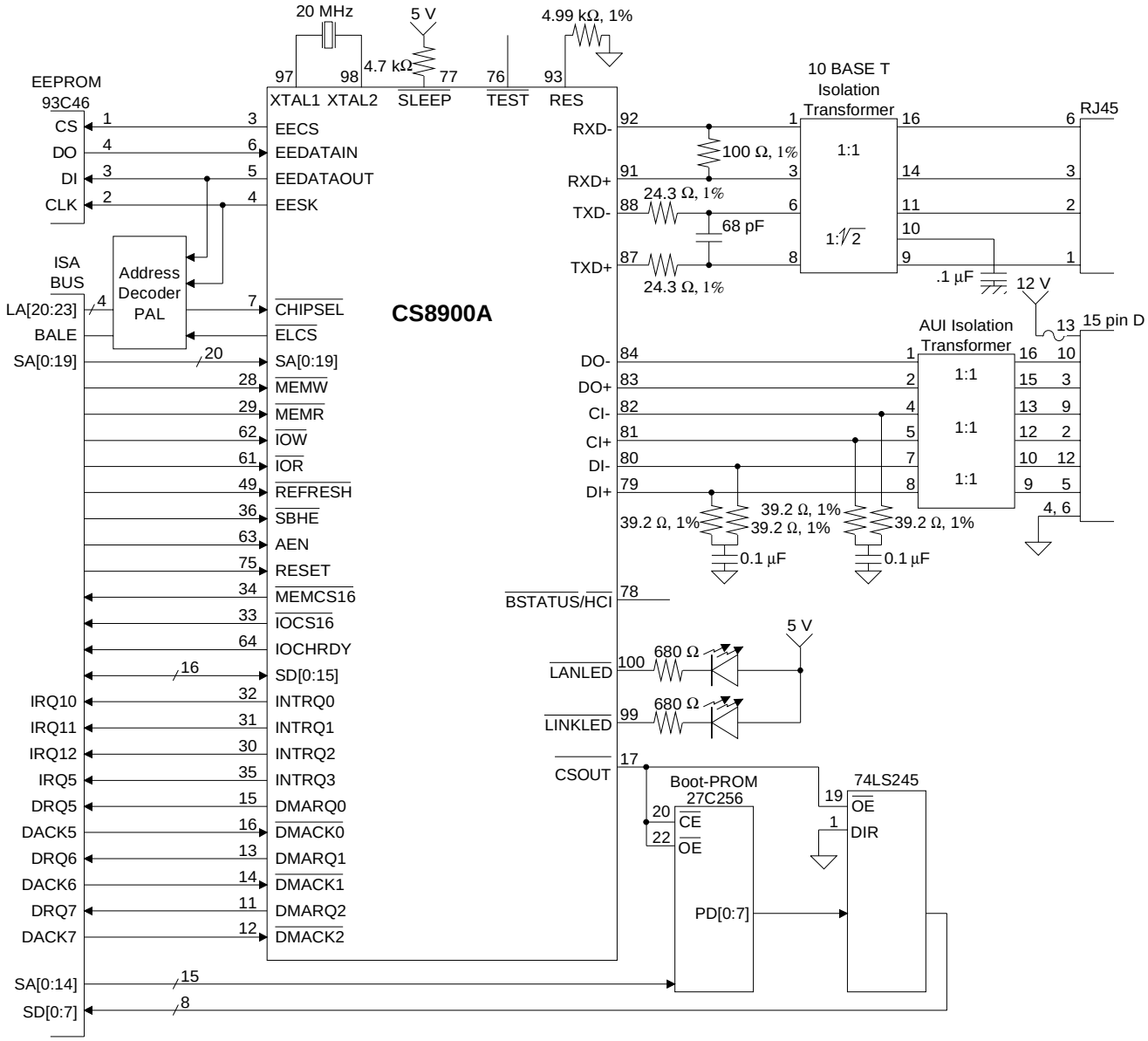

Figure 3. Typical Connection Diagram

2.0 PIN DESCRIPTION

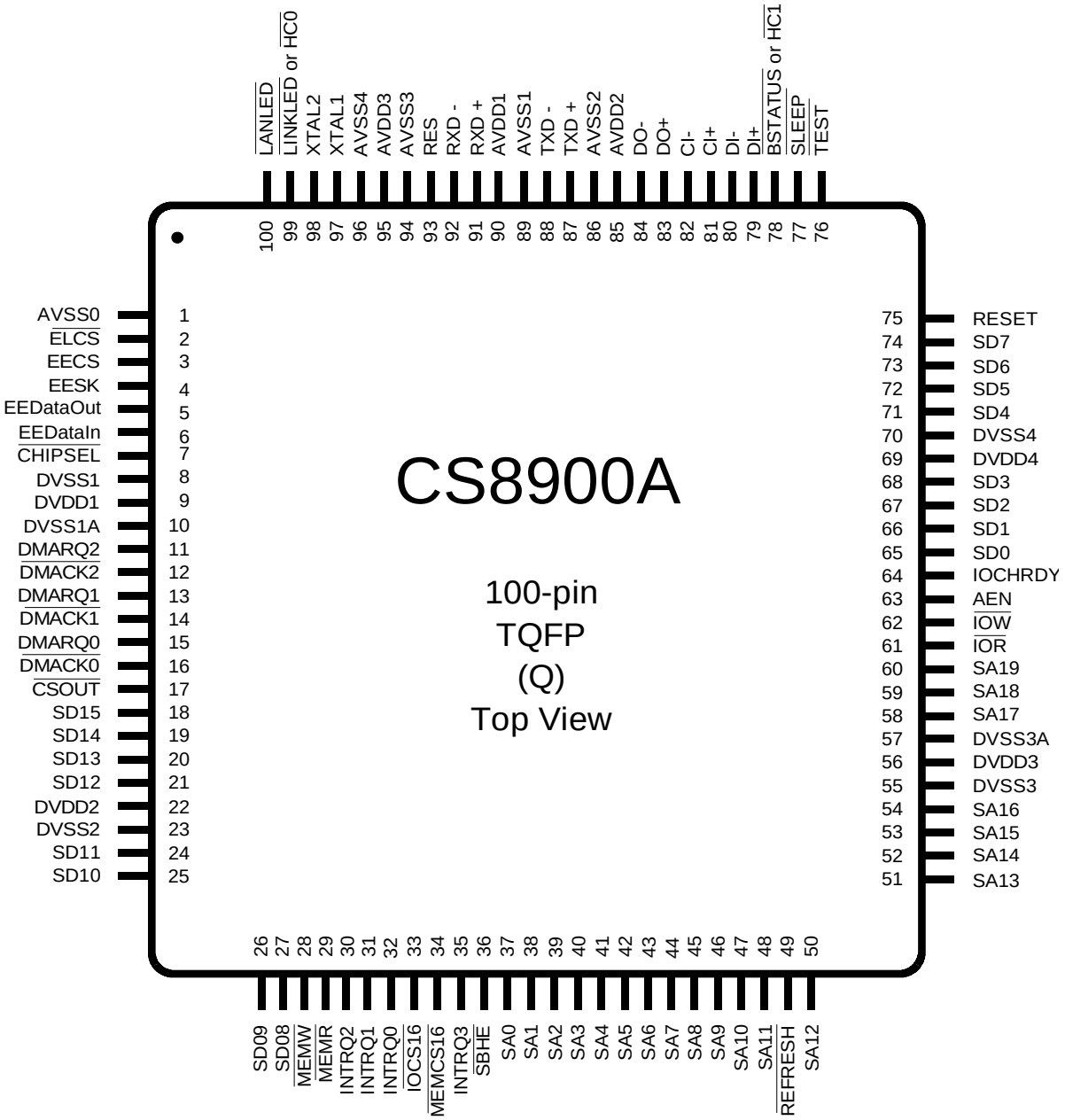

ISA Bus Interface

SA[0:19] - System Address Bus, Input PINS 37-48, 50-54, 58-60.

Lower 20 bits of the 24-bit System Address Bus used to decode accesses to CS8900A I/O and Memory space, and attached Boot PROM. SA0-SA15 are used for I/O Read and Write operations. SA0-SA19 are used in conjunction with external decode logic for Memory Read and Write operations.

SD[0:15] - System Data Bus, Bi-Directional with 3-State Output PINS 65-68, 71-74, 27-24, 21-18.

Bi-directional 16-bit System Data Bus used to transfer data between the CS8900A and the host.

RESET - Reset, Input PIN 75.

Active-high asynchronous input used to reset the CS8900A. Must be stable for at least 400 ns before the CS8900A recognizes the signal as a valid reset.

AEN - Address Enable, Input PIN 63.

When $\overline{\text{TEST}}$ is high, this active-high input indicates to the CS8900A that the system DMA controller has control of the ISA bus. When AEN is high, the CS8900A will not perform slave I/O space operations. When $\overline{\text{TEST}}$ is low, this pin becomes the shift clock input for the Boundary Scan Test. AEN should be inactive when performing an IO or memory access and it should be active during a DMA cycle.

$\overline{\text{MEMR}}$ - Memory Read, Input PIN 29.

Active-low input indicates that the host is executing a Memory Read operation.

$\overline{\text{MEMW}}$ - Memory Write, Input PIN 28.

Active-low input indicates that the host is executing a Memory Write operation.

$\overline{\text{MEMCS16}}$ - Memory Chip Select 16-bit, Open Drain Output PIN 34.

Open-drain, active-low output generated by the CS8900A when it recognizes an address on the ISA bus that corresponds to its assigned Memory space (CS8900A must be in Memory Mode with the MemoryE bit (Register 17, BusCTL, Bit A) set for $\overline{\text{MEMCS16}}$ to go active). 3-Stated when not active.

$\overline{\text{REFRESH}}$ - Refresh, Input PIN 49.

Active-low input indicates to the CS8900A that a DRAM refresh cycle is in progress. When $\overline{\text{REFRESH}}$ is low, $\overline{\text{MEMR}}$, $\overline{\text{MEMW}}$, $\overline{\text{IOR}}$, $\overline{\text{IOW}}$, $\overline{\text{DMACK0}}$, $\overline{\text{DMACK1}}$, and $\overline{\text{DMACK2}}$ are ignored.

$\overline{\text{IOR}}$ - I/O Read, Input PIN 61.

When $\overline{\text{IOR}}$ is low and a valid address is detected, the CS8900A outputs the contents of the selected 16-bit I/O register onto the System Data Bus. $\overline{\text{IOR}}$ is ignored if $\overline{\text{REFRESH}}$ is low.

$\overline{\text{IOW}}$ - I/O Write, Input PIN 62.

When $\overline{\text{IOW}}$ is low and a valid address is detected, the CS8900A writes the data on the System Data Bus into the selected 16-bit I/O register. $\overline{\text{IOW}}$ is ignored if $\overline{\text{REFRESH}}$ is low.

$\overline{\text{IOCS16}}$ - I/O Chip Select 16-bit, Open Drain Output PIN 33.

Open-drain, active-low output generated by the CS8900A when it recognizes an address on the ISA bus that corresponds to its assigned I/O space. 3-Stated when not active.

IOCHRDY - I/O Channel Ready, Open Drain Output PIN 64.

When driven low, this open-drain, active-high output extends I/O Read and Memory Read cycles to the CS8900A. This output is functional when the IOCHRDYE bit in the Bus Control register (Register 17) is clear. This pin is always 3-Stated when the IOCHRDYE bit is set.

$\overline{\text{SBHE}}$ - System Bus High Enable, Input PIN 36.

Active-low input indicates a data transfer on the high byte of the System Data Bus (SD8-SD15). After a hardware or a software reset, provide a HIGH to LOW and then LOW to HIGH transition on $\overline{\text{SBHE}}$ signal before any IO or memory access is done to the CS8900A.

INTRQ[0:2] - Interrupt Request, 3-State PINS 30-32, 35.

Active-high output indicates the presence of an interrupt event. Interrupt Request goes low once the Interrupt Status Queue (ISQ) is read as all 0's. Only one Interrupt Request output is used (one is selected during configuration). All non-selected Interrupt Request outputs are placed in a high-impedance state. (Section 3.2 on page 18 and Section 5.1 on page 79.)

DMARQ[0:2] - DMA Request, 3-State PINS 11, 13, and 15.

Active-high, 3-Stateable output used by the CS8900A to request a DMA transfer. Only one DMA Request output is used (one is selected during configuration). All non-selected DMA Request outputs are placed in a high-impedance state.

$\overline{\text{DMACK}}$[0:2] - DMA Acknowledge, Input PINS 12, 14, and 16.

Active-low input indicates acknowledgment by the host of the corresponding DMA Request output.

$\overline{\text{CHIPSEL}}$ - Chip Select, Input PIN 7.

Active-low input generated by external Latchable Address bus decode logic when a valid memory address is present on the ISA bus. If Memory Mode operation is not needed, $\overline{\text{CHIPSEL}}$ should be tied low. The $\overline{\text{CHIPSEL}}$ is ignored for IO and DMA mode of the CS8900A.

EEPROM and Boot PROM Interface

EESK - EEPROM Serial Clock, PIN 4.

Serial clock used to clock data into or out of the EEPROM.

EECS - EEPROM Chip Select, PIN 3.

Active-high output used to select the EEPROM.

EEDataIn - EEPROM Data In, Input Internal Weak Pullup PIN 6.

Serial input used to receive data from the EEPROM. Connects to the DO pin on the EEPROM. EEDataIn is also used to sense the presence of the EEPROM.

$\overline{\text{ELCS}}$ - External Logic Chip Select, Internal Weak Pullup PIN 2.

Bi-directional signal used to configure external Latchable Address (LA) decode logic. If external LA decode logic is not needed, $\overline{\text{ELCS}}$ should be tied low.

EEDataOut - EEPROM Data Out,PIN 5.

Serial output used to send data to the EEPROM. Connects to the DI pin on the EEPROM. When $\overline{\text{TEST}}$ is low, this pin becomes the output for the Boundary Scan Test.

$\overline{\text{CSOUT}}$ - Chip Select for External Boot PROM, PIN 17.

Active-low output used to select an external Boot PROM when the CS8900A decodes a valid Boot PROM memory address.

10BASE-T Interface

TXD+/TXD- - 10BASE-T Transmit, Differential Output Pair PINS 87 and 88.

Differential output pair drives 10 Mb/s Manchester-encoded data to the 10BASE-T transmit pair.

RXD+/RXD- - 10BASE-T Receive, Differential Input Pair PINS 91 and 92.

Differential input pair receives 10 Mb/s Manchester-encoded data from the 10BASE-T receive pair.

Attachment Unit Interface (AUI)

DO+/DO- - AUI Data Out, Differential Output Pair PINS 83 and 84.

Differential output pair drives 10 Mb/s Manchester-encoded data to the AUI transmit pair.

DI+/DI- - AUI Data In, Differential Input Pair PINS 79 and 80.

Differential input pair receives 10 Mb/s Manchester-encoded data from the AUI receive pair.

CI+/CI- - AUI Collision In, Differential Input Pair PINS 81 and 82.

Differential input pair connects to the AUI collision pair. A collision is indicated by the presence of a 10 MHz ± 15% signal with duty cycle no worse than 60/40.

General Pins

XTAL[1:2] - Crystal, Input/Output PINS 97 and 98.

A 20 MHz crystal should be connected across these pins. If a crystal is not used, a 20 MHz signal should be connected to XTAL1 and XTAL2 should be left open. (See Section 7.3 on page 111 and Section 7.7 on page 121.)

$\overline{\text{SLEEP}}$ - Hardware Sleep, Input Internal Weak Pullup PIN 77.

Active-low input used to enable the two hardware sleep modes: Hardware Suspend and Hardware Standby. (See Section 3.7 on page 26.)

$\overline{\text{LINKLED}}$ or $\overline{\text{HC0}}$ - Link Good LED or Host Controlled Output 0, Open Drain Output PIN 99.

When the HCE0 bit of the Self Control register (Register 15) is clear, this active-low output is low when the CS8900A detects the presence of valid link pulses. When the HC0E bit is set, the host may drive this pin low by setting the HCBO in the Self Control register.

$\overline{\text{BSTATUS}}$ or $\overline{\text{HC1}}$ - Bus Status or Host Controlled Output 1, Open Drain Output PIN 78.

When the HC1E bit of the Self Control register (Register 15) is clear, this active-low output is low when receive activity causes an ISA bus access. When the HC1E bit is set, the host may drive this pin low by setting the HCB1 in the Self Control register.

$\overline{\text{LANLED}}$ - LAN Activity LED, Open Drain Output PIN 100.

During normal operation, this active-low output goes low for 6 ms whenever there is a receive packet, a transmit packet, or a collision. During Hardware Standby mode, this output is driven low when the receiver detects network activity.

$\overline{\text{TEST}}$ - Test Enable, Input Internal Weak Pullup PIN 76.

Active-low input used to put the CS8900A in Boundary Scan Test mode. For normal operation, this pin should be high.

RES - Reference Resistor, Input PIN 93.

This input should be connected to a 4.99KΩ ± 1% resistor needed for biasing of internal analog circuits.

DVDD[1:4] - Digital Power, Power PINS 9, 22, 56, and 69.

Provides 5 V ± 5% power to the digital circuits of the CS8900A.

DVSS[1:4} and DVSS1A, DVSS3A - Digital Ground, Ground PINS 8, 10, 23, 55, 57, and 70.

Provides ground reference (0 V) to the digital circuits of the CS8900A.

AVDD[1:3] - Analog Power, Power PINS 90, 85, and 95.

Provides 5 V ± 5% power to the analog circuits of the CS8900A.

AVSS[0:4] - Analog Ground, Ground PINS 1, 89, 86, 94, 96.

Provide ground reference (0 V) to the analog circuits of the CS8900A.

3.0 FUNCTIONAL DESCRIPTION

3.1 Overview

During normal operation, the CS8900A performs two basic functions: Ethernet packet transmission and reception. Before transmission or reception is possible, the CS8900A must be configured.

3.1.1 Configuration

The CS8900A must be configured for packet transmission and reception at power-up or reset. Various parameters must be written into its internal Configuration and Control registers such as Memory Base Address; Ethernet Physical Address; what frame types to receive; and which media interface to use. Configuration data can either be written to the CS8900A by the host (across the ISA bus), or loaded automatically from an external EEPROM. Operation can begin after configuration is complete.

Section 3.3 on page 19 and Section 3.4 on page 21 describe the configuration process in detail. Section 4.4 on page 47 provides a detailed description of the bits in the Configuration and Control Registers.

3.1.2 Packet Transmission

Packet transmission occurs in two phases. In the first phase, the host moves the Ethernet frame into the CS8900A's buffer memory. The first phase begins with the host issuing a Transmit Command. This informs the CS8900A that a frame is to be transmitted and tells the chip when to start transmission (i.e. after 5, 381, 1021 or all bytes have been transferred) and how the frame should be sent (i.e. with or without CRC, with or without pad bits, etc.). The Host follows the Transmit Command with the Transmit Length, indicating how much buffer space is required. When buffer space is available, the host writes the Ethernet frame into the CS8900A's internal memory, either as a Memory or I/O space operation.

In the second phase of transmission, the CS8900A converts the frame into an Ethernet packet then transmits it onto the network. The second phase begins with the CS8900A transmitting the preamble and Start-of-Frame delimiter as soon as the proper number of bytes has been transferred into its transmit buffer (5, 381, 1021 bytes or full frame, depending on configuration). The preamble and Start-of-Frame delimiter are followed by the Destination Address, Source Address, Length field and LLC data (all supplied by the host). If the frame is less than 64 bytes, including CRC, the CS8900A adds pad bits if configured to do so. Finally, the CS8900A appends the proper 32-bit CRC value.

The Section 5.7 on page 99 provides a detailed description of packet transmission.

3.1.3 Packet Reception

Like packet transmission, packet reception occurs in two phases. In the first phase, the CS8900A receives an Ethernet packet and stores it in on-chip memory. The first phase of packet reception begins with the receive frame passing through the analog front end and Manchester decoder where Manchester data is converted to NRZ data. Next, the preamble and Start-of-Frame delimiter are stripped off and the receive frame is sent through the address filter. If the frame's Destination Address matches the criteria programmed into the address filter, the packet is stored in the CS8900A's internal memory. The CS8900A then checks the CRC, and depending on the configuration, informs the processor that a frame has been received.

In the second phase, the host transfers the receive frame across the ISA bus and into host memory. Receive frames can be transferred as Memory space operations, I/O space operations, or as DMA operations using host DMA. Also, the CS8900A provides the capability to switch between Memory or I/O operation and DMA operation by using Auto-Switch DMA and StreamTransfer.

The Section 5.2 on page 79 through Section 5.6 on page 96 provide a detailed description of packet reception.

3.2 ISA Bus Interface

The CS8900A provides a direct interface to ISA buses running at clock rates from 8 to 11 MHz. Its on-chip bus drivers are capable of delivering 24 mA of drive current, allowing the CS8900A to drive the ISA bus directly, without added external "glue logic".

The CS8900A is optimized for 16-bit data transfers, operating in either Memory space, I/O space, or as a DMA slave.

Note that ISA-bus operation below 8 MHz should use the CS8900A's Receive DMA mode to minimize missed frames. See Section 5.4 on page 90 for a description of Receive DMA operation.

3.2.1 Memory Mode Operation

When configured for Memory Mode operation, the CS8900A's internal registers and frame buffers are mapped into a contiguous 4-Kbyte block of host memory, providing the host with direct access to the CS8900A's internal registers and frame buffers. The host initiates Read operations by driving the $\overline{\text{MEMR}}$ pin low and Write operations by driving the $\overline{\text{MEMW}}$ pin low.

For additional information about Memory Mode, see Section 4.9 on page 74.

3.2.2 I/O Mode Operation

When configured for I/O Mode operation, the CS8900A is accessed through eight, 16-bit I/O ports that are mapped into sixteen contiguous I/O locations in the host system's I/O space. I/O Mode is the default configuration for the CS8900A and is always enabled.

For an I/O Read or Write operation, the AEN pin must be low, and the 16-bit I/O address on the ISA System Address bus (SA0 - SA15) must match the address space of the CS8900A. For a Read, $\overline{\text{IOR}}$ must be low, and for a Write, $\overline{\text{IOW}}$ must be low.

For additional information about I/O Mode, see Section 4.10 on page 76.

3.2.3 Interrupt Request Signals

The CS8900A has four interrupt request output pins that can be connected directly to any four of the ISA bus Interrupt Request signals. Only one interrupt output is used at a time. It is selected during initialization by writing the interrupt number (0 to 3) into PacketPage Memory base + 0022h. Unused interrupt request pins are placed in a high-impedance state. The selected interrupt request pin goes high when an enabled interrupt is triggered. The pin goes low after the Interrupt Status Queue (ISQ) is read as all 0's (see Section 5.1 on page 79 for a description of the ISQ).

Table 1 presents one possible way of connecting the interrupt request pins to the ISA bus that utilizes commonly available interrupts and facilitates board layout.

CS8900A Interrupt Request Pin	ISA Bus Interrupt	PacketPage base + 0022h
INTRQ3 (Pin 35)	IRQ5	0003h
INTRQ0 (Pin 32)	IRQ10	0000h
INTRQ1 (Pin 31)	IRQ11	0001h
INTRQ2 (Pin 30)	IRQ12	0002h

Table 1. Interrupt Assignments

3.2.4 DMA Signals

The CS8900A interfaces directly to the host DMA controller to provide DMA transfers of receive frames from CS8900A memory to host memory. The CS8900A has three pairs of DMA pins that can be connected directly to the three 16-bit DMA channels of the ISA bus. Only one DMA channel is used at a time. It is selected during initialization by writing the number of the desired channel (0, 1 or 2) into PacketPage Memory base + 0024h. Unused DMA pins are placed in a high-impedance state. The selected DMA request pin goes high when the CS8900A has received frames to transfer to the host memory via DMA. If the DMABurst bit (register 17, BusCTL, Bit B) is clear, the pin goes low after the DMA operation is complete. If the

DMABurst bit is set, the pin goes low 32 µs after the start of a DMA transfer.

The DMA pin pairs are arranged on the CS8900A to facilitate board layout. Crystal recommends the configuration in Table 2 when connecting these pins to the ISA bus.

CS8900A DMA Signal (Pin #)	ISA DMA Signal	PacketPage base + 0024h
DMARQ0 (Pin 15)	DRQ5	0000h
$\overline{\text{DMACK0}}$ (Pin 16)	DACK5	
DMARQ1 (Pin 13)	DRQ6	0001h
$\overline{\text{DMACK1}}$ (Pin 14)	DACK6	
DMARQ2 (Pin 11)	DRQ7	0002h
$\overline{\text{DMACK2}}$ (Pin 12)	DACK7	

Table 2. DMA Assignments

For a description of DMA mode, see Section 5.4 on page 90.

3.3 Reset and Initialization

3.3.1 Reset

Seven different conditions cause the CS8900A to reset its internal registers and circuits.

3.3.1.1 External Reset, or ISA Reset

There is a chip-wide reset whenever the RESET pin is high for at least 400 ns. During a chip-wide reset, all circuitry and registers in the CS8900A are reset.

3.3.1.2 Power-Up Reset

When power is applied, the CS8900A maintains reset until the voltage at the supply pins reaches approximately 2.5 V. The CS8900A comes out of reset once Vcc is greater than approximately 2.5 V *and* the crystal oscillator has stabilized.

3.3.1.3 Power-Down Reset

If the supply voltage drops below approximately 2.5 V, there is a chip-wide reset. The CS8900A comes out of reset once the power supply returns to a level greater than approximately 2.5 V *and* the crystal oscillator has stabilized.

3.3.1.4 EEPROM Reset

There is a chip-wide reset if an EEPROM checksum error is detected (see Section 3.4 on page 21).

3.3.1.5 Software Initiated Reset

There is a chip-wide reset whenever the RESET bit (Register 15, SelfCTL, Bit 6) is set.

3.3.1.6 Hardware (HW) Standby or Suspend

The CS8900A goes though a chip-wide reset whenever it enters or exits either HW Standby mode or HW Suspend mode (see Section 3.7 on page 26 for more information about HW Standby and Suspend).

3.3.1.7 Sof tware (SW) Suspend

Whenever the CS8900A enters SW Suspend mode, all registers and circuits are reset except for the ISA I/O Base Address register (located at PacketPage base + 0020h) and the SelfCTL register (Register 15). Upon exit, there is a chip-wide reset (see Section 3.7 on page 26 for more information about SW Suspend).

3.3.2 Allowing Time for Reset Operation

After a reset, the CS8900A goes through a self configuration. This includes calibrating on-chip analog circuitry, and reading EEPROM for validity and configuration. Time required for the reset calibration is typically 10 ms. Software drivers should not access registers internal to the CS8900A during this time. When calibration is done, bit INITD in the Self Status Register (register 16) is set indicating that initialization is complete, and the SIBUSY bit in the same register is cleared indicating the EEPROM is no longer being read or programmed.

3.3.3 Bus Reset Considerations

The CS8900A reads 3000h from IObase+0Ah after the reset, until the software writes a non-zero value at IObase+0Ah. The 3000h value can be used as part of the CS8900A signature when the system scans for the CS8900A. See Section 4.10 on page 76.

After a reset, the ISA bus outputs INTRx and DMARQx are 3-Stated, thus avoiding any interrupt or DMA channel conflicts on the ISA bus at power-up time.

3.3.4 Initialization

After each reset (except EEPROM Reset), the CS8900A checks the sense of the EEDataIn pin to see if an external EEPROM is present. If EEDI is high, an EEPROM is present and the CS8900A automatically loads the configuration data stored in the EEPROM into its internal registers (see next section). If EEDI is low, an EEPROM is not present and the CS8900A comes out of reset with the default configuration shown in Table 3.

A low-cost serial EEPROM can be used to store configuration information that is automatically loaded into the CS8900A after each reset (except EEPROM reset). The use of an EEPROM is optional.

The CS8900A operates with any of six standard EEPROM's shown in Table 4.

PacketPage Address	Register Contents	Register Descriptions
0020h	0300h	I/O Base Address*
0022h	XXXX XXXX XXXX X100	Interrupt Number
0024h	XXXX XXXX XXXX XX11	DMA Channel
0026h	0000h	DMA Start of Frame Offset
0028h	X000h	DMA Frame Count
002Ah	0000h	DMA Byte Count
002Ch	XXX0 0000h	Memory Base Address
0030h	XXX0 0000h	Boot PROM Base Address
0034h	XXX0 0000h	Boot PROM Address Mask
0102h	0003h	Register 3 - RxCFG
0104h	0005h	Register 5 - RxCTL
0106h	0007h	Register 7 - TxCFG
0108h	0009h	Register 9 - TxCMD
010Ah	000Bh	Register B - BufCFG
010Ch	Undefined	Reserved
010Eh	Undefined	Reserved
0110h	Undefined	Reserved
0112h	00013h	Register 13 - LineCTL
0114h	0015h	Register 15 - SelfCTL
0116h	0017h	Register 17 - BusCTL
0118h	0019h	Register 19 - TestCTL

* I/O base address is unaffected by Software Suspend mode.

Table 3. Default Configuration

EEPROM Type	Size (16-bit words)
'C46 (non-sequential)	64
'CS46 (sequential)	64
'C56 (non-sequential)	128
'CS56 (sequential)	128
'C66 (non-sequential)	256
'CS66 (sequential)	256

Table 4. Supported EEPROM Types

3.4 Configurations with EEPROM

3.4.1 EEPROM Interface

The interface to the EEPROM consists of the four signals shown in Table 5.

CS8900A Pin (Pin #)	CS8900A Function	EEPROM Pin
EECS (Pin 3)	EEPROM Chip Select	Chip Select
EESK (PIN 4)	1 MHz EEPROM Serial Clock output	Clock
EEDO (Pin 5)	EEPROM Data Out (data to EEPROM)	Data In
EEDI (Pin 6)	EEPROM Data in (data from EEPROM)	Data Out

Table 5. EEPROM Interface

3.4.2 EEPROM Memory Organization

If an EEPROM is used to store initial configuration information for the CS8900A, the EEPROM is organized in one or more blocks of 16-bit words. The first block in EEPROM, referred to as the Configuration Block, is used to configure the CS8900A after reset. An example of a typical Configuration Block is shown in Table 6. Additional blocks containing user data may be stored in the EEPROM. However, the Configuration Block must always start at address 00h and be stored in contiguous memory locations.

3.4.3 Reset Configuration Block

The first block in EEPROM, referred to as the Reset Configuration Block, is used to automatically program the CS8900A with an initial configuration after a reset. Additional user data may also be stored in the EEPROM if space is available. The additional data are stored as 16-bit words and can occupy any EEPROM address space beginning immediately after the end of the Reset Configuration Block up to address 7Fh, depending on EEPROM size. This additional data can only be accessed through software control (refer to Section 3.5 on page 24 for more information on accessing the EEPROM). Address space 80h to AFh is reserved.

3.4.3.1 Reset Configuration Block Structure

The Reset Configuration Block is a block of contiguous 16-bit words starting at EEPROM address 00h. It can be divided into three logical sections: a header, one or more groups of configuration data words, and a checksum value. All of the words in the Reset Configuration Block are read sequentially by the CS8900A after each reset, starting with the header and ending with the checksum. Each group of configuration data is used to program a PacketPage register (or set of PacketPage registers in some cases) with an initial non-default value.

3.4.3.2 Reset Configuration Block Header

The header (first word of the block located at EEPROM address 00h) specifies the type of EEPROM used, whether or not a Reset Configuration block is present, and if so, how many bytes of configuration data are stored in the Reset Configuration Block.

3.4.3.3 Determining the EEPROM Type

The LSB of the high byte of the header indicates the type of EEPROM attached: sequential or non-sequential. An LSB of 0 (XXXX-XXX0) indicates a sequential EEPROM. An LSB of 1 (XXXX-XXX1) indicates a non-sequential EEPROM. The CS8900A works equally well with either type of EEPROM. The CS8900A will automatically generate sequential addresses while reading the Reset Configuration Block if a non-sequential EEPROM is used.

3.4.3.4 Checking EEPROM for presence of Reset Configuration Block

The read-out of either a binary 101X-XXX0 or 101X-XXX1 (X = do not care) from the high byte of the header indicates the presence of configuration data. Any other readout value terminates initialization from the EEPROM. If an EEPROM is attached but not used for configuration, Crystal recommends that the high byte of the first word be programmed with 00h in order to ensure that the

Word Address	Value	Description
FIRST WORD in DATA BLOCK		
00h	A120h	Configuration Block Header. The high byte, A1h, indicates a 'C46 EEPROM is attached. The Link Byte, 20h, indicates the number of bytes to be used in this block of configuration data.
FIRST GROUP of WORDS		
01h	2020h	Group Header for first group of words. Three words to be loaded, beginning at 0020h in PacketPage memory.
02h	0300h	I/O Base Address
03h	0003h	Interrupt Number
04h	0001h	DMA Channel Number
SECOND GROUP of WORDS		
05h	502Ch	Group Header for second group of words. Six words to be loaded, beginning at 002Ch in PacketPage memory.
06h	E000h	Memory Base Address - low word
07	000Fh	Memory Base Address - high word
08h	0000h	Boot PROM Base Address - low word
09h	000Dh	Boot PROM Base Address - high word
0Ah	C000h	Boot PROM Address Mask - low word
0Bh	000Fh	Boot PROM Address Mask - high word
THIRD GROUP of WORDS		
0Ch	2158h	Group Header for third group of words. Three words to be loaded, beginning at 0158 in PacketPage memory.
0Dh	0010h	Individual Address - Octet 0 and 1
0Eh	0000h	Individual Address - Octet 2 and 3
0Fh	0000h	Individual Address - Octet 4 and 5
CHECKSUM Value		
10h	2800h	The high byte, 28h, is the Checksum Value. In this example, the checksum includes word addresses 00h through 0Fh. The hexadecimal sum of the bytes is D8h, resulting in a 2's complement of 28h. The low byte, 00h, provides a pad to the word boundary.

* FFFFh is a special code indicating that there are no more words in the EEPROM.

Table 6. EEPROM Configuration Block Example

CS8900A will not attempt to read configuration data from the EEPROM.

3.4.3.5 Determining Number of Bytes in the Reset Configuration Block

The low byte of the Reset Configuration Block header is known as the link byte. The value of the Link Byte represents the number of bytes of configuration data in the Reset Configuration Block. The two bytes used for the header are excluded when calculating the Link Byte value.

For example, a Reset Configuration Block header of A104h indicates a non-sequential EEPROM programmed with a Reset Configuration Block containing 4 bytes of configuration data. This Reset Configuration Block occupies 6 bytes (3 words) of EEPROM space (2 bytes for the header and 4 bytes of configuration data).

3.4.4 Groups of Configuration Data

Configuration data are arranged as groups of words. Each group contains one or more words of data that are to be loaded into PacketPage registers.

The first word of each group is referred to as the Group Header. The Group Header indicates the number of words in the group and the address of the PacketPage register into which the first data word in the group is to be loaded. Any remaining words in the group are stored in successive PacketPage registers.

3.4.4.1 Group Header

Bits F through C of the Group Header specify the number of words in each group that are to be transferred to PacketPage registers (see Figure 4). This value is two less than the total number of words in the group, including the Group Header. For example, if bits F through C contain 0001, there are three words in the group (a Group Header and two words of configuration data).

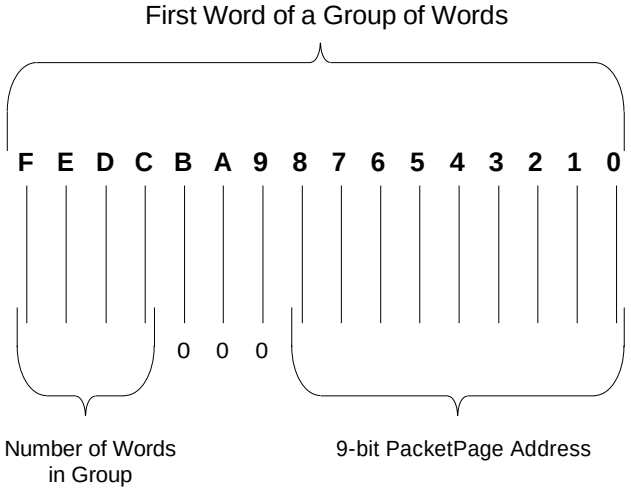

Figure 4. Group Header

Bits 8 through 0 of the Group Header specify a 9-bit PacketPage Address. This address defines the PacketPage register that will be loaded with the first word of configuration data from the group. Bits B though 9 of the Group Header are forced to 0, restricting the destination address range to the first 512 bytes of PacketPage memory. Figure 4 shows the format of the Group header.

3.4.5 Reset Configuration Block Checksum

A checksum is stored in the high byte position of the word immediately following the last group of data in the Reset Configuration Block. (The EEPROM address of the checksum value can be determined by dividing the value stored in the Link Byte by two). The checksum value is the 2's complement of the 8-bit sum (any carry out of eighth bit is ignored) of all the bytes in the Reset Configuration Block, excluding the checksum byte. This sum includes the Reset Configuration Block header at address 00h. Since the checksum is calculated as the 2's complement of the sum of all preceding bytes in the Reset Configuration Block, a total of 0 should result when the checksum value is added to the sum of the previous bytes.

3.4.6 EEPROM Example

Table 6 shows an example of a Reset Configuration Block stored in a C46 EEPROM. Note that little-endian word ordering is used, i.e., the least significant word of a multiword datum is located at the lowest address.

3.4.7 EEPROM Read-out

If the EEDI pin is asserted high at the end of reset, the CS8900A reads the first word of EEPROM data by:

1) Asserting EECS
2) Clocking out a Read-Register-00h command on EEDO (EESK provides a 1MHz serial clock signal)
3) Clocking the data in on EEDI.

If the EEDI pin is low at the end of the reset signal, the CS8900A does not perform an EEPROM read-out (uses its default configuration).

3.4.7.1 Determining EEPROM Size

The CS8900A determines the size of the EEPROM by checking the sense of EEDI on the tenth rising edge of EESK. If EEDI is low, the EEPROM is a

'C46 or 'CS46. If EEDI is high, the EEPROM is a 'C56, 'CS56, 'C66, or 'CS66.

3.4.7.2 Loading Configuration Data

The CS8900A reads in the first word from the EEPROM to determine if configuration data is contained in the EEPROM. If configuration data is not stored in the EEPROM, the CS8900A terminates initialization from EEPROM and operates using its default configuration (See Table 3). If configuration data is stored in EEPROM, the CS8900A automatically loads all configuration data stored in the Reset Configuration Block into its internal PacketPage registers.

3.4.8 EEPROM Read-out Completion

Once all the configuration data are transferred to the appropriate PacketPage registers, the CS8900A performs a checksum calculation to verify the Reset Configuration Blocks data are valid. If the resulting total is 0, the read-out is considered valid. Otherwise, the CS8900A initiates a partial reset to restore the default configuration.

If the read-out is valid, the EEPROMOK bit (Register 16, SelfST, bit A) is set. EEPROMOK is cleared if a checksum error is detected. In this case, the CS8900A performs a partial reset and is restored to its default. Once initialization is complete (configuration loaded from EEPROM or reset to default configuration) the INITD bit is set (Register 16, SelfST, bit 7).

3.5 Programming the EEPROM

After initialization, the host can access the EEPROM through the CS8900A by writing one of seven commands to the EEPROM Command register (PacketPage base + 0040h). Figure 5 shows the format of the EEPROM Command register.

3.5.1 EEPROM Commands

The seven commands used to access the EEPROM are: Read, Write, Erase, Erase/Write Enable, Erase/Write Disable, Erase-All, and Write-All. They are described in Table 7.

3.5.2 EEPROM Command Execution

During the execution of a command, the two Opcode bits, followed by the six bits of address (for a 'C46 or 'CS46) or eight bits of address (for a 'C56, 'CS56, 'C66 or 'CS66), are shifted out of the CS8900A, into the EEPROM. If the command is a Write, the data in the EEPROM Data register (PacketPage base + 0042h) follows. If the command is a Read, the data in the specified EEPROM

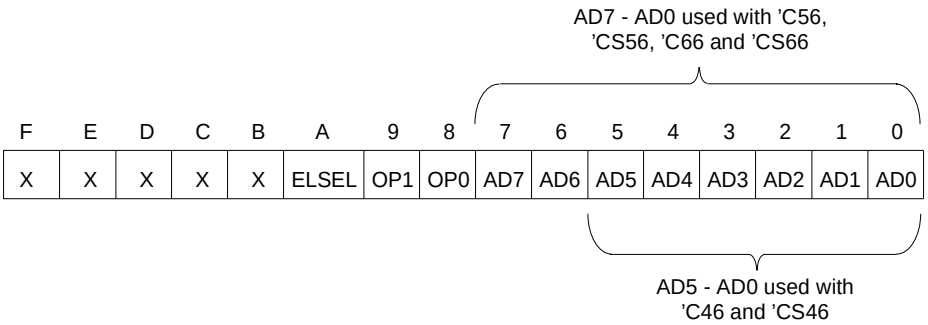

Bit	Name	Description
[F:B]		Reserved
[A]	ELSEL	External Logic Select: When clear, the EECS pin is used to select the EEPROM. When set, the ELCS pin is used to select the external LA decode circuit.
[9:8]	OP1, OP0	Opcode: Indicates what command is being executed (see next section).
[7:0]	AD7 to AD0	EEPROM Address: Address of EEPROM word being accessed.

Figure 5. EEPROM Command Register Format

Command	Opcode (bits 9,8)	EEPROM Address (bits 7 to 0)	Data	EEPROM Type	Execution Time
Read Register	1,0	word address	yes	all	25 µs
Write Register	0,1	word address	yes	all	10 ms
Erase Register	1.1	word address	no	all	10 ms
Erase/Write Enable	0,0	XX11-XXXX	no	‘CS46, ‘C46	9 µs
		11XX-XXXX	no	‘CS56, ‘C56, ‘CS66, ‘C66	9 µs
Erase/Write Disable	0,0	XX00-XXXX	no	‘CS46, ‘C46	9 µs
	0,0	00XX-XXXX	no	‘CS56, ‘C56, ‘CS66, ‘C66	9 µs
Erase-All Registers	0,0	XX10-XXXX	no	‘CS46, ‘C46	10 ms
	0,0	10XX-XXXX	no	‘CS56, ‘C56, ‘CS66, ‘C66	9 µs
Write-All Register	0,0	XX01-XXXX	yes	‘CS46, ‘C46	10 ms
	0,0	01XX-XXXX	yes	‘CS56, ‘C56, ‘CS66, ‘C66	10 ms

Table 7. EEPROM Commands

location is written into the EEPROM Data register. If the command is an Erase or Erase-All, no data is transferred to or from the EEPROM Data register. Before issuing any command, the host must wait for the SIBUSY bit (Register 16, SelfST, bit 8) to clear. After each command has been issued, the host must wait again for SIBUSY to clear.

3.5.3 Enabling Access to the EEPROM

The Erase/Write Enable command provides protection from accidental writes to the EEPROM. The host must write an Erase/Write Enable command before it attempts to write to or erase any EEPROM memory location. Once the host has finished altering the contents of the EEPROM, it must write an Erase/Write Disable command to prevent unwanted modification of the EEPROM.

3.5.4 Writing and Erasing the EEPROM

To write data to the EEPROM, the host must execute the following series of commands:

1) Issue an Erase/Write Enable command.
2) Load the data into the EEPROM Data register.
3) Issue a Write command.
4) Issue an Erase/Write Disable command.

During the Erase command, the CS8900A writes FFh to the specified EEPROM location. During the Erase-All command, the CS8900A writes FFh to all locations.

3.6 Boot PROM Operation

The CS8900A supports an optional Boot PROM used to store code for remote booting from a network server.

3.6.1 Accessing the Boot PROM

To retrieve the data stored in the Boot PROM, the host issues a Read command to the Boot PROM as a Memory space access. The CS8900A decodes the command and drives the $\overline{\text{CSOUT}}$ pin low, causing the data stored in the Boot PROM to be shifted into the bus transceiver. The bus transceiver then drives the data out onto the ISA bus.

3.6.2 Configuring the CS8900A for Boot PROM Operation

Figure 6 shows how the CS8900A should be connected to the Boot PROM and ’245 driver. To configure the CS8900A’s internal registers for Boot PROM operation, the Boot PROM Base Address must be loaded into the Boot PROM Base Address register (PacketPage base + 0030h) and the Boot PROM Address Mask must be loaded into the

BootPROM Address Mask register (PacketPage base + 0034h). The Boot PROM Base Address provides the starting location in host memory where the Boot PROM is mapped. The Boot PROM Address Mask indicates the size of the attached Boot PROM and is limited to 4-Kbyte increments. The lower 12 bits of the Address Mask are ignored and should be 000h.

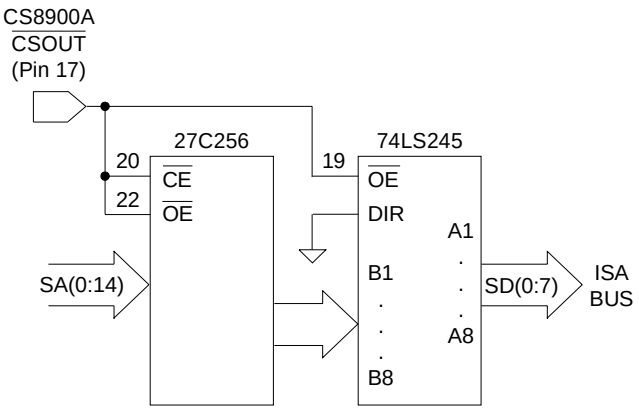

Figure 6. Boot PROM Connection Diagram

In the EEPROM example shown in Table 6, the Boot PROM starting address is D0000h and the Address Mask is FC000h. This configuration describes a 16-Kbyte (128 Kbit) PROM mapped into host memory from D0000h to D3FFFh.

3.7 Low-Power Modes

For power-sensitive applications, the CS8900A supports three low-power modes: Hardware Standby, Hardware Suspend, and Software Suspend. All three low-power modes are controlled through the SelfCTL register (Register 15). See also Section 4.4.4 on page 49.

An internal reset occurs when the CS8900A comes out of any suspend or standby mode. After a reset (internal or external), the CS8900A goes through a self configuration. This includes calibrating on-chip analog circuitry, and reading EEPROM for validity and configuration. When the calibration is done, bit InitD in Register 16 (Self Status register) is set indicating that initialization is complete, and the SIBUSY bit in the same register is cleared (indicating that the EEPROM is no longer being read or programmed. Time required for the reset calibration is typically 10 ms. Software drivers should not access registers internal to CS8900A during this time.

3.7.1 Hardware Standby

Hardware (HW) Standby is designed for use in systems, such as portable PC's, that may be temporarily disconnected from the 10BASE-T cable. It allows the system to conserve power while the LAN is not in use, and then automatically restore Ethernet operation once the cable is reconnected.

In HW Standby mode, all analog and digital circuitry in the CS8900A is turned off, except for the 10BASE-T receiver which remains active to listen for link activity. If link activity is detected, the $\overline{\text{LANLED}}$ pin is driven low, providing an indication to the host that the network connection is active. The host can then activate the CS8900A by deasserting the $\overline{\text{SLEEP}}$ pin. During this mode, all ISA bus accesses are ignored.

To enter HW Standby mode, the $\overline{\text{SLEEP}}$ pin must be low *and* the HWSleepE bit (Register 15, SelfCTL, Bit 9) *and* the HWStandbyE bit (Register 15, SelfCTL, Bit A) must be set. When the CS8900A enters HW Standby, all registers and circuits are reset except for the SelfCTL register. Upon exit from HW Standby, the CS8900A performs a complete reset, and then goes through normal initialization.

3.7.2 Hardware Suspend

During Hardware Suspend mode, the CS8900A uses the least amount of current of the three low-power modes. All internal circuits are turned off and the CS8900A's core is electronically isolated from the rest of the system. Accesses from the ISA bus and Ethernet activity are both ignored.

HW Suspend mode is entered by driving the $\overline{\text{SLEEP}}$ pin low and setting the HWSleepE bit (Register 15, SelfCTL, bit 9) while the HWStandbyE bit (Register 15, SelfCTL, bit A) is clear. To

exit from this mode, the $\overline{\text{SLEEP}}$ pin must be driven high. Upon exit, the CS8900A performs a complete reset, and then goes through a normal initialization procedure.

3.7.3 Software Suspend

Software (SW) Suspend mode can be used to conserve power in applications, like adapter cards, that do not have power management circuitry available. During this mode, all internal circuits are shut off except the I/O Base Address register (PacketPage base + 0020h) and the SelfCTL register (Register 15).

To enter SW Suspend mode, the host must set the SWSuspend bit (Register 15, SelfCTL, bit 8). To exit SW Suspend, the host must write to the CS8900A's assigned I/O space (the Write is only used to wake the CS8900A, the Write itself is ignored). Upon exit, the CS8900A performs a complete reset, and then goes through a normal initialization procedure.

Any hardware reset takes the chip out of any sleep mode.

Table 8 summarizes the operation of the three low-power modes.

CS8900A Configuration					CS8900A Operation
$\overline{\text{SLEEP}}$ (Pin 77)	**HWStandbyE (SelfCTL, Bit A)**	**HWSleepE (SelfCTL, Bit 9)**	**SWSuspend (SelfCTL, Bit 8)**	**Link Activity**	
Low	1	1	N/A	Not Present	HW Standby mode: 10BASE-T receiver listens for link activity
Low	1	1	N/A	Present	HW Standby mode: LANLED low
Low	0	1	N/A	N/A	HW Suspend mode
Low to High	N/A	1	0	N/A	CS8900A resets and goes through initialization
High	N/A	N/A	0	N/A	Not in low-power mode
High	N/A	N/A		N/A	SW Suspend mode
Low	N/A	0	1	N/A	SW Suspend mode
Low	N/A	0	0	N/A	Not in low-power mode

Notes: 1. Both HW and HW Suspend take precedence over SW Suspend.

Table 8. Low-Power Mode Operation

3.8 LED Outputs

The CS8900A provides three output pins that can be used to control LEDs or external logic.

3.8.0.1 LANLED

LANLED goes low whenever the CS8900A transmits or receives a frame, or when it detects a collision. LANLED remains low until there has been no activity for 6 ms (i.e. each transmission, reception, or collision produces a pulse lasting a minimum of 6 ms).

3.8.0.2 LINKLED or HC0

LINKLED or HC0 can be controlled by either the CS8900A or the host. When controlled by the CS8900A, LINKLED is low whenever the CS8900A receives valid 10BASE-T link pulses. To configure this pin for CS8900A control, the HC0E bit (Register 15, SelfCTL, Bit C) must be clear. When controlled by the host, LINKLED is low whenever the HCB0 bit (Register 15, SelfCTL, Bit E) is set. To configure it for host control, the HC0E bit must be set. Table 9 summarizes this operation.

HC0E (Bit C)	HCB0 (Bit E)	Pin Function
0	N/A	Pin configured as LINKLED: Output is low when valid 10BASE-T link pulses are detected. Output is high if valid link pulses are not detected
1	0	Pin configured as HC0: Output is high
1	1	Pin configured as HC0: Output is low

Table 9. LINKLED/HC0 Pin Operation

3.8.0.3 BSTATUS or HC1

BSTATUS or HC1 can be controlled by either the CS8900A or the host. When controlled by the CS8900A, BSTATUS is low whenever the host reads the RxEvent register (PacketPage base + 0124h), signaling the transfer of a receive frame across the ISA bus. To configure this pin for CS8900A control, the HC1E bit (Register 15, SelfCTL, Bit D) must be clear. When controlled by the host, BSTATUS is low whenever the HCB1 bit (Register 15, SelfCTL, Bit F) is set. To configure it for host control, HC1E must be set. Table 10 summarizes this operation.

HC1E (Bit D)	HCB1 (Bit F)	Pin Function
0	N/A	Pin configured as BSTATUS: Output is low when a receive frame begins transfer across the ISA bus. Output is high otherwise
1	0	Pin configured as HC1: Output is high
1	1	Pin configured as HC1: Output is low

Table 10. BSTATUS/HCI Pin Operation

3.8.1 LED Connection

Each LED output is capable of sinking 10 mA to drive an LED directly through a series resistor. The output voltage of each pin is less than 0.4 V when the pin is low. Figure 7 shows a typical LED circuit.

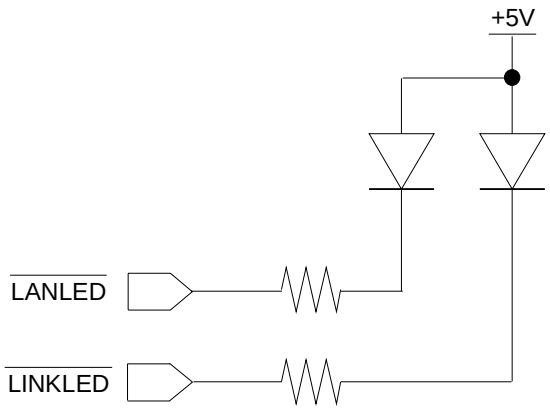

Figure 7. LED Connection Diagram

3.9 Media Access Control

3.9.1 Overview

The CS8900A's Ethernet Media Access Control (MAC) engine is fully compliant with the IEEE 802.3 Ethernet standard (ISO/IEC 8802-3, 1993). It handles all aspects of Ethernet frame transmission and reception, including: collision detection, preamble generation and detection, and CRC genera-

tion and test. Programmable MAC features include automatic retransmission on collision, and padding of transmitted frames.

Figure 8 shows how the MAC engine interfaces to other CS8900A functions. On the host side, it interfaces to the CS8900A's internal data/address/control bus. On the network side, it interfaces to the internal Manchester encoder/decoder (ENDEC). The primary functions of the MAC are: frame encapsulation and decapsulation; error detection and handling; and, media access management.

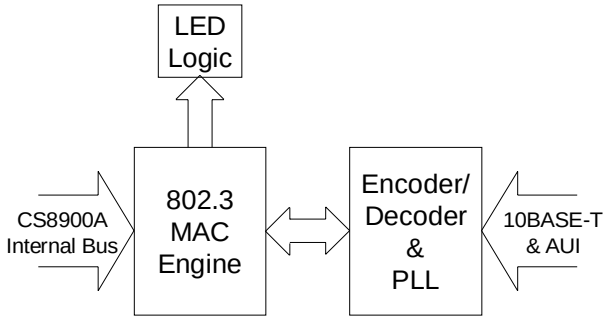

Figure 8. MAC Interface

3.9.2 Frame Encapsulation and Decapsulation

The CS8900A's MAC engine automatically assembles transmit packets and disassembles receive packets. It also determines if transmit and receive frames are of legal minimum size.

3.9.2.1 Transmission

Once the proper number of bytes have been transferred to the CS8900A's memory (either 5, 381, 1021 bytes, or full frame), and providing that access to the network is permitted, the MAC automatically transmits the 7-byte preamble (1010101b...), followed by the Start-of-Frame Delimiter (SFD, 10101011b), and then the serialized frame data. It then transmits the Frame Check Sequence (FCS). The data after the SFD and before the FCS (Destination Address, Source Address, Length, and data field) is supplied by the host. FCS generation by the CS8900A may be disabled by setting the InhibitCRC bit (Register 9, TxCMD, bit C).

Figure 9 shows the Ethernet frame format.

3.9.2.2 Reception

The MAC receives the incoming packet as a serial stream of NRZ data from the Manchester encoder/decoder. It begins by checking for the SFD. Once the SFD is detected, the MAC assumes all subsequent bits are frame data. It reads the DA and compares it to the criteria programmed into the address filter (see Section 5.3 on page 87 for a description of Address Filtering). If the DA passes the address filter, the frame is loaded into the CS8900A's memory. If the BufferCRC bit (Register 3, RxCFG, bit B) is set, the received FCS is also loaded into memory. Once the entire packet has been received, the MAC validates the FCS. If an error is detected, the CRCerror bit (Register 4, RxEvent, Bit C) is set.

3.9.2.3 Enforcing Minimum Frame Size

The MAC provides minimum frame size enforce-

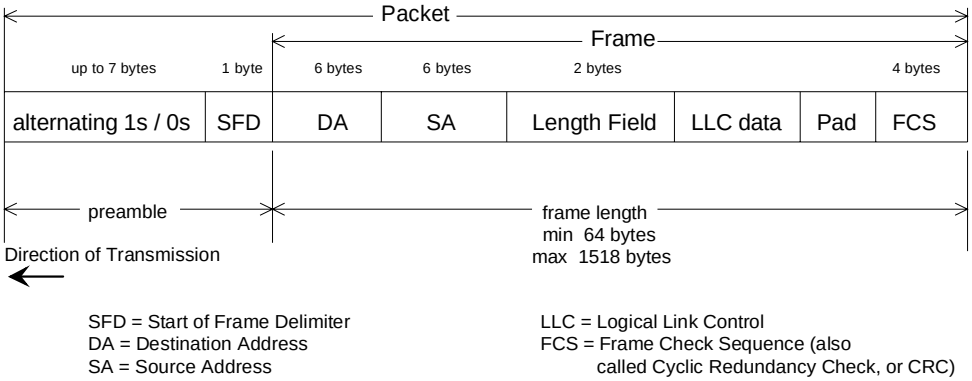

Figure 9. Ethernet Frame Format

ment of both transmit and receive packets. When the TxPadDis bit (Register 9, TxCMD, Bit D) is clear, transmit frames will be padded with additional bits to ensure that the receiving station receives a legal frame (64 bytes, including CRC). When TxPadDis is set, the CS8900A will not add pad bits and will transmit frames less that 64 bytes. If a frame is received that is less than 64 bytes (including CRC), the Runt bit (Register 4, RxEvent, Bit D) will be set indicating the arrival of an illegal frame.

3.9.3 Transmit Error Detection and Handling

The MAC engine monitors Ethernet activity and reports and recovers from a number of error conditions. For transmission, the MAC reports the following errors in the TxEvent register (Register 8) and BufEvent register (Register C):

3.9.3.1 Loss of Carrier

Whenever the CS8900A is transmitting on the AUI port, it expects to see its own transmission "looped back" to its receiver. If it is unable to monitor its transmission after the end of the preamble, the MAC reports a loss-of-carrier error by setting the Loss-of-CRS bit (Register 8, TxEvent, Bit 6). If the Loss-of-CRSiE bit (Register 7, TxCFG, Bit 6) is set, the host will be interrupted.

3.9.3.2 SQE Error

After the end of transmission on the AUI port, the MAC expects to see a collision within 64 bit times. If no collision is detected, the SQEerror bit (Register 8, TxEvent, Bit 7) is set. If the SQEerroriE bit is set (Register 7, TxCFG, Bit 7), the host is interrupted. An SQE error may indicate a fault on the AUI cable or a faulty transceiver (it is assumed that the attached transceiver supports this function).

3.9.3.3 Out-of-Window (Late) Collision

If a collision is detected after the first 512 bits have been transmitted, the MAC reports a late collision by setting the Out-of-window bit (Register 8, TxEvent, Bit 9). The MAC then forces a bad CRC and terminates the transmission. If the Out-of-windowiE bit (Register 7, TxCFG, Bit 9) is set, the host is interrupted. A late collision may indicate an illegal network configuration.

3.9.3.4 Jabber Error

If a transmission continues longer than about 26 ms, the MAC disables the transmitter and sets the Jabber bit (Register 8, TxEvent, Bit A). The output of the transmitter returns to idle and remains there until the host issues a new Transmit Command. If the JabberiE bit (Register 7, TxCFG, Bit A) is set, the host is interrupted. A Jabber condition indicates that there may be something wrong with the CS8900A transmit function. To prevent possible network faults, the host should clear the transmit buffer. Possible options include:

Reset the chip with either software or hardware reset (see Section 3.3 on page 19).

Issue a Force Transmit Command by setting the Force bit (Register 9, TxCMD, bit 8).

Issue a Transmit Command with the TxLength field set to zero.

3.9.3.5 Transmit Collision

The MAC counts the number of times an individual packet must be retransmitted due to network collisions. The collision count is stored in bits B through E of the TxEvent register (Register 8). If the packet collides 16 times, transmission of that packet is terminated and the 16coll bit (Register 8, TxEvent, Bit F) is set. If the 16colliE bit (Register 7, TxCFG, Bit F) is set, the host will be interrupted on the 16th collision. A running count of transmit collisions is recorded in the TxCOL register.

3.9.3.6 Transmit Underrun

If the CS8900A starts transmission of a packet but runs out of data before reaching the end of frame, the TxUnderrun bit (Register C, BufEvent, Bit 9) is set. The MAC then forces a bad CRC and terminates the transmission. If the TxUnderruniE bit

(Register B, BufCFG, Bit 9) is set, the host is interrupted.

3.9.4 Receive Error Detection and Handling

The following receive errors are reported in the RxEvent register (Register 4):

3.9.4.1 CRC Error

If a frame is received with a bad CRC, the CRCerror bit (Register 4, RxEvent, Bit C) is set. If the CRCerrorA bit (Register 5, RxCTL, Bit C) is set, the frame will be buffered by CS8900A. If the CRCerroriE bit (Register 3, RxCFG. Bit C) is set, the host is interrupted.

3.9.4.2 Runt Frame

If a frame is received that is shorter than 64 bytes, the Runt bit (Register 4, RxEvent, Bit D) is set. If the RuntA bit (Register 5, RxCTL, Bit D) is set, the frame will still be buffered by CS8900A. If the RuntiE bit (Register 3, RxCFG. Bit D) is set, the host is interrupted.

3.9.4.3 Extra Data

If a frame is received that is longer than 1518 bytes, the Extradata bit (Register 4, RxEvent, Bit E) is set. If the ExtradataA bit (Register 5, RxCTL, Bit E) is set, the first 1518 bytes of the frame will still be buffered by CS8900A. If the ExtradataiE bit (Register 3, RxCFG. Bit E) is set, the host is interrupted.

3.9.4.4 Dribble Bits and Alignment Error

Under normal operating conditions, the MAC may detect up to 7 additional bits after the last full byte of a receive packet. These bits, known as dribble bits, are ignored. If dribble bits are detected, the Dribblebit bit (Register 4, RxEvent, Bit 7) is set. If both the Dribblebits bit and CRCerror bit (Register 4, RxEvent, Bit C) are set at the same time, an alignment error has occurred.

3.9.5 Media Access Management

The Ethernet network topology is a single shared medium with several attached stations. The Ethernet protocol is designed to allow each station equal access to the network at any given time. Any node can attempt to gain access to the network by first completing a deferral process (described below) after the last network activity, and then transmitting a packet that will be received by all other stations. If two nodes transmit simultaneously, a collision occurs and the colliding packets are corrupted. Two primary tasks of the MAC are to avoid network collisions, and then recover from them when they occur. In addition, when the CS8900A is using the AUI, the MAC must support the SQE Test function described in section 7.2.4.6 of the Ethernet standard.

3.9.5.1 Collision Avoidance

The MAC continually monitors network traffic by checking for the presence of carrier activity (carrier activity is indicated by the assertion of the internal Carrier Sense signal generated by the ENDEC). If carrier activity is detected, the network is assumed busy and the MAC must wait until the current packet is finished before attempting transmission. The CS8900A supports two schemes for determining when to initiate transmission: Two-Part Deferral, and Simple Deferral. Selection of the deferral scheme is determined by the 2-partDefDis bit (Register 13, LineCTL, Bit D). If the 2-partDefDis bit is clear, the MAC uses a two-part deferral process defined in section 4.2.3.2.1 of the Ethernet standard (ISO/IEC 8802-3, 1993). If the 2-partDefDis bit is set, the MAC uses a simplified deferral scheme. Both schemes are described below:

3.9.5.2 Two-Part Deferral

In the two-part deferral process, the 9.6 µs Inter Packet Gap (IPG) timer is started whenever the internal Carrier Sense signal is deasserted. If activity is detected during the first 6.4 µs of the IPG timer, the timer is reset and then restarted once the activity has stopped. If there is no activity during the first 6.4 µs of the IPG timer, the IPG timer is allowed to time out (even if network activity is detected during

the final 3.2 µs). The MAC then begins transmission if a transmit packet is ready and if it is not in Backoff (Backoff is described later in this section). If no transmit packet is pending, the MAC continues to monitor the network. If activity is detected before a transmit frame is ready, the MAC defers to the transmitting station and resumes monitoring the network.

The two-part deferral scheme was developed to prevent the possibility of the IPG being shortened due to a temporary loss of carrier. Figure 10 diagrams the two-part deferral process.

3.9.5.3 Simple Deferral

In the simple deferral scheme, the IPG timer is started whenever Carrier Sense is deasserted. Once the IPG timer is finished (after 9.6 µs), if a transmit frame is pending and if the MAC is not in Backoff, transmission begins the 9.6 µs IPG). If no transmit packet is pending, the MAC continues to monitor the network. If activity is detected before a transmit frame is ready, the MAC defers to the transmitting station and resumes monitoring the network. Figure 11 diagrams the simple deferral process.

3.9.5.4 Collision Resolution

If a collision is detected while the CS8900A is transmitting, the MAC responds in one of three ways depending on whether it is a normal collision (within the first 512 bits of transmission) or a late collision (after the first 512 bits of transmission):

3.9.5.5 Normal Collisions

If a collision is detected before the end of the preamble and SFD, the MAC finishes the preamble and SFD, transmits the jam sequence (32-bit pattern of all 0's), and then initiates Backoff. If a collision is detected after the transmission of the preamble and SFD but before 512 bit times, the MAC immediately terminates transmission, transmits the jam sequence, and then initiates Backoff. In either case, if the Onecoll bit (Register 9, TxCMD, Bit 9) is clear, the MAC will attempt to transmit a packet a total of 16 times (the initial attempt plus 15 retransmissions) due to normal collisions. On the 16th collision, it sets the 16coll bit (Register 8, TxEvent, Bit F) and discards the packet. If the Onecoll bit is set, the MAC discards the packet without attempting any retransmission.

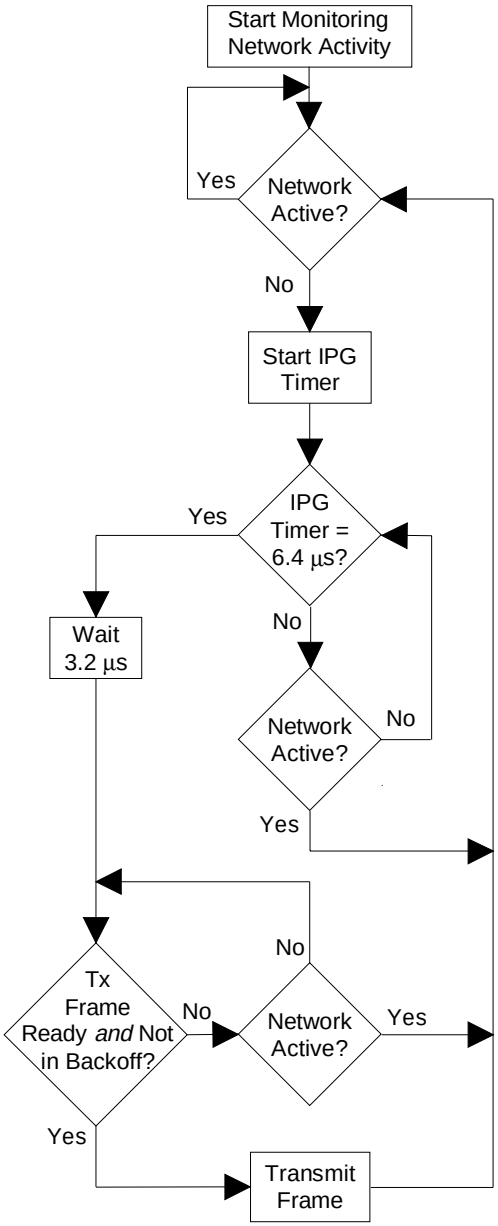

Figure 10. Two-Part Deferral

3.9.5.6 Late Collisions

If a collision is detected after the first 512 bits have been transmitted, the MAC immediately terminates transmission, transmits the jam sequence, discards the packet, and sets the Out-of-window bit (Register 8, TxEvent, Bit 9). The CS8900A does not initiate backoff or attempt to retransmit the frame. For additional information about Late Collisions, see *Out-of-Window Error* in this section.

3.9.5.7 Backoff

After the MAC has completed transmitting the jam sequence, it must wait, or "Back off", before attempting to transmit again. The amount of time it must wait is determined by one of two Backoff algorithms: the Standard Backoff algorithm (ISO/IEC 4.2.3.2.5) or the Modified Backoff algorithm. The host selects which algorithm through the ModBackoffE bit (Register 13, LineCTL, Bit B).

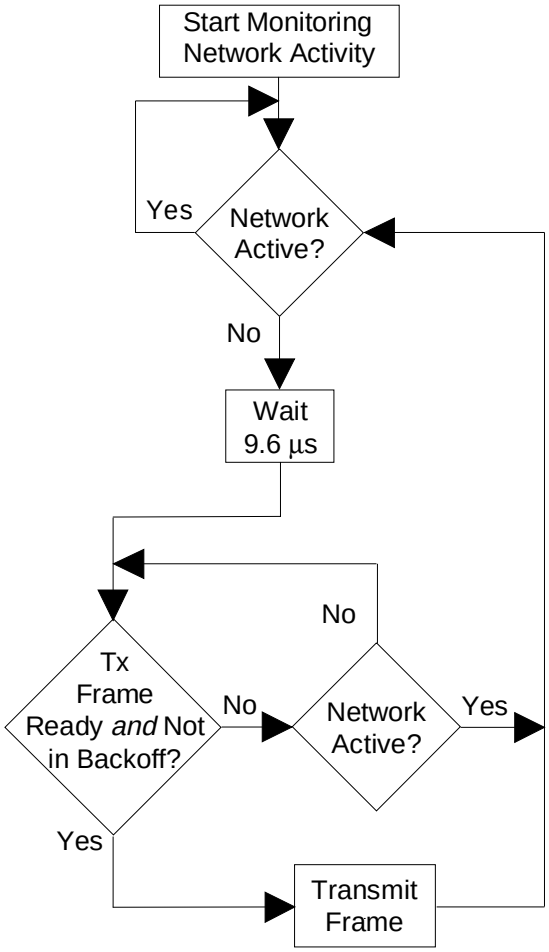

Figure 11. Simple Deferral

3.9.5.8 Standard Backoff

The Standard Backoff algorithm, also called the "Truncated Binary Exponential Backoff", is described by the equation:

$0 \le r \le 2^k$

where r (a random integer) is the number of slot times the MAC must wait (1 slot time = 512 bit times), and k is the smaller of n or 10, where n is the number of retransmission attempts.

3.9.5.9 Modified Backoff

The Modified Backoff is described by the equation:

$0 \le r \le 2^k$

where r (a random integer) is the number of slot times the MAC must wait, and k is 3 for $n < 3$ and k is the smaller of n or 10 for $n \ge 3$, where n is the number of retransmission attempts.

The advantage of the Modified Backoff algorithm over the Standard Backoff algorithm is that it reduces the possibility of multiple collisions on the first three retries. The disadvantage is that it extends the maximum time needed to gain access to the network for the first three retries.

The host may choose to disable the Backoff algorithm altogether by setting the DisableBackoff bit (Register 19, TestCTL, Bit B). When disabled, the CS8900A only waits the 9.6 µs IPG time before starting transmission.

3.9.5.10 SQE Test

If the CS8900A is transmitting on the AUI, the external transceiver should generate an SQE Test signal on the CI+/CI- pair following each transmission. The SQE Test is a 10 MHz signal lasting 5 to 15 bit times and starting within 0.6 to

1.6 µs after the end of transmission. During this period, the CS8900A ignores receive carrier activity (see SQE Error in this section for more information).

3.10 Encoder/Decoder (ENDEC)

The CS8900A's integrated encoder/decoder (ENDEC) circuit is compliant with the relevant portions of section 7 of the Ethernet standard (ISO/IEC 8802-3, 1993). Its primary functions include: Manchester encoding of transmit data; informing the MAC when valid receive data is present (Carrier Detection); and, recovering the clock and NRZ data from incoming Manchester-encoded data.

Figure 12 provides a block diagram of the ENDEC and how it interfaces to the MAC, AUI and 10BASE-T transceiver.

3.10.1 Encoder

The encoder converts NRZ data from the MAC and a 20 MHz Transmit Clock signal into a serial stream of Manchester data. The Transmit Clock is produced by an on-chip oscillator circuit that is driven by either an external 20 MHz quartz crystal or a TTL-level CMOS clock input. If a CMOS input is used, the clock should be 20 MHz ±0.01% with a duty cycle between 40% and 60%. The specifications for the crystal are described in Section 7.7 on page 121. The encoded signal is routed to either the 10BASE-T transceiver or AUI, depending on configuration.

3.10.2 Carrier Detection

The internal Carrier Detection circuit informs the MAC that valid receive data is present by asserting the internal Carrier Sense signal as soon it detects a valid bit pattern (1010b or 0101b for 10BASE-T, and 1b or 0b for AUI). During normal packet reception, Carrier Sense remains asserted while the frame is being received, and is deasserted 1.3 to 2.3 bit times after the last low-to-high transition of the End-of-Frame (EOF) sequence. Whenever the receiver is idle (no receive activity), Carrier Sense is deasserted. The CRS bit (Register 14, LineST, Bit E) reports the state of the Carrier Sense signal.

3.10.3 Clock and Data Recovery

When the receiver is idle, the phase-lock loop (PLL) is locked to the internal clock signal. The assertion of the Carrier Sense signal interrupts the PLL. When it restarts, it locks on the incoming data. The receive clock is then compared to the incoming data at the bit cell center and any phase difference is corrected. The PLL remains locked as long as the receiver input signal is valid. Once the PLL has locked on the incoming data, the ENDEC converts the Manchester data to NRZ and passes the decoded data and the recovered clock to the MAC for further processing.

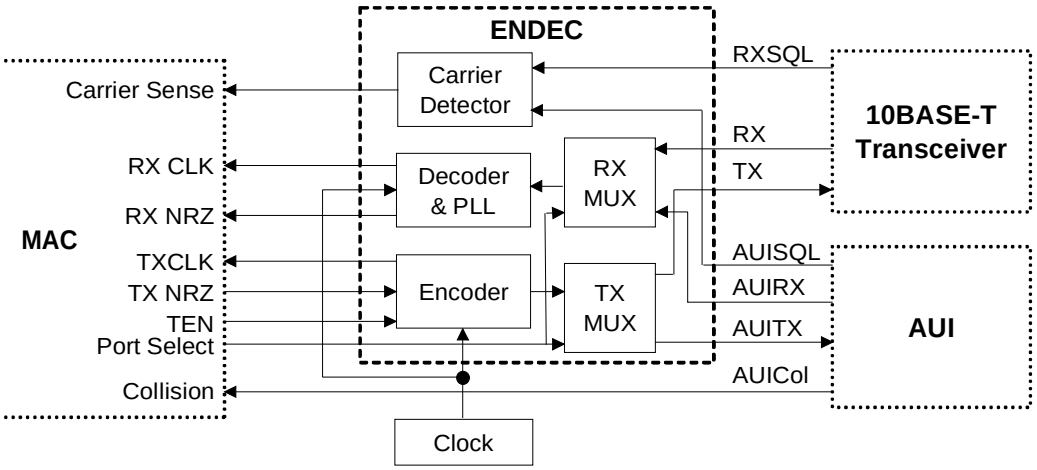

Figure 12. ENDEC

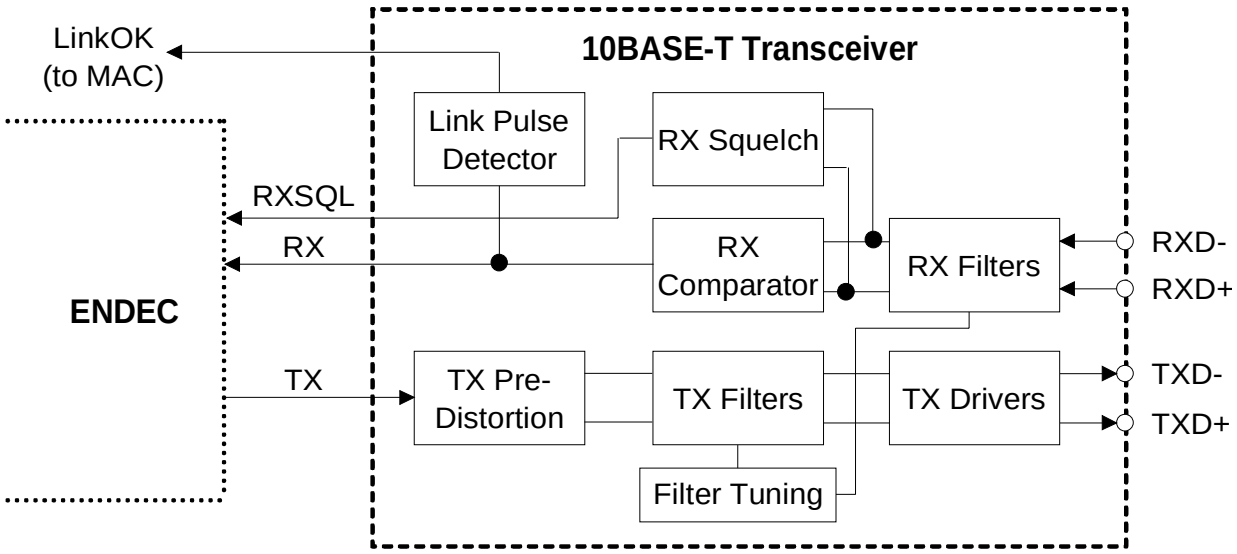

Figure 13. 10BASE-T Transceiver

3.10.4 Interface Selection

Physical interface selection is determined by AUI-only bit (Bit 8) and the AutoAUI/10BT (Bit 9) in the LineCTL register (Register 13). Table 11 describes the possible configurations.

AUIonly (Bit 8)	AutoAUI/10BT (Bit 9)	Physical Interface
0	0	10BASE-T Only
1	N/A	AUI Only
0	1	Auto-Select

Table 11. Interface Selection

3.10.4.1 10BASE-T Only

When configured for 10BASE-T only operation, the 10BASE-T transceiver and its interface to the ENDEC are active, and the AUI is powered down.

3.10.4.2 AUI Only

When configured for AUI-only operation, the AUI and its interface to the ENDEC are active, and the 10BASE-T transceiver is powered down.

3.10.4.3 Auto-Select

In Auto-Select mode, the CS8900A automatically selects the 10BASE-T interface and powers down the AUI if valid packets or link pulses are detected by the 10BASE-T receiver. If valid packets and link pulses are not detected, the CS8900A selects the AUI. Whenever the AUI is selected, the 10BASE-T receiver remains active to listen for link pulses or packets. If 10BASE-T activity is detected, the CS8900A switches back to 10BASE-T.

3.11 10BASE-T Transceiver

The CS8900A includes an integrated 10BASE-T transceiver that is compliant with the relevant portions of section 14 of the Ethernet standard (ISO/IEC 8802-3, 1993). It includes all analog and digital circuitry needed to interface the CS8900A directly to a simple isolation transformer (see Section 7.5 on page 120 for a connection diagram). Figure 13 provides a block diagram of the 10BASE-T transceiver.

3.11.1 10BASE-T Filters

The CS8900A's 10BASE-T transceiver includes integrated low-pass transmit and receive filters, eliminating the need for external filters or a filter/transformer hybrid. On-chip filters are gm/c implementations of fifth-order Butterworth low-pass filters. Internal tuning circuits keep the gm/c ratio tightly controlled, even when large temperature, supply, and IC process variations occur. The nominal 3 dB cutoff frequency of the filters is 16 MHz, and the nominal attenuation at 30 MHz (3rd harmonic) is -27 dB.

3.11.2 Transmitter

When configured for 10BASE-T operation, Manchester encoded data from the ENDEC is fed into the transmitter's predistortion circuit where initial wave shaping and preequalization is performed. The output of the predistortion circuit is fed into the transmit filter where final wave shaping occurs and unwanted noise is removed. The signal then passes to the differential driver where it is amplified and driven out of the TXD+/TXD- pins.

In the absence of transmit packets, the transmitter generates link pulses in accordance with section 14.2.1.1. of the Ethernet standard. Transmitted link pulses are positive pulses, one bit time wide, typically generated at a rate of one every 16 ms. The 16 ms timer starts whenever the transmitter completes an End-of-Frame (EOF) sequence. Thus, there is a link pulse 16 ms after an EOF unless there is another transmitted packet. Figure 14 diagrams the operation of the Link Pulse Generator.

If no link pulses are being received on the receiver, the 10BASE-T transmitter is internally forced to an inactive state unless bit DisableLT in register 19 (Test Control register) is set to one.

3.11.3 Receiver

The 10BASE-T receive section consists of the receive filter, squelch circuit, polarity detection and correction circuit, and link pulse detector.

3.11.3.1 Squelch Circuit

The 10BASE-T squelch circuit determines when valid data is present on the RXD+/RXD- pair. Incoming signals passing through the receive filter are tested by the squelch circuit. Any signal with amplitude less than the squelch threshold (either positive or negative, depending on polarity) is rejected.

3.11.3.2 Extended Range

The CS8900A supports an Extended Range feature that reduces the 10BASE-T receive squelch threshold by approximately 6 dB. This allows the CS8900A to operate with 10BASE-T cables that are longer than 100 meters (100 meters is the maximum length specified by the Ethernet standard). The exact additional distance depends on the quality of the cable and the amount of electromagnetic noise in the surrounding environment. To activate this feature, the host must set the LoRxSquelch bit (Register 13, LineCTL, Bit E).

3.11.4 Link Pulse Detection

To prevent disruption of network operation due to a faulty link segment, the CS8900A continually monitors the 10BASE-T receive pair (RXD+/RXD-) for packets and link pulses. After each packet or link pulse is received, an internal Link-Loss timer is started. As long as a packet or link pulse is received before the Link-Loss timer finishes (between 25 and 150 ms), the CS8900A maintains normal operation. If no receive activity is detected, the CS8900A disables packet transmission to prevent "blind" transmissions onto the network (link pulses are still sent while packet transmission is disabled). To reactivate transmission, the receiver must detect a single packet (the packet itself is ignored), or two link pulses separat-

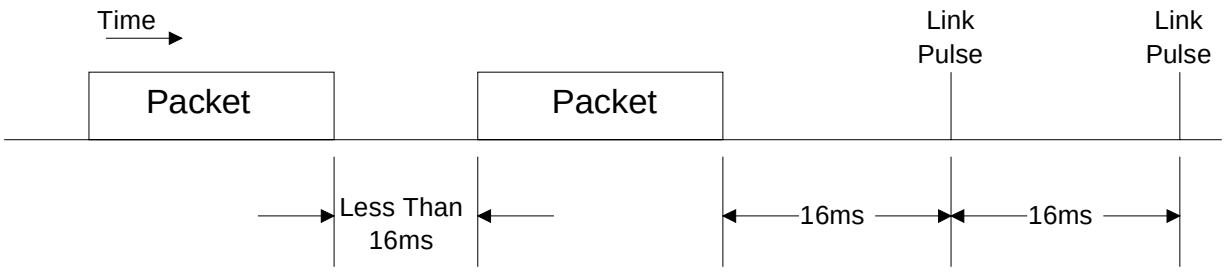

Figure 14. Link Pulse Transmission

ed by more than 2 to 7 ms and no more than 25 to 150 ms (see Section 7.4 on page 113 for 10BASE-T timing).

The state of the link segment is reported in the LinkOK bit (Register 14, LineST, Bit 7). If the HC0E bit (Register 15, SelfCTL, Bit D) is clear, it is also indicated by the output of the $\overline{\text{LINKLED}}$ pin. If the link is "good", the LinkOK bit is set and the $\overline{\text{LINKLED}}$ pin is driven low. If the link is "bad" the LinkOK bit is clear and the $\overline{\text{LINKLED}}$ pin is high. To disable this feature, the host must set the DisableLT bit (Register 19, TestCTL, Bit 7). If DisableLT is set, the CS8900A will transmit and receive packets independent of the link segment.

3.11.5 Receive Polarity Detection and Correction

The CS8900A automatically checks the polarity of the receive half of the twisted pair cable. If the polarity is correct, the PolarityOK bit (Register 14, LineST, bit C) is set. If the polarity is reversed, the PolarityOK bit is clear. If the PolarityDis bit (Register 13, LineCTL, Bit C) is clear, the CS8900A automatically corrects a reversal. If the PolarityDis bit is set, the CS8900A does not correct a reversal. The PolarityOK bit and the PolarityDis bit are independent.

To detect a reversed pair, the receiver examines received link pulses and the End-of-Frame (EOF) sequence of incoming packets. If it detects at least one reversed link pulse and at least four frames in a row with negative polarity after the EOF, the receive pair is considered reversed. Any data received before the correction of the reversal is ignored.

3.11.6 Collision Detection

If half-duplex operation is selected (Register 19, Bit E, FDX), the CS8900A detects a 10BASE-T collision whenever the receiver and transmitter are active simultaneously. When a collision is present, the Collision Detection circuit informs the MAC by asserting the internal Collision signal (see Section 3.9 on page 28 for collision handling).

3.12 Attachment Unit Interface (AUI)

The CS8900A Attachment Unit Interface (AUI) provides a direct interface to external 10BASE2, 10BASE5, and 10BASE-FL Ethernet transceivers. It is fully compliant with Section 7 of the Ethernet standard (ISO/IEC 8802-3), and as such, is capable of driving a full 50-meter AUI cable.

The AUI consists of three pairs of signals: Data Out (DO+/DO-), Data In (DI+/DI-), and Collision In (CI+/CI-). To select the AUI, the host should set the AUI bit (Register 13, LineCTL, Bit 8). The AUI can also be selected automatically as described in the previous section (Section 3.10.4 on page 35). Figure 15 provides a block diagram of the AUI. (For a connection diagram, see Section 7.6 on page 121).

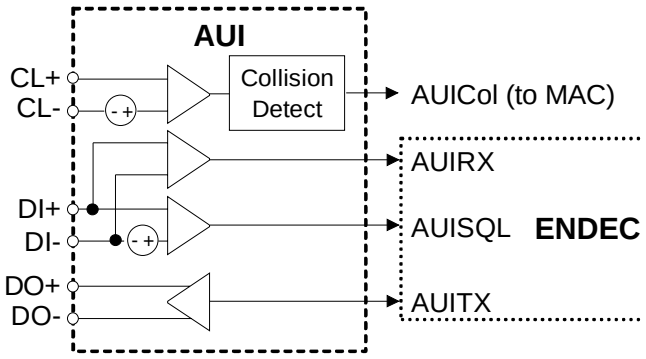

Figure 15. AUI

3.12.1 AUI Transmitter

The AUI transmitter is a differential driver designed to drive a 78 Ω cable. It accepts data from the ENDEC and transmits it directly on the DO+/DO- pins. After transmission has started, the CS8900A expects to see the packet "looped-back" (or echoed) to the receiver, causing the Carrier Sense signal to be asserted. This Carrier Sense presence indicates that the transmit signal is getting through to the transceiver. If the Carrier Sense signal remains deasserted throughout the transmis-

sion, or if the Carrier Sense signal is deasserted before the end of the transmission, there is a Loss-of-Carrier error and the Loss-of-CRS bit (Register 8, TxEvent, Bit 6) is set.

3.12.2 AUI Receiver

The AUI receiver is a differential pair circuit that connects directly to the DI+/DI- pins. It is designed to distinguish between transient noise pulses and incoming Ethernet packets. Incoming packets with proper amplitude and pulse width are passed on to the ENDEC section, while unwanted noise is rejected.

3.12.3 Collision Detection

The AUI collision circuit is a differential pair receiver that detects the presence of collision signals on the CI+/CI- pins. The collision signal is generated by an external Ethernet transceiver whenever a collision is detected on the Ethernet segment. (Section 7.3.1.2 of ISO/IEC 8802-3, 1993, defines the collision signal as a 10 MHz ± 15% signal with a duty cycle no worse than 60/40). When a collision is present, the AUI Collision circuit informs the MAC by asserting the internal Collision signal.

3.13 External Clock Oscillator

A 20-MHz quartz crystal or CMOS clock input is required by the CS8900A. If a CMOS clock input is used, it should be connected the to XTAL1 pin, with the XTAL2 pin left open. The clock signal should be 20 MHz ±0.01% with a duty cycle between 40% and 60%. The specifications for the crystal are described in Section 7.7 on page 121.

4.0 PACKETPAGE ARCHITECTURE

4.1 PacketPage Overview

The CS8900A architecture is based on a unique, highly-efficient method of accessing internal registers and buffer memory known as PacketPage. PacketPage provides a unified way of controlling the CS8900A in Memory or I/O space that minimizes CPU overhead and simplifies software. It provides a flexible set of performance features and configuration options, allowing designers to develop Ethernet circuits that meet their particular system requirements.

4.1.1 Integrated Memory

Central to the CS8900A architecture is a 4-Kbyte page of integrated RAM known as PacketPage memory. PacketPage memory is used for temporary storage of transmit and receive frames, and for internal registers. Access to this memory is done directly, through Memory space operations (Section 4.9 on page 74), or indirectly, through I/O space operations (Section 4.10 on page 76). In most cases, Memory Mode will provide the best overall performance, because ISA Memory operations require fewer cycles than I/O operations. I/O Mode is the CS8900A's default configuration and is used when memory space is not available or when special operations are required (e.g. waking the CS8900A from the Software Suspend State requires the host to write to the CS8900A's assigned I/O space).

The user-accessible portion of PacketPage memory is organized into the following six sections:

PacketPage Address	Contents
0000h - 0045h	Bus Interface Registers
0100h - 013Fh	Status and Control Registers
0140h - 014Fh	Initiate Transmit Registers
0150h - 015Dh	Address Filter Registers
0400h	Receive Frame Location
0A00h	Transmit Frame Location

4.1.2 Bus Interface Registers

The Bus Interface registers are used to configure the CS8900A's ISA-bus interface and to map the CS8900A into the host system's I/O and Memory space. Most of these registers are written only during initialization, remaining unchanged while the CS8900A is in normal operating mode. The exceptions to this are the DMA registers which are modified continually whenever the CS8900A is using DMA. These registers are described in more detail in Section 4.3 on page 42.

4.1.3 Status and Control Registers

The Status and Control registers are the primary means of controlling and getting status of the CS8900A. They are described in more detail in Section 4.4 on page 47.

4.1.4 Initiate Transmit Registers

The TxCMD/TxLength registers are used to initiate Ethernet frame transmission. These registers are described in more detail in Section 4.5 on page 71. (See Section 5.7 on page 99 for a description of frame transmission.)

4.1.5 Address Filter Registers

The Filter registers store the Individual Address filter and Logical Address filter used by the Destination Address (DA) filter. These registers are described in more detail in Section 4.6 on page 72. For a description of the DA filter, see Section 5.3 on page 87.

4.1.6 Receive and Transmit Frame Locations

The Receive and Transmit Frame PacketPage locations are used to transfer Ethernet frames to and from the host. The host simply writes to and reads from these locations and internal buffer memory is dynamically allocated between transmit and receive as needed. This provides more efficient use of buffer memory and better overall network performance. As a result of this dynamic allocation, only one receive frame (starting at PacketPage base + 0400h) and one transmit frame (starting at Pack-

etPage base + 0A00h) are directly accessible. See Section 4.7 on page 73.

4.2 PacketPage Memory Map

Table 12 shows the CS8900A PacketPage memory address map: s

PacketPage Address	# of Bytes	Type	Description	Cross Reference
Bus Interface Registers				
0000h	4	Read-only	Product Identification Code	Section 4.3 on page 42
0004h	28	-	Reserved	Note 2
0020h	2	Read/Write	I/O Base Address	Section 4.3 on page 42, Section 4.7 on page 73
0022h	2	Read/Write	Interrupt Number (0,1,2,or 3)	Section 3.2 on page 18, Section 4.3 on page 42
0024h	2	Read/Write	DMA Channel Number (0, 1, or 2)	Section 3.2 on page 18, Section 4.3 on page 42
0026h	2	Read-only	DMA Start of Frame	Section 4.3 on page 42, Section 5.4 on page 90
0028h	2	Read-only	DMA Frame Count (12 Bits)	Sections Section 4.3 on page 42, ”Receive DMA”
002Ah	2	Read-only	RxDMA Byte Count	Section 4.3 on page 42, Section 5.4 on page 90
002Ch	4	Read/Write	Memory Base Address Register (20 Bit)	Section 4.3 on page 42, Section 4.9 on page 74
0030h	4	Read/Write	Boot PROM Base Address	Section 3.6 on page 25, Section 4.3 on page 42
0034h	4	Read/Write	Boot PROM Address Mask	Section 3.6 on page 25, Section 4.3 on page 42
0038h	8	-	Reserved	Note 2
0040h	2	Read/Write	EEPROM Command	Section 3.5 on page 24, Section 4.3 on page 42
0042h	2	Read/Write	EEPROM Data	Section 3.5 on page 24, Section 4.3 on page 42
0044h	12	-	Reserved	Note 2
0050h	2	Read only	Received Frame Byte Counter	Section 4.3 on page 42, Section 5.2.9 on page 87
0052h	174	-	Reserved	Note 2
Status and Control Registers				
0100h	32	Read/Write	Configuration & Control Registers (2 bytes per regiseter)	Section 4.4 on page 47
0120h	32	Read-only	Status & Event Registers (2 bytes per register)	Section 4.4 on page 47
0140h	4	-	Reserved	Note 2
Initiate Transmit Registers				

Notes: 1. All registers are accessed as words only.

2. Read operation from the reserved location provides undefined data. Writing to a reserved location or undefined bits may result in unpredictable operation of the CS8900A.

Table 12. PacketPage Memory Address Map

PacketPage Address	# of Bytes	Type	Description	Cross Reference
0144h	2	Write-only	TxCMD (transmit command)	Section 4.5 on page 71, Section 5.7 on page 99
0146h	2	Write-only	TxLength (transmit length)	Section 4.5 on page 71, Section 5.7 on page 99
0148h	8	-	Reserved	Note 2
Address Filter Registers				
0150h	8	Read/Write	Logical Address Filter (hash table)	Section 4.6 on page 72, Section 5.3 on page 87
0158h	6	Read/Write	Individual Address	Section 4.6 on page 72, Section 5.3 on page 87
015Eh	674	-	Reserved	Note 2
Frame Location				
0400h	2	Read-only	RXStatus (receive status)	Section 4.7 on page 73, Section 5.2 on page 79
0402h	2	Read-only	RxLength (receive length, in bytes)	Section 4.7 on page 73, Section 5.2 on page 79
0404h	-	Read-only	Receive Frame Location	Section 4.7 on page 73, Section 5.2 on page 79
0A00	-	Write-only	Transmit Frame Location	Section 4.7 on page 73, Section 5.7 on page 99

Notes: 1. All registers are accessed as words only.

2. Read operation from the reserved location provides undefined data. Writing to a reserved location or undefined bits may result in unpredictable operation of the CS8900A.

Table 12. PacketPage Memory Address Map *(continued)*

4.3 Bus Interface Registers

4.3.1 Product Identification Code

(Read only, Address: PacketPage base + 0000h)

Address 0000h	Adress 0001h	Address 0002h	Address 00003h
First byte of EISA registration number for Crystal Semiconductor	Second byte of EISA registration number for Crystal Semiconductor	First 8 bits of Product ID number	Last 3 bits of the Product ID number (5 “X” bits are the revision number)

The Product Identification Code Register is located in the first four bytes of the PacketPage (0000h to 0003h). The register contains a unique 32-bit product ID code that identifies the chip as a CS8900A. The host can use this number to determine which software driver to load and to check which features are available.

Reset value is: 0000 1110 0110 0011 0000 0000 000X XXXX

The X XXXX codes for the CS8900A are:
Rev B: 0 0111

4.3.2 I/O Base Address

(Read/Write, Address: PacketPage base + 0020h)

Address 0021h	Address 0020h
Most significant byte of I/O Base Address	Least significant byte of I/O Base Address

The I/O Base Address Register describes the base address for the sixteen contiguous locations in the host system’s I/O space, which are used to access the PacketPage registers. See Section 4.10 on page 76. The default location is 0300h.

After reset, if no EEPROM is found by the CS8900A, then the register has the following initial state. If an EEPROM is found, then the register’s initial value may be set by the EEPROM. See Section 3.3 on page 19.

Reset value is: 0000 0011 0000 0000

4.3.3 Interrupt Number

(Read/Write, Address: PacketPage base + 0022h)

Address 0023h	Address 0022h
00h	Interrupt number assignment: 0000 0000b= pin INTRQ0 0000 0001b= pin INTRQ1 0000 0010b= pin INTRQ2 0000 0011b= pin INTRQ3 0000 01XXb= All INTRQ pins high-impedence

The Interrupt Number Register defines the interrupt pin selected by the CS8900A. In a typical application the following bus signals are tied to the following pins:

Bus signal	Typical pin connection
IRQ5	INTRQ3
IRQ10	INTRQ0
IRQ11	INTRQ1
IRQ12	INTRQ2

See Section 3.2 on page 18.

After reset, if no EEPROM is found by the CS8900A, then the register has the following initial state, which corresponds to placing all the INTRQ pins in a high-impedance state. If an EEPROM is found, then the register's initial value may be set by the EEPROM. See Section 3.3 on page 19.

Reset value is: XXXX XXXX XXXX X100

4.3.4 DMA Channel Number

(Read/Write, Address: PacketPage base + 0024h)

Address 0025h	Address 0024h
00h	DMA channel assignment: 0000 0000b= pin DMRQ0 and $\overline{\text{DMACK0}}$ 0000 0001b= pin DMRQ1 and $\overline{\text{DMACK1}}$ 0000 0010b= pin DMRQ2 and $\overline{\text{DMACK2}}$ 0000 0011b= All DMRQ pins high-impedence

The DMA Channel register defines the DMA pins selected by the CS8900A. In the typical application, the following bus signals are tied to the following pins:

Bus signal	Typical pin connection
$\frac{\text{DRQ5}}{\text{DACK5}}$	$\frac{\text{DMRQ0}}{\text{DMACK0}}$
$\frac{\text{DRQ6}}{\text{DACK6}}$	$\frac{\text{DMRQ1}}{\text{DMACK1}}$
$\frac{\text{DRQ7}}{\text{DACK7}}$	$\frac{\text{DMRQ2}}{\text{DMACK2}}$

See Section 3.2 on page 18 and Section 5.4 on page 90.

After reset, if no EEPROM is found by the CS8900A, then the register has the following initial state which corresponds to setting all DMRQ pins to high-impedance. If a EEPROM is found, then the register's initial value may be set by the EEPROM. See Section 3.3 on page 19.

Reset value is: XXXX XXXX XXXX XX11

4.3.5 DMA Start of Frame

(Read only, Address: PacketPage base + 0026h)

Address 0027h	Address 0026h
Most significant byte of offset value	Least significant byte of offset value

The DMA Start of Frame Register contains a 16-bit value which defines the offset from the DMA base address to the start of the most recently transferred received frame. See Section 5.4 on page 90.

Reset value is: 0000 0000 0000 0000

4.3.6 DMA Frame Count

(Read only, Address: PacketPage base + 0028h)

Address 0029h	Address 0028h
Most significant byte of frame count (most-significnant nibble always 0h)	Least significant byte of frame count

The lower 12 bits of the DMA Frame Count register define the number of valid frames transferred via DMA since the last readout of this register. The upper 4 bits are reserved. See Section 5.4 on page 90.

Reset value is: XXXX 0000 0000 0000

4.3.7 RxDMA Byte Count

(Read only, Address: PacketPage base + 002Ah)

Address 002Bh	Address 002Ah
Most significant byte of byte count	Least significant byte of byte count

The RxDMA Byte Count register describes the valid number of bytes DMAed since the last readout. See Section 5.4 on page 90.

Reset value is: 0000 0000 0000 0000

4.3.8 Memory Base Address

(Read/Write, Address: PacketPage base + 002Ch)

Address 002Fh	Address 002Eh	Address 002Dh	Address 002Ch
Reserved	The most significant nibble of memory base address. The high-order nibble is reserved.	Contains portion of memory base address.	The least significant byte of the memory base address.

Memory Base Address: The lower three bytes (002Ch, 002Dh, and 002Eh) are used for the 20-bit memory base address. The upper three nibbles are reserved.

After reset, if no EEPROM is found by the CS8900A, then the register has the following initial state. If an EEPROM is found, then the register's initial value may be set by the EEPROM. See Section 3.3 on page 19.

Reset value is: XXXX XXXX XXXX 0000 0000 0000 0000 0000

4.3.9 Boot PROM Base Address

(Read/Write, Address: PacketPage base + 0030h)

Address 0033h	Address 0032h	Address 0031h	Address 0030h
Reserved	The most significant nibble of Boot PROM base address. The high-order nibble is reserved.	Contains portion of Boot PROM base address.	The least significant byte of the Boot PROM base address.

The lower three bytes (0030h, 0031h, and 0032h) of the Boot PROM Base Address register are used for the 20-bit Boot PROM base address. The upper three nibbles are reserved. See Section 3.6 on page 25.

After reset, if no EEPROM is found by the CS8900A, then the register has the following initial state. If an EEPROM is found, then the register's initial value may be set by the EEPROM. See Section 3.3 on page 19.

Reset value is: XXXX XXXX XXXX 0000 0000 0000 0000 0000

4.3.10 Boot PROM Address Mask

(Read/Write, Address: PacketPage base + 0034h)

Address 0037h	Address 0036h	Address 0035h	Address 0034h
Reserved	The most significant nibble of Boot PROM mask address. The high-order nibble is reserved.	Contains portion of Boot PROM mask address. The lower-order nibble must be written as 0h.	The least significant byte of the Boot PROM mask address. Must be written as 00h.

The Boot PROM address mask register indicates the size of the attached Boot PROM and is limited to 4K bit increments. The lower 12 bits of the Address Mask are ignored, and should be 000h. The next lowest-order bits describe the size of the PROM. The upper three nibbles are reserved.

For example:

Size of Boot PROM	Register value
4k bits	XXXX XXXX XXXX 1111 1111 0000 0000 0000
8k bits	XXXX XXXX XXXX 1111 1110 0000 0000 0000
16k bits	XXXX XXXX XXXX 1111 1100 0000 0000 0000

See Section 3.6 on page 25.

After reset, if no EEPROM is found by the CS8900A, then the register has the following initial state. If an EEPROM is found, then the register's initial value may be set by the EEPROM. See Section 3.3 on page 19.

Reset value is: XXXX XXXX XXXX 0000 0000 0000 0000 0000

4.3.11 EEPROM Command

(Read/Write, Address: PacketPage base + 0040h)

7	6	5	4	3	2	1	0
ADD7 to ADD0							
F	**E**	**D**	**C**	**B**	**A**	**9**	**8**
Reserved					ELSEL	OB1	OB0

This register is used to control the reading, writing and erasing of the EEPROM. See Section 3.5.

ADD7-ADD0 Address of the EEPROM word being accessed.

OB1,OB0 Indicates the Opcode of the command being executed. See Table 7.

ELSEL External logic select: When clear, the EECS pin is used to select the EEPROM. When set, the $\overline{\text{ELCS}}$ pin is used to select the external LA decode circuit.

Reserved Reserved and must be written as 0.

Reset value is: XXXX XXXX XXXX XXXX

4.3.12 EEPROM Data

(Read/Write, Address: PacketPage base + 0042h)

Address 0043h	Address 0042h
Most significant byte of the EEPROM data.	Least significant byte of the EEPROM data.

This register contains the word being written to, or read from, the EEPROM. See Section 3.5 on page 24.

Reset value is: XXXX XXXX XXXX XXXX

4.3.13 Receive Frame Byte Counter

(Read only, Address: PacketPage base + 0050h)

Address 0051h	Address 0050h
Most significant byte of the byte count.	Least significant byte of the byte count.

This register contains the count of the total number bytes received in the the current received frame. This count continuously increments as more bytes in this frame are received. See Section 5.2.9 on page 87.

Reset value is: XXXX XXXX XXXX XXXX

4.4 Status and Control Registers

The Status and Control registers are the primary registers used to control and check the status of the CS8900A. They are organized into two groups: Configuration/Control Registers and Status/Event Registers. All Status and Control Registers are 16-bit words as shown in Figure 16. Bit 0 indicates whether it is a Configuration/Control Register (Bit 0 = 1) or a Status/Event Register (Bit 0 = 0). Bits 0 through 5 provide an internal address code that describes the exact function of the register. Bits 6 through F are the actual Configuration/Control and Status/Event bits.

4.4.1 Configuration and Control Registers

Configuration and Control registers are used to set-up the following:

- how frames will be transmitted and received;
- which frames will be transmitted and received;
- which events will cause interrupts to the host processor; and,
- how the Ethernet physical interface will be configured.

These registers are read/write and are designated by odd numbers (e.g. Register 1, Register 3, etc.).

The Transmit Command Register (TxCMD) is a special type of register. It appears in two separate locations in the PacketPage memory map. The first location, PacketPage base + 0108h, is within the block of Configuration/Control Registers and is read-only. The second location, PacketPage base + 0144h, is where the actual transmit commands are issued and is write-only. See Section 4.4.4 on page 49 (Register 9) and Section 5.7 on page 99 for a more detailed description of the TxCMD register.

4.4.2 Status and Event Registers

Status and Event registers report the status of transmitted and received frames, as well as information about the configuration of the CS8900A. They are read-only and are designated by even numbers (e.g. Register 2, Register 4, etc.).

The Interrupt Status Queue (ISQ) is a special type of Status/Event register. It is located at PacketPage base + 0120h and is the first register the host reads when responding to an Interrupt.

A more detailed description of the ISQ can be found in Section 5.1 on page 79.

Three 10-bit counters are included with the Status and Event registers. RxMISS counts missed receive frames, TxCOL counts transmit collisions, and TDR is a time domain reflectometer useful in locating cable faults. The following sections contain more information about these counters.

Table 13 provides a summary of PacketPage Register types.

4.4.3 Status and Control Bit Definitions

This section provides a description of the special bit types used in the Status and Control registers.

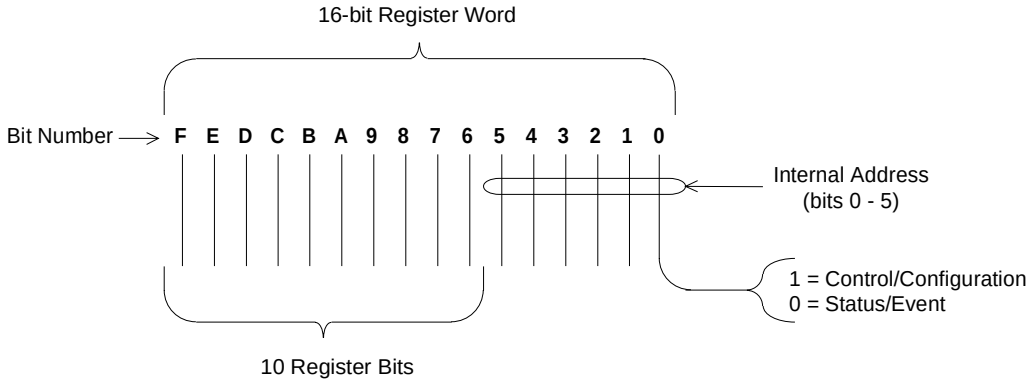

Figure 16. Status and Control Register Format

Suffix	Type	Description	Comments
CMD	Read/Write	**Command:** Written once per frame to initiate transmit.	
CFG	Read/Write	**Configuration:** Written at setup and used to determine what frames will be transmitted and received and what events will cause interrupts.	
CTL	Read/Write	**Control:** Written at setup and used to determine what frames will be transmitted and received and how the physical interface will be configured.	
Event	Read-only	**Event:** Reports the status of transmitted and received frames.	cleared when read
ST	Read-only	**Status:** Reports information about the configuration of the CS8900A.	
	Read-only	**Counters:** Counts missed receive frames and collisions. Provides time domain for locating coax cable faults.	cleared when read

Table 13. PacketPage Register Types

Section 4.4.4 on page 49 provides a detailed description of the bits in each register.

4.4.3.1 Act-Once Bits

There are four bits that cause the CS8900A to take a certain action only once when set. These "Act-Once" bits are: Skip_1 (Register 3, RxCFG, Bit 6), RESET (Register 15, SelfCTL, Bit 6), ResetRxDMA (Register 17, BusCTL, Bit 6), and SWint-X (Register B, BufCFG, Bit 6). To cause the action again, the host must set the bit again. Act-Once bits are always read as clear.

4.4.3.2 Temporal Bits

Temporal bits are bits that are set and cleared by the CS8900A without intervention of the host processor. This includes all status bits in the three status registers (Register 14, LineST; Register 16, SelfST; and, Register 18, BusST), the RxDest bit (Register C, BufEvent, Bit F), and the Rx128 bit (Register C, BufEvent, Bit B). Like all Event bits, RxDest and Rx128 are cleared when read by the host.

4.4.3.3 Interrupt Enable Bits and Events

Interrupt Enable bits end with the suffix iE and are located in three Configuration registers: RxCFG (Register 3), TxCFG (Register 7), and BufCFG (Register B). Each Interrupt Enable bit corresponds to a specific event. If an Interrupt Enable bit is set and its corresponding event occurs, the CS8900A generates an interrupt to the host processor.

The bits that report when various events occur are located in three Event registers and two counters. The Event registers are RxEvent (Register 4), TxEvent (Register 8), and BufEvent (Register C). The counters are RxMISS (Register 10) and TxCOL (Register 12). Each Interrupt Enable bit and its associated Event are identified in Table 14.

An Event bit will be set whenever the specified event happens, whether or not the associated Interrupt Enable bit is set. All Event registers are cleared upon read-out by the host.

4.4.3.4 Accept Bits

There are nine Accept bits located in the RxCTL register (Register 5), each of which is followed by the suffix A. Accept bits indicate which types of frames will be accepted by the CS8900A. (A frame is said to be "accepted" by the CS8900A when the frame data are placed in either on-chip memory, or in host memory by DMA.) Four of these bits have corresponding Interrupt Enable (iE) bits. An Accept bit and an Interrupt Enable bit are independent

Interrupt Enable Bit (register name)	Event Bit or Counter (register name)
ExtradataiE (RxCFG)	Extradata (RxEvent)
RuntiE (RxCFG)	Runt (RxEvent)
CRCerroriE (RxCFG)	CRCerror (RxEvent)
RxOKiE (RxCFG)	RxOK (RxEvent)
16colliE (TxCFG)	16coll (TxEvent)
AnycolliE (TxCFG)	"Number-of Tx-collisions" counter is incremented (TxEvent)
JabberiE (TxCFG)	Jabber (TxEvent)
Out-of-windowiE (TxCFG)	Out-of-window (TxEvent)
TxOKiE (TxCFG)	TxOK (TXEvent)
SQEerroriE (TxCFG)	SQEerror (TxEvent)
Loss-of-CRSiE (TxCFG)	Loss-of-CRS (TxEvent)
MissOvfloiE (BufCFG)	RxMISS counter overflows past 1FFh
TxColOvfloiE (BufCFG)	TxCOL counter overflows past 1FFh
RxDestiE (BufCFG)	RxDest (BufEvent)
Rx128iE (BufCFG)	Rx128 (BufEvent)
RxMissiE (BufCFG)	RxMISS (BufEvent)
TxUnderruniE (BufCFG)	TxUnderrun (BufEvent)
Rdy4TxiE (BufCFG)	Rdy4Tx (BufEvent)
RxDMAiE (BufCFG)	RxDMAFrame (BufEvent)

Table 14. Interrupt Enable Bits and Events

operations. It is possible to set either, neither, or both bits. The four corresponding pairs of bits are:

IE Bit in RxCFG	A Bit in RxCTL
ExtradataiE	ExtradataA
RuntiE	RuntA
CRCerroriE	CRCerrorA
RxOKiE	RxOKA

If one of the above Interrupt Enable bits is set and the corresponding Accept bit is clear, the CS8900A generates an interrupt when the associated receive event occurs, but then does not accept the receive frame (the length of the receive frame is set to zero).

The other five Accept bits in RxCTL are used for destination address filtering (see Section 5.3 on page 87). The Accept mechanism is explained in more detail in Section 5.2 on page 79.

4.4.4 Status and Control Register Summary

The table on the following page (Table 15) provides a summary of the Status and Control registers. Section 4.4.4 on page 49 gives a detailed description of each Status and Control register.

Control and Configuration Bits										Register	
F	E	D	C	B	A	9	8	7	6	Number (Offset)	Name
Reserved (register contents undefined)										1	
	Extra dataiE	RuntiE	CRC erroriE	Buffer CRC	AutoRx DMAE	RxDMA only	RxOKiE	StreamE	Skip_1	3 (0102h)	RxCFG
	Extra dataA	RuntA	CRC errorA	Broad castA	Individ ualA	Multi castA	RxOKA	Promis cuousA	IAHash A	5 (0104h)	RxCTL
16colli E				AnycolliE	Jab beriE	Out-of-windowiE	TxOKiE	SQErro-riE	Loss-of-CRSiE	7 (0106h)	TxCFG
		TxPad-Dis	Inhibit-CRC			Onecoll	Force	TxStart		9 (0108h)	TxCMD
RxD-estiE		Miss OvfloiE	TxCol OvfloiE	Rx128iE	Rxmis-siE	TxUnder-runiE	Rdy4TxiE	RxD-MAiE	SWint-X	B (010Ah)	BufCFG
Reserved (register contents undefined)										D-11	
	LoRx Squelch	2-part DefDis	Polarity Dis	Mod BackoffE		AutoAUI/ 10BT	AUIonly	Ser TxON	Ser RxON	13 (0112h)	Line CTL
HCB1	HCB0	HC1E	HC0E		HWStan dbyE	HW SleepE	SW Sus-pend		RESET	15 (0114h)	SelfCTL
Enable IRQ		RxDMA size	IOCH RDYE	DMA Burst	Memo-ryE	UseSA	DMAex-tend		Reset RxDMA	17 (0116)	BusCTL
	FDX			Disable Backoff	AUIloop	ENDEC loop		Disable LT		19 (0118)	TestCTL
Reserved (register contents undefined)										1B -1F	

Table 15. Status and Control Register Descriptions

Status and Event Bits										Register	
F	**E**	**D**	**C**	**B**	**A**	**9**	**8**	**7**	**6**	**Number (Offset)**	**Name**
Interrupt Status Queue										0 (0120h)	ISQ
Reserved (register contents undefined)										2	
	Extra data	Runt	CRC error	Broad-cast	Individ-ual Adr	Hashed	RxOK	Dribble bits	IAHash	4 (0124h)	Rx Event
Hash Table Index (alternate RxEvent meaning if Hashed = 1 and RxOK = 1)						Hashed	RxOK	Dribble bits	IAHash	4 (0124h)	Rx Eventalt
Reserved (register contents undefined)										6	
16coll	Number-of-Tx-collisions				Jabber	Out-of-Window	TxOK	SQE error	Loss-of-CRS	8 (0128h)	TxEvent
Reserved (register contents undefined)										A	
Rx Dest				Rx128	RxMiss	TxUnder-run	Rdy4Tx	RxDMA Frame	SWint	C (012Ch)	Buf Event
Reserved (register contents undefined)										E	
10-bit Receive Miss (RxMISS) counter, cleared when read										10 (0130h)	RxMISS
10-bit Transmit Collision (TxCOL) counter, cleared when read										12 (0132h)	TxCOL
	CRS		Polarity OK			10BT	AUI	LinkOK		14 (0134h)	LineST
			EESize	EL present	EEPRO M OK	EEPRO Mpresent	SIBUSY	INITD	3.3 V Active	16 (0136h)	SelfST
							Rdy4Tx NOW	TxBid Err		18 (0138h)	BusST
Reserved (register contents undefined)										1A	
10-bit AUI Time Domain Reflectometer (TDR) counter, cleared when read										1C (013Ch)	TDR
Reserved (register contents undefined)										1E	

Table 15. Status and Control Register Descriptions *(continued)*

4.4.5 Register 0: Interrupt Status Queue

(ISQ, Read-only, Address: PacketPage base + 0120h)

7	6	5	4	3	2	1	0
RegContent		RegNum					

F	E	D	C	B	A	9	8
RegContent							

The Interrupt Status Queue Register is used in both Memory Mode and I/O Mode to provide the host with interrupt information. Whenever an event occurs that triggers an enabled interrupt, the CS8900A sets the appropriate bit(s) in one of five registers, maps the contents of that register to the ISQ register, and drives an IRQ pin high. Three of the registers mapped to ISQ are event registers: RxEvent (Register 4), TxEvent (Register 8), and BufEvent (Register C). The other two registers are counter-overflow reports: RxMISS (Register 10) and TxCOL (Register 12). In Memory Mode, ISQ is located at PacketPage base + 120h. In I/O Mode, ISQ is located at I/O Base + 0008h. See Section 5.1 on page 79.

RegNum The lower six bits describe which register (4, 8, C, 10 or 12) is contained in the ISQ.

RegContent The upper ten bits contain the register data contents.

Reset value is: 0000 0000 0000 0000

4.4.6 Register 3: Receiver Configuration

(RxCFG, Read/Write, Address: PacketPage base + 0102h)

7	6	5	4	3	2	1	0
StreamE	Skip_1	000011					

F	E	D	C	B	A	9	8
	ExtradataiE	RuntiE	CRCerroriE	BufferCRC	AutoRx DMAE	RxDMA only	RxOKiE

RxCFG determines how frames will be transferred to the host and what frame types will cause interrupts.

000011 — These bits provide an internal address used by the CS8900A to identify this as the Reveiver Configuration Register.

Skip_1 — When set, this bit causes the last committed received frame to be deleted from the receive buffer. To skip another frame, the host must rewrite a “1” to this bit. This bit is not to be used if RxDMAonly (Bit 9) is set. Skip_1 is an Act-Once bit. See Section 5.2.5 on page 84.

StreamE — When set, StreamTransfer mode is used to transfer receive frames that are back-to-back *and* that pass the Destination Address filter (see Section 5.3 on page 87). When StreamE is clear, StreamTransfer mode is not used. This bit must not be set unless either bit AutoRxDMA or bit RXDMAonly is set.

RxOKiE — When set, there is an RxOK Interrupt if a frame is received without errors. RxOK interrupt is not generated when DMA mode is used for frame reception.

RxDMAonly — The Receive-DMA mode is used for all receive frames when this bit is set.

AutoRxDMAE — When set, the CS8900A will automatically switch to Receive-DMA mode if the conditions specified in Section 5.5 on page 93 are met. RxDMAonly (Bit 9) has precedence over AutoRxDMAE.

BufferCRC — When set, the received CRC is included with the data stored in the receive-frame buffer, and the four CRC bytes are included in the receive-frame length (PacketPage base + 0402h). When clear, neither the receive buffer nor the receive length include the CRC.

CRCerroriE — When set, there is a CRCerror Interrupt if a frame is received with a bad CRC.

RuntiE — When set, ther is a Runt Interrupt if a frame is received that is shorter than 64 bytes. The CS8900A always discards any frame that is shorter than 8 bytes.

ExtradataiE — When set, there is an Extradata Interrupt if a frame is received that is longer than 1518 bytes. The operation of this bit is independent of the received packet integrity (good or bad CRC).

After reset, if no EEPROM is found by the CS8900A, then the register has the following initial state. If an EEPROM is found, then the register’s initial value may be set by the EEPROM. See Section 3.3 on page 19.

Reset value is: 0000 0000 0000 0011

4.4.7 Register 4: Receiver Event

(RxEvent, Read-only, Address: PacketPage base + 0124h)

7	6	5	4	3	2	1	0
Dribblebits	IAHash	000100					

F	E	D	C	B	A	9	8
	Extradata	Runt	CRCerror	Broadcast	Individual Adr	Hashed	RxOK

Alternate meaning if bits 8 and 9 are both set (see Section 5.3 on page 87 for exception regarding Broadcast frames).

7	6	5	4	3	2	1	0
Dribblebits	IAHash	000100					

F	E	D	C	B	A	9	8
Hash Table Index (see Section 5.3 on page 87)						Hashed = 1	RxOK = 1

RxEvent reports the status of the current received frame.

000100 — These bits identify this as the Receiver Event Register. When reading this register, these bits will be 000100, where the LSB corresponds to Bit 0.

IAHash — If the received frame's Destination Address is accepted by the hash filter, then this bit is set if, and only if IAHashA (Register 5, RxCTL, Bit 6) is set, and Hashed (Bit 9) is set. See Section 5.3 on page 87.

Dribblebits — If set, the received frame had from one to seven bits after the last received full byte. An "Alignment Error" occurs when Dribblebits and CRCerror (Bit C) are both set.

RxOK — If set, the received frame had a good CRC and valid length (i.e., there is not a CRC error, Runt error, or Extradata error). When RxOK is set, then the length of the received frame is contained at PacketPage base + 0402h. If RxOKiE (Register 3, RxCFG, Bit 8) is set, there is an interrupt.

Hashed — If set, the received frame had a Destination Address that was accepted by the hash filter. If Hashed and RxOK (Bit 8) are set, Bits F through A of RxEvent become the Hash Table Index for this frame [See Section 5.3 on page 87 for an exception regarding broadcast frames!].If Hashed and RxOK are not both set, then Bits F through A are individual event bits as defined below.

IndividualAdr — If the received frame had a Destination Address which matched the Individual Address found at PacketPage base + 0158h, then this bit is set if, and only if, RxOK (Bit 8) is set and IndividualA (Register 5, RxCTL, Bit A) is set.

Broadcast — If the received frame had a Broadcast Address (FFFF FFFF FFFFh) as the Destination Address, then this bit is set if, and only if, RxOK is set and BroadcastA (Register 5, RxCTL, Bit B) is set.

CRCerror — If set, the received frame had a bad CRC. If CRCerroriE (Register 3, RxCFG, Bit C) is set, there is an interrupt

Runt — If set, the received frame was shorter than 64 bytes. If RuntiE (Register 3, RxCFG, Bit D) is set, there is an interrupt.

Extradata — If set, the received frame was longer than 1518 bytes. All bytes beyond 1518 are discarded. If ExtradataiE (Register 3, RxCFG, Bit E) is set, there is an interrupt.

Reset value is: 0000 0000 0000 0100

Notes: 3. All RxEvent bits are cleared upon readout. The host is responsible for processing all event bits.

4. RxStatus register (PacketPage base + 0400h) is the same as the RxEvent register except RxStatus is not cleared when RxEvent is read. See Section 5.2 on page 79. The value in the RxEvent register is undefined when RxDMAOnly bit (Bit 9, Register 3, RxCFG) is set.

4.4.8 Register 5: Receiver Control

(RxCTL, Read/Write, Address: PacketPage base +0104h)

7	6	5	4	3	2	1	0
PromiscuousA	IAHashA	000101					
F	**E**	**D**	**C**	**B**	**A**	**9**	**8**
	ExtradataA	RuntA	CRCerrorA	BroadcastA	IndividualA	MulticastA	RxOKA

RxCTL has two functions: Bits 8, C, D, and E define what types of frames to accept. Bits 6, 7, 9, A, and B configure the Destination Address filter. See Section 5.3 on page 87.

000101 — These bits provide an internal address used by the CS8900A to identify this as the Receiver Control Register. For a received frame to be accepted, the Destination Address of that frame must pass the filter criteria found in Bits 6, 7, 9, A, and B (see Section 5.3 on page 87).

IAHashA — When set, receive frames are accepted when the Destination Address is an Individual Address that passes the hash filter.

PromiscuousA — Frames with any address are accepted when this bit is set.

RxOKA — When set, the CS8900A accepts frames with correct CRC and valid length (valid length is: 64 bytes <= length <= 1518 bytes).

MulticastA — When set, receive frames are accepted if the Destination Address is an Multicast Address that passes the hash filter.

IndividualA — When set, receive frames are accepted if the Destination Address matches the Individual Address found at PacketPage base + 0158h to PacketPage base + 015Dh.

BroadcastA — When set, receive frames are accepted if the Destination Address is FFFF FFFF FFFFh.

CRCerrorA — When set, receive frames that pass the Destination Address filter, but have a bad CRC, are accepted. When clear, frames with bad CRC are discarded. See Note 5.

RuntA — When set, receive frames that are smaller than 64 bytes, and that pass the Destination Address filter are accepted. When clear, received frames less that 64 bytes in length are discarded. The CS8900A discards any frame that is less than 8 bytes. See Note 5.

ExtradataA — When set, receive frames longer than 1518 bytes and that pass the Destination Address filter are accepted. The CS8900A accepts only the first 1518 bytes and ignores the rest. When clear, frames longer than 1518 bytes are discarded. See Note 5.

After reset, if no EEPROM is found by the CS8900A, then the register has the following initial state. If an EEPROM is found, then the register's initial value may be set by the EEPROM. See Section 5.3 on page 87.

Reset value is: 0000 0000 0000 0101

Notes: 5. Typically, when bits CRCerrorA, RuntA and ExtradataA are cleared (meaning bad frames are being discarded), then the corresponding bits CRCerroriE, RuntiE and ExtradataiE should be set in register 3 (Receiver Configuration register) to allow the device driver to keep track of discarded frames.

4.4.9 Register 7: Transmit Configuration

(TxCFG, Read/Write, Address: PacketPage base + 0106h)

7	6	5	4	3	2	1	0
SQE erroriE	Loss-of-CRSiE	000111					

F	E	D	C	B	A	9	8
16colliE				AnycolliE	JabberiE	Out-of-window	TxOKiE

Each bit in TxCFG is an interrupt enable. When set, the interrupt is enabled as described below. When clear, there is no interrupt.

000111 — These bits provide an internal address used by the CS8900A to identify this as the Transmit Configuration Register.

Loss-of-CRSiE — If the CS8900A starts transmitting on the AUI and does not see the Carrier Sense signal at the end of the preamble, an interrupt is generated if this bit is set. Carrier Sense activity is reported by the CRS bit (Register 14, LineST, Bit E).

SQErroriE — When set, an interrupt is generated if there is an SQE error. (At the end of a transmission on the AUI, the CS8900A expects to see a collision within 64 bit times. If this does not happen, there is an SQE error.)

TxOKiE — When set, an interrupt is generated if a packet is completely transmitted.

Out-of-windowiE — When set, an interrupt is generated if a late collision occurs (a late collision is a collision which occurs after the first 512 bit times). When this occurs, the CS8900A forces a bad CRC and terminates the transmission.

JabberiE — When set, an interrupt is generated if a transmission is longer than approximately 26 ms.

AnycolliE — When set, if one or more collisions occur during the transmission of a packet, an interrupt occurs at the end of the transmission

16colliE — If the CS8900A encounters 16 normal collisions while attempting to transmit a particular packet, the CS8900A stops attempting to transmit that packet. When this bit is set, there is an interrupt upon detecting the 16th collision.

After reset, if no EEPROM is found by the CS8900A, then the register has the following initial state. If an EEPROM is found, then the register's initial value may be set by the EEPROM. See Section 3.3 on page 19.

Reset value is: 0000 0000 0000 0111

Notes: Bit 8 (TxOKiE) and Bit B (AnycolliE) are interrupts for normal transmit operation. Bits 6, 7, 9, A, and F are interrupts for abnormal transmit operation.

4.4.10 Register 8: Transmitter Event

(TxEvent, Read-only, Address: PacketPage base + 0218h)

7	6	5	4	3	2	1	0
SQEerror	Loss-of-CRS	001000					

F	E	D	C	B	A	9	8
16coll	Number-of-Tx-collisions				Jabber	Out-of-window	TxOK

TxEvent gives the event status of the last packet transmitted.

001000 — These bits provide an internal address used by the CS8900A to identify this as the Transmitter Event Register.

Loss-of-CRS — If the CS8900A is transmitting on the AUI and doesn't see Carrier Sense (CRS) at the end of the preamble, there is a Loss-of-Carrier error and this bit is set. If Loss-of-CRSiE (Register 7, TxCFG, Bit 6) is set, there is an interrupt.

SQEerror — At the end of a transmission on the AUI, the CS8900A expects to see a collision within 64 bit times. If this does not happen, there is an SQE error and this bit is set. If SQEerroriE (Register 7, TxCFG, Bit 7) is set, there is an interrupt.

TxOK — This bit is set if the last packet was completely transmitted (Jabber (Bit A), out-of-window-collision (Bit 9), and 16Coll (Bit F) must all be clear). If TxOKiE (Register 7, TxCFG, Bit 8) is set, there is an interrupt.

Out-of-Window — This bit is set if a collision occurs more than 512 bit times after the first bit of the preamble. When this occurs, the CS8900A forces a bad CRC and terminates the transmission. If Out-of-window-iE (Register 7, TxCFG, Bit 9) is set, there is an interrupt

Jabber — If the last transmission is longer than 26 msec, then the packet output is terminated by the jabber logic and this bit is set. If JabberiE (Register 7, TxCFG, Bit A) is set, there is an interrupt.

#-of-TX-collisions — These bits give the number of transmit collisions that occurred on the last transmitted packet. Bit B is the LSB. If AnycolliE (Register 7, TxCFG, Bit B) is set, there is an interrupt when any collision occurs.

16coll — This bit is set if the CS8900A encounters 16 normal collisions while attempting to transmit a particular packet. When this happens, the CS8900A stops further attempts to send that packet. If 16colliE (Register 7, TxCFG, Bit F) is set, there is an interrupt.

Reset value is: 0000 0000 0000 1000

Notes: 1.In any event register, like TxEvent, all bits are cleared upon readout. The host is responsible for processing all event bits.
2.TxOK (Bit 8) and the Number-of-Tx-Collisions (Bits E-B) are used in normal packet transmission.All other bits (6, 7, 9, A, and F) give the status of abnormal transmit operation.

4.4.11 Register 9: Transmit Command Status

(TxCMD, Read-only, Address: PacketPage base + 0108h)

7	6	5	4	3	2	1	0
TxStart		001001					

F	E	D	C	B	A	9	8
		TxPadDis	InhibitCRC			Onecoll	Force

This register contains the latest transmit command which tells the CS8900A how the next packet should be sent. The command must be written to PacketPage base + 0144h in order to initiate a transmission. The host can read the command from register 9 (PacketPage base + 0108h). See Section 5.7 on page 99.

001001 — These bits provide an internal address used by the CS8900A to identify this as the Transmit Command Register. When reading this register, these bits will be 001001, where the LSB corresponds to Bit 0.

TxStart — This pair of bits determines how many bytes are transferred to the CS8900A before the MAC starts the packet transmit process.

Bit 7	Bit 6	
0	0	Start transmission after 5 bytes are in the CS8900A
0	1	Start transmission after 381 bytes are in the CS8900A
1	0	Start transmission after 1021 bytes are in the CS8900A
1	1	Start transmission after the entire frame is in the CS8900A

Force — When set in conjunction with a new transmit command, any transmit frames waiting in the transmit buffer are deleted. If a previous packet has started transmission, that packet is terminated within 64 bit times with a bad CRC.

Onecoll — When this bit is set, any transmission will be terminated after only one collision. When clear, the CS8900A allows up to 16 normal collisions before terminating the transmission.

InhibitCRC — When set, the CRC is not appended to the transmission.

TxPadDis — When TxPadDis is clear, if the host gives a transmit length less than 60 bytes and InhibitCRC is set, then the CS8900A pads to 60 bytes. If the host gives a transmit length less than 60 bytes and InhibitCRC is clear, then the CS8900A pads to 60 bytes and appends the CRC.

When TxPadDis is set, the CS8900A allows the transmission of runt frames (a frame less than 64 bytes). If InhibitCRC is clear, the CS8900A appends the CRC. If InhibitCRC is set, the CS8900A does not append the CRC

After reset, if no EEPROM is found by the CS8900A, then the register has the following initial state. If an EEPROM is found, then the register's initial value may be set by the EEPROM. See Section 3.3 on page 19.

Regster value is: 0000 0000 0000 1001

Notes: The CS8900A does not transmit a frame if TxLength < 3

4.4.12 Register B: Buffer Configuration

(BufCFG, Read/Write, Address: PacketPage base + 010Ah)

7	6	5	4	3	2	1	0
RxDMAiE	SWint-X	001011					

F	E	D	C	B	A	9	8
RxDestiE		Miss OvfloiE	TxCol OvfloiE	Rx128iE	RxMissiE	TxUnder runtiE	Rdy4TxiE

Each bit in BufCFG is an interrupt enable. When set, the interrupt described below is enabled. When clear, there is no interrupt.

001011 — These bits provide an internal address used by the CS8900A to identify this as the Buffer Configuration Register.

SWint-X — When set, there is an interrupt requested by the host software. The CS8900A provides the interrupt, and sets the SWint (Register C, BufEvent, Bit 6) bit. The CS8900A acts upon this command at once. SWint-X is an Act-Once bit. To generate another interrupt, rewrite a "1" to this bit.

RxDMAiE — When set, there is an interrupt when a frame has been received and DMA is complete. With this interrupt, the RxDMAFrame bit (Register C, BufEvent, Bit 7) is set.

Rdy4TxiE — When set, there is an interrupt when the CS8900A is ready to accept a frame from the host for transmission. (See Section 5.7 on page 99 for a description of the transmit bid process.)

TxUnderruniE — When set, there is an interrupt if the CS8900A runs out of data before it reaches the end of the frame (called a transmit underrun). When this happens, event bit TXUnderrun (Register C, BufEvent, Bit 9) is set and the CS8900A makes no further attempts to transmit that frame. If the host still wants to transmit that particular frame, the host must go through the transmit request process again.

RxMissiE — When set, there is an interrupt if one or more received frames is lost due to slow movement of receive data out of the receive buffer (called a receive miss). When this happens, the RxMiss bit (Register C, BufEvent, Bit A) is set.

Rx128iE — When set, there is an interrupt after the first 128 bytes of a frame have been received. This allows a host processor to examine the Destination Address, Source Address, Length, Sequence Number, and other information before the entire frame is received. This interrupt should not be used with DMA. Thus, if either AutoRxDMA (Register 3, RxCFG, Bit A) or RxDMAonly (Register 3, RxCFG, Bit 9) is set, the Rx128iE bit must be clear.

TxColOvfiE — If set, there is an interrupt when the TxCOL counter increments from 1FFh to 200h. (The TxCOL counter (Register 18) is incremented whenever the CS8900A sees that the RXD+/RXD- pins (10BASE-T) or the CI+/CI- pins (AUI) go active while a packet is being transmitted.)

MissOvfloiE — If MissOvfloiE is set, there is an interrupt when the RxMISS counter increments from 1FFh to 200h. (A receive miss is said to have occurred if packets are lost due to slow movement of receive data out of the receive buffers. When this happens, the RxMiss bit (Register C, BufEvent, Bit A) is set, and the RxMISS counter (Register 10) is incremented.)

RxDestiE — When set, there is an interrupt when a receive frame passes the Destination Address filter criteria defined in the RxCTL register (Register 5). This bit provides an early indication of an incoming frame. It is earlier than Rx128 (Register C, BufEvent, Bit B). If RxDestiE is set, the BufEvent could be RxDest or Rx128. After 128 bytes are received, the BufEvent changes from RxDest to Rx128.

After reset, if no EEPROM is found by the CS8900A, then the register has the following initial state after reset. If an EEPROM is found, then the register's initial value may be set by the EEPROM. See Section 3.3 on page 19.

Reset value is: 0000 0000 0000 1011

4.4.13 Register C: Buffer Event

(BufEvent, Read-only, Address: PacketPage base + 012Ch)

7	6	5	4	3	2	1	0
RxDMA frame	SWint	001100					

F	E	D	C	B	A	9	8
RxDest				Rx128	RxMiss	TxUnder run	Rdy4Tx

BufEvent gives the status of the transmit and receive buffers.

001100 — These bits provide an internal address used by the CS8900A to identify this as the Buffer Event Register. When reading this register, these bits will be 001100, where the LSB corresponds to Bit 0.

SWint — If set, there has been a software initiated interrupt. This bit is used in conjunction with the SWint-X bit (Register B, BufCFG, Bit 6).

RxDMAFrame — If set, one or more received frames have been transferred by slave DMA. If RxDMAiE (Register B, BufCFG, Bit 7) is set, there is an interrupt.

Rdy4Tx — If set, the CS8900A is ready to accept a frame from the host for transmission. If Rdy4TxiE (Register B, BufCFG, Bit 8) is set, there is an interrupt. (See Section 5.7 on page 99 for a description of the transmit bid process.)

TxUnderrun — This bit is set if CS8900A runs out of data before it reaches the end of the frame (called a transmit underrun). If TxUnderruniE (Register B, BufCFG, Bit 9) is set, there is an interrupt.

RxMiss — If set, one or more receive frames have been lost due to slow movement of data out of the receive buffers. If RxMissiE (Register B, BufCFG, Bit A) is set, there is an interrupt.

Rx128 — This bit is set after the first 128 bytes of an incoming frame have been received. This bit will allow the host the option of preprocessing frame data before the entire frame is received. If Rx128iE (Register B, BufCFG, Bit B) is set, there is an interrupt.

RxDest — When set, this bit shows that a receive frame has passed the Destination Address Filter criteria as defined in the RxCTL register (Register 5). This bit is useful as an early indication of an incoming frame. It will be earlier than Rx128 (Register C, BufEvent, Bit B). If RxDestiE (Register B, BufCFG, Bit F) is set, there is an interrupt.

Reset value is: 0000 0000 0000 1100

Notes: With any event register, like BufEvent, all bits are cleared upon readout. The host is responsible for processing all event bits.

4.4.14 Register 10: Receiver Miss Counter

(RxMISS, Read-only, Address: PacketPage base + 0130h)

7	6	5	4	3	2	1	0
MissCount		010000					

F	E	D	C	B	A	9	8
MissCount							

The RxMISS counter (Bits 6 through F) records the number of receive frames that are lost (missed) due to the lack of available buffer space. If the MissOvfloiE bit (Register B, BufCFG, Bit D) is set, there is an interrupt when RxMISS increments from 1FFh to 200h. This interrupt provides the host with an early warning that the RxMISS counter should be read before it reaches 3FFh and starts over (by interrupting at 200h, the host has an additional 512 counts before RxMISS actually overflows). The RxMISS counter is cleared when read.

010000 — These bits provide an internal address used by the CS8900A to identify this as the Receiver Miss Counter. When reading this register, these bits will be 010000, where the LSB corresponds to Bit 0.

MissCount — The upper ten bits contain the number of missed frames.

Register's value is: 0000 0000 0001 0000

4.4.15 Register 10: Transmit Collision Counter

(TxCOL, Read-only, Address: PacketPage base + 0132h)

7	6	5	4	3	2	1	0
ColCount		010010					

F	E	D	C	B	A	9	8
ColCount							

The TxCOL counter (Bits 6 through F) is incremented whenever the 10BASE-T Receive Pair (RXD+ / RXD-) or AUI Collision Pair (CI+ / CI-) becomes active while a packet is being transmitted. If the TxColOvfiE bit (Register B, BufCFG, Bit C) is set, there is an interrupt when TxCOL increments from 1FFh to 200h. This interrupt provides the host with an early warning that the TxCOL counter should be read before it reaches 3FFh and starts over (by interrupting at 200h, the host has an additional 512 counts before TxCOL actually overflows). The TxCOL counter is cleared when read.

010010 — These bits provide an internal address used by the CS8900A to identify this as the Transmit Collision Counter. When reading this register, these bits will be 010010, where the LSB corresponds to Bit 0.

ColCount — The upper ten bits contain the number of collisions.

Reset value is: 0000 0000 0001 0010

4.4.16 Register 13: Line Control

(LineCTL, Read/Write, Address: PacketPage base + 0112h)

7	6	5	4	3	2	1	0
SerTxOn	SerRxON	010011					

F	E	D	C	B	A	9	8
	LoRx Squelch	2-part DefDis	PolarityDis	Mod BackoffE		Auto AUI/10BT	AUIonly

LineCTL determines the configuration of the MAC engine and physical interface.

010011 — These bits provide an internal address used by the CS8900A to identify this as the Line Control Register.

SerRxON — When set, the receiver is enabled. When clear, no incoming packets pass through the receiver. If SerRxON is cleared while a packet is being received, reception is completed and no subsequent receive packets are allowed until SerRxON is set again.

SerTxON — When set, the transmitter is enabled. When clear, no transmissions are allowed. If SerTxON is cleared while a packet is being transmitted, transmission is completed and no subsequent packets are transmitted until SerTxON is set again.

AUIonly — Bits 8 and 9 are used to select either the AUI or the 10BASE-T interface according to the following: [Note: 10BASE-T transmitter will be inactive even when selected unless link pulses are detected or bit DisableLT (register 19) is set.

AUIonly (Bit 8)	AutoAUI/10BT (Bit 9)	Physical Interface
1	N/A	AUI
0>	0	10BASE-T
0	1	Auto-Select

AutoAUI/10BT — See AUIonly (Bit 8) description above.

ModBackoffE — When clear, the ISO/IEC standard backoff algorithm is used (see Section 3.9 on page 28). When set, the Modified Backoff algorithm is used. (The Modified Backoff algorithm extends the backoff delay after each of the first three Tx collisions.)

PolarityDis — The 10BASE-T receiver automatically determines the polarity of the received signal at the RXD+/RXD- input (see Section 3.11 on page 35). When this bit is clear, the polarity is corrected, if necessary. When set, no effort is made to correct the polarity. This bit is independent of the PolarityOK bit (Register 14, LineST, Bit C), which reports whether the polarity is normal or reversed.

2-partDefDis — Before a transmission can begin, the CS8900A follows a deferral procedure. With the 2-partDefDis bit clear, the CS8900A uses the standard two-part deferral as defined in ISO/IEC 8802-3 paragraph 4.2.3.2.1. With the 2-partDefDis bit set, the two-part deferral is disabled.

LoRxSquelch — When clear, the 10BASE-T receiver squelch thresholds are set to levels defined by the ISO/IEC 8802-3 specification. When set, the thresholds are reduced by approximately 6dB. This is useful for operating with "quiet" cables that are longer than 100 meters.

After reset, if no EEPROM is found by the CS8900A, then the register has the following initial state. If an EEPROM is found, then the register's initial value may be set by the EEPROM. See Section 3.3 on page 19.

Reset value is: 0000 0000 0001 0011

4.4.17 Register 14: Line Status

(LineST, Read-only, Address: PacketPage base + 0134h)

7	6	5	4	3	2	1	0
LinkOK		010100					

F	E	D	C	B	A	9	8
	CRS		PolarityOK			10BT	AUI

LineST reports the status of the Ethernet physical interface.

010100 — These bits provide an internal address used by the CS8900A to identify this as the Line Status Register. When reading this register, these bits will be 010100, where the LSB corresponds to Bit 0.

LinkOK — If set, the 10BASE-T link has not failed. When clear, the link has failed, either because the CS8900A has just come out of reset, or because the receiver has not detected any activity (link pulses or received packets) for at least 50 ms.

AUI — If set, the CS8900A is using the AUI.

10BT — If set, the CS8900A is using the 10BASE-T interface.

PolarityOK — If set, the polarity of the 10BASE-T receive signal (at the RXD+ / RXD- inputs) is correct. If clear, the polarity is reversed. If PolarityDis (Register 13, LineCTL, Bit C) is clear, the polarity is automatically corrected, if needed. The PolarityOK status bit shows the true state of the incoming polarity independent of the PolarityDis control bit. Thus, if PolarityDis is clear and PolarityOK is clear, then the receive polarity is inverted, and corrected.

CRS — This bit tells the host the status of an incoming frame. If CRS is set, a frame is currently being received. CRS remains asserted until the end of frame (EOF). At EOF, CRS goes inactive in about 1.3 to 2.3 bit times after the last low-to-high transition of the recovered data.

Reset value is: 0000 0000 0001 0100

4.4.18 Register 15: Self Control

(SelfCTL, Read/Write, Address: PacketPage base + 0114h)

7	6	5	4	3	2	1	0
	RESET	010101					

F	E	D	C	B	A	9	8
HCB1	HCB0	HC1E	HC0E		HW Standby	HWSleepE	SW Suspend

SelfCTL controls the operation of the LED outputs and the lower-power modes.

010101 — These bits provide an internal address used by the CS8900A to identify this as the Chip Self Control Register.

RESET — When set, a chip-wide reset is initiated immediately. RESET is an Act-Once bit. This bit is cleared as a result of the reset.

SWSuspend — When set, the CS8900A enters the software initiated Suspend mode. Upon entering this mode, there is a partial reset. All registers and circuits are reset except for the ISA I/O Base Address Register and the SelfCTL Register. There is no transmit nor receive activity in this mode. To come out of software Suspend, the host issues an I/O Write within the CS8900A's assigned I/O space (see Section 3.7 on page 26 for a complete description of the CS8900A's low-power modes).

HWSleepE — When set, the $\overline{\text{SLEEP}}$ input pin is enabled. If $\overline{\text{SLEEP}}$ is high, the CS8900A is "awake", or operative (unless in SWSuspend mode, as shown above). If $\overline{\text{SLEEP}}$ is low, the CS8900A enters either the Hardware Standby or Hardware Suspend mode. When clear, the CS8900A ignores the $\overline{\text{SLEEP}}$ input pin (see Section 3.7 on page 26 for a complete description of the CS8900A's low-power modes).

HWStandbyE — If HWSleepE is set and the $\overline{\text{SLEEP}}$ input pin is low, then when HWStandbyE is set, the CS8900A enters the Hardware Standby mode. When clear, the CS8900A enters the Hardware Suspend mode (see Section 3.7 on page 26 for a complete description of the CS8900A's low-power modes).

HC0E — The $\overline{\text{LINKLED}}$ or $\overline{\text{HC0}}$ output pin is selected with this control bit. When HC0E is clear, the output pin is $\overline{\text{LINKLED}}$. When HC0E is set, the output pin is $\overline{\text{HC0}}$ and the HCB0 bit (Bit E) controls the pin.

HC1E — The $\overline{\text{BSTATUS}}$ or $\overline{\text{HC1}}$ output pin is selected with this control bit. When HC1E is clear, the output pin is $\overline{\text{BSTATUS}}$ and indicates receiver ISA Bus activity. When HC1E is set, the output pin is $\overline{\text{HC1}}$ and the HCB1 bit (Bit F) controls the pin.

HCB0 — When HC0E (Bit C) is set, this bit controls the $\overline{\text{HC0}}$ pin. If HCB0 is set, $\overline{\text{HC0}}$ is low. If HCB0 is clear, $\overline{\text{HC0}}$ is high. HC0 may drive an LED or a logic gate. When HC0E (Bit C) is clear, this control bit is ignored.

HCB1 — When HC1E (Bit D) is set, this bit controls the $\overline{\text{HC1}}$ pin. If HCB1 is set, $\overline{\text{HC1}}$ is low. If HCB1 is clear, $\overline{\text{HC1}}$ is high. $\overline{\text{HC1}}$ may drive an LED or a logic gate. When HC1E (Bit D) is clear, this control bit is ignored.

After reset, if no EEPROM is found by the CS8900A, then the register has the following initial state. If an EEPROM is found, then the register's initial value may be set by the EEPROM. See Section 3.3 on page 19.

Reset value is: 0000 0000 0001 0101

4.4.19 Register 16: Self Status

(SelfST, Read-only, Address: PacketPage base + 0136h)

7	6	5	4	3	2	1	0
INITD	3.3V Active	010110					

F	E	D	C	B	A	9	8
			EEsize	ELPresent	EEPROM OK	EEPROM present	SIBUSY

SelfST reports the status of the EEPROM interface and the initialization process.

010110 — These bits provide an internal address used by the CS8900A to identify this as the Chip Self Status Register. When reading this register, these bits will be 010110, where the LSB corresponds to Bit 0.

3,3VActive — If the CS8900A is operating on a 3.3V supply, this bit is set. If the CS8900A is operating on a 5V supply, this bit is clear.

INITD — If set, the CS8900A initialization, including read-in of the EEPROM, is complete.

SIBUSY — If set, the EECS output pin is high indicating that the EEPROM is currently being read or programmed. The host must not write to PacketPage base + 0040h nor 0042h until SIBUSY is clear.

EEPROMpresent — If the EEDataIn pin is low after reset, there is no EEPROM present, and the EEPROMpresent bit is clear. If the EEDataIn pin is high after reset, the CS8900A "assumes" that an EEPROM is present, and this bit is set.

EEPROMOK — If set, the checksum of the EEPROM readout was OK.

ELpresent — If set, external logic for Latchable Address bus decode is present.

EEsize — This bit shows the size of the attached EEPROM and is valid only if the EEPROMpresent bit (Bit 9) and EEPROMOK bit (Bit A) are both set. If clear, the EEPROM size is either 128 words (’C56 or ’CS56) or 256 words (C66 or ’CS66). If set, the EEPROM size is 64 words (’C46 or ’CS46).

Reset value is: 0000 0000 0001 0110

4.4.20 Register 17: Bus Control

(BusCTL, Read/Write, Address: PacketPage base + 0116h)

7	6	5	4	3	2	1	0
	Reset RxDMA	010111					

F	E	D	C	B	A	9	8
EnableIRQ		RxDMA size	IOCH RDYE	DMABurst	MemoryE	UseSA	DMAextend

BusCTL controls the operation of the ISA-bus interface.

010111 — These bits provide an internal address used by the CS8900A to identify this as the Bus Control Register.

ResetRxDMA — When set, the RxDMA offset pointer at PacketPage base + 0026h is reset to zero. When the host sets this bit, the CS8900A does the following:

1. Terminates the current receive DMA activity, if any.
2. Clears all internal receive buffers.
3. Zeroes the RxDMA offset pointer.

DMAextend — When set, DMARQx goes inactive on the falling edge of $\overline{IOR}_N$ instead of the rising edge of $\overline{IOR}_{N-1}$. See Switching Characteristics, DMA Read, t_{DMAR5}. Setting this bit also enables single transfer mode DMA. Normal operation is demand mode DMA in which DMACKx cannot deassert until after DMARQx deasserts, i.e. until a full ethernet frame is transferred. Single transfer mode allows DMACKx to deassert between each DMA read.

UseSA — When set, the $\overline{MEMCS16}$ pin goes low whenever the address on SA bus [12..19] match the CS8900A's assigned Memory base address and the $\overline{CHIPSEL}$ pin is low (internal address decode).
When clear, $\overline{MEMCS16}$ is driven low whenever $\overline{CHIPSEL}$ goes low. (external address decode). see Section 4.9 on page 74.
For $\overline{MEMCS16}$ pin to be enabled, the CS8900A must be in Memory Mode with the MemoryE bit (Register 17, BusCTL, Bit A) set.

MemoryE — When set, the CS8900A may operate in Memory Mode. When clear, Memory Mode is disabled. I/O Mode is always enabled.

DMABurst — When clear, the CS8900A performs continuous DMA until the receive frame is completely transferred from the CS8900A to host memory. When set, each DMA access is limited to 28us, after which time the CS8900A gives up the bus for 1.3us before making a new DMA request.

IOCHRDYE — When set, the CS8900A does not use the IOCHRDY output pin, and the pin is always high-impedance. This allows external pull-up to force the output high. When clear, the CS8900A drives IOCHRDY low to request additional time during I/O Read and Memory Read cycles. IOCHRDY does not affect I/O Write, Memory Write, nor DMA Read.

RxDMAsize — This bit determines the size of the receive DMA buffer (located in host memory). When set, the DMA buffer size is 64 Kbytes. When clear, it is 16 Kbytes.

EnableRQ — When set, the CS8900A will generate an interrupt in response to an interrupt event (Section 5.1). When cleared, the CS8900A will not generate any interrupts.

After reset, if no EEPROM is found by the CS8900A, then the register has the following initial state. If an EEPROM is found, then the register's initial value may be set by the EEPROM. See Section 3.3 on page 19.

Reset value is: 0000 0000 0001 0111

4.4.21 Register 18: Bus Status

(BusST, Read-only, Address: PacketPage base + 0138h)

7	6	5	4	3	2	1	0
TxBidErr		011000					

F	E	D	C	B	A	9	8
							Rdy4Tx NOW

BusST describes the status of the current transmit operation.

011000 — These bits provide an internal address used by the CS8900A to identify this as the Bus Status Register. When reading this register, these bits will be 011000, where the LSB corresponds to Bit 0.

TxBidErr — If set, the host has commanded the CS8900A to transmit a frame that the CS8900A will not send. Frames that the CS8900A will not send are:

1) Any frame greater than 1514 bytes, provided that InhibitCRC (Register 9, TxCMD, Bit C) is clear.
2) Any frame greater than 1518 bytes.

Note that this bit is not set when transmit frames are too short.

Rdy4TxNOW — Rdy4TxNOW signals the host that the CS8900A is ready to accept a frame from the host for transmission. This bit is similar to Rdy4Tx (Register C, BufEvent, Bit 8) except that there is no interrupt associated with Rdy4TxNOW. The host can poll the CS8900A and check Rdy4TxNOW to determine if the CS8900A is ready for transmit. (See Section 5.7 on page 99 for a description of the transmit bid process.)

Reset value is: 0000 0000 0001 1000

4.4.22 Register 19: Test Control

(TestCTL, Read/Write, Address: PacketPage base + 0118h)

7	6	5	4	3	2	1	0
DisableLT		011001					

F	E	D	C	B	A	9	8
	FDX			Disable Back-off	AUIloop	ENDEC loop	

TestCTL controls the diagnostic test modes of the CS8900A.

011001 — These bits provide an internal address used by the CS8900A to identify this as the Test Control Register.

DisableLT — When set, the 10BASE-T interface allows packet transmission and reception regardless of the link status. DisableLT is used in conjunction with the LinkOK (Register 14, LineST, Bit 7) as follows:

LinkOK	DisableLT	
0	0	No packet transmission for reception allowed. Transmitter sends link impulses.
0	1	DisableLT overrides LinkOK to allow packet transmission and reception. Transmitter does not send link pulses.
1	N/A	Disable has no meaning if LinkOK = 1.

ENDECloop — When set, the CS8900A enters internal loopback mode where the internal Manchester encoder output is connected to the decoder input. The 10BASE-T and AUI transmitters and receivers are disabled. When clear, the CS8900A is configured for normal operation.

AUIloop — When set, the CS8900A allows reception while transmitting. This facilitates loopback tests for the AUI. When clear, the CS8900A is configured for normal AUI operation.

Disable Backoff — When set, the backoff algorithm is disabled. The CS8900A transmitter looks only for completion of the inter packet gap before starting transmission. When clear, the backoff algorithm is used.

FDX — When set, 10BASE-T full duplex mode is enabled and CRS (Register 14, LineST, Bit E) is ignored. This bit must be set when performing loopback tests on the 10BASE-T port. When clear, the CS8900A is configured for standard half-duplex 10BASE-T operation.

At reset, if no EEPROM is found by the CS8900A, then the register has the following initial state. If an EEPROM is found, then the register's initial value may be set by the EEPROM. See Section 3.3 on page 19.

Reset value is: 0000 0000 0001 1001

4.4.23 Register 1C: AUI Time Domain Reflectometer

(Read-only, Address: PacketPage base + 013Ch)

7	6	5	4	3	2	1	0
AUI Delay		011100					

F	E	D	C	B	A	9	8
AUI Delay							

The TDR counter (Bits 6 through F) is a time domain reflectometer useful in locating cable faults in 10BASE-2 and 10BASE-5 coax networks. It counts at a 10 MHz rate from the beginning of transmission on the AUI to when a collision or Loss-of-Carrier error occurs. The TDR counter is cleared when read.

011100 — These bits provide an internal address used by the CS8900A to identify this as the Bus Status Register. When reading this register, these bits will be 011100, where the LSB corresponds to Bit 0.

AUI-Delay — The upper ten bits contains the number of 10 MHz clock periods between the beginning of transmission on the AUI to when a collision or Loss-of-Carrier error occurs.

Reset value is: 0000 0000 0001 1100

4.5 Initiate Transmit Registers

4.5.1 Transmit Command Request - TxCMD

(Write-only, Address: PacketPage base + 0144h)

7	6	5	4	3	2	1	0
TxStart		001001					
F	**E**	**D**	**C**	**B**	**A**	**9**	**8**
		TxPadDis	InhibitCRC			Onecoll	Force

The word written to PacketPage base + 0144h tells the CS8900A how the next packet should be transmitted. This PacketPage location is write-only, and the written word can be read from Register 9, at PacketPage base + 0108h. The CS8900A does not transmit a frame if TxLength (at PacketPage location base + 0146h) is less than 3. See Section 5.7 on page 99.

001001 — These bits provide an internal address used by the CS8900A to identify this as the Transmit Command Register. When reading this register, these bits will be 001001, where the LSB corresponds to Bit 0.

TxStart — This pair of bits determines how many bytes are transferred to the CS8900A before the MAC starts the packet transmit process.

Bit 7	Bit 6	
0	0	Start transmission after 5 bytes are in the CS8900A
0	1	Start transmission after 381 bytes are in the CS8900A
1	0	Start transmission after 1021 bytes are in the CS8900A
1	1	Start transmission after the entire frame is in the CS8900A

Force — When set in conjunction with a new transmit command, any transmit frames waiting in the transmit buffer are deleted. If a previous packet has started transmission, that packet is terminated within 64 bit times with a bad CRC.

Onecoll — When this bit is set, any transmission will be terminated after only one collision. When clear, the CS8900A allows up to 16 normal collisions before terminating the transmission.

InhibitCRC — When set, the CRC is not appended to the transmission.

TxPadDis — When TxPadDis is clear, if the host gives a transmit length less than 60 bytes and InhibitCRC is set, then the CS8900A pads to 60 bytes. If the host gives a transmit length less than 60 bytes and InhibitCRC is clear, then the CS8900A pads to 60 bytes and appends the CRC.

When TxPadDis is set, the CS8900A allows the transmission of runt frames (a frame less than 64 bytes). If InhibitCRC is clear, the CS8900A appends the CRC. If InhibitCRC is set, the CS8900A does not append the CRC.

Since this register is write-only, it's initial state after reset is undefined.

4.5.2 Transmit Length

(Write-only, Address: PacketPage base + 0146h)

Address 0147h	Address 0146h
Most-significant byte of Transmit Frame Length	Least-significant byte of Transmit Frame Length

This register is used in conjunction with register 9, TxCMD. When a transmission is initiated via a command in TxCMD, the the length of the transmitted frame is written into this register. The length of the transmitted frame may be modified by the configuration of the TxPadDis and InhibitCRC bits in the TxCMD register. See Table 35, and Section 5.7 on page 99. TxLength must be >3 and < 1519.

Since this register is write-only, it's initial state after reset is undefined.

4.6 Address Filter Registers

4.6.1 Logical Address Filter (hash table)

(Read/Write, Address: PacketPage base + 0150h)

Address 0157h	Address 0156h	Address 0155h	Address 0154h	Address 0153h	Address 0152h	Address 0151h	Address 0150h
Most-significant byte of hash filter.							Least-significant byte of hash filter.

The CS8900A hashing decoder circuitry compares its output with one bit of the Logical Address Filter Register. If the decoder output and the Logical Address Filter bit match, the frame passes the hash filter and the Hashed bit (Register 4, RxEvent, Bit 9) is set. See Section 5.3 on page 87.

Reset value is: 0000 0000 0000 0000 0000 0000 0000 0000 0000 0000 0000 0000 0000 0000 0000 0000

4.6.2 Individual Address (IEEE address)

(Read/Write, Address: PacketPage base + 0158h)

Address 0015Dh	Address 0015Ch	Address 0015Bh	Address 0015Ah	Address 0159h	Address 00158h
Octet 5 of IA					Octet 0 of IA

The unique, IEEE 48-bit Individual Address (IA) begins at 0158h. The first bit of the IA (Bit IA[00]) must be "0". See Section 5.3 on page 87.

The value of this register must be loaded from external storage, for example, from the EEPROM. See Section 3.3 on page 19. If the CS8900A is not able to load the IA from the EEPROM, then after a reset this register is undefined, and the driver must write an address to this register.

4.7 Receive and Transmit Frame Locations

The Receive and Transmit Frame PacketPage locations are used to transfer Ethernet frames to and from the host. The host sequentially writes to and reads from these locations, and internal buffer memory is dynamically allocated between transmit and receive as needed. One receive frame and one transmit frame are accessible at a time.

4.7.1 Receive PacketPage Locations

In IO mode, the receive status/length/frame locations are read through repetitive reads from one IO port at the IO base address. See Section 4.10 on page 76.

In memory mode, the receive status/length/frame locations are read using memory reads of a block of memory starting at memory base address + 0400h. Typically the memory locations are read sequentially using repetitive Move instructions (REP MOVS). See Section 4.9 on page 74.

Random access is not needed. However, the first 118 bytes of the receive frame can be accessed randomly if word reads, on even word boundaries, are used. Beyond 118 bytes, the memory reads must be sequential. Byte reads, or reads on odd-word boundaries, can be performed only in sequential read mode. See Section 4.8 on page 73.

The RxStatus word reports the status of the current received frame. RxEvent register 4 (PacketPage base + 0124h) has the same contents as the RxStatus register, except RxEvent is cleared when RxEvent is read.

The RxLength (receive length) word is the length, in bytes, of the data to be transferred to the host across the ISA bus. The register describes the length from the start of Destination Address to the end of CRC, assuming that CRC has been selected (via Register 3 RxCFG, bit BufferCRC). If CRC has not been selected, then the length does not include the CRC, and the CRC is not present in the receive buffer.

After the RxLength has been read, the receive frame can be read. When some portion of the frame is read, the entire frame should be read before reading the RxEvent register either directly or through the ISQ register. Reading the RxEvent register signals to the CS8900A that the host is finished with the current frame, and wants to start processing the next frame. In this case, the current frame will no longer be accessible to the host. The current frame will also become inaccessible if a Skip command is issued, or if the entire frame has been read. See Section 5.2 on page 79.

4.7.2 Transmit Locations

The host can write frames into the CS8900A buffer using Memory writes using REP MOVS to the TxFrame location. See Section 5.7 on page 99.

4.8 Eight and Sixteen Bit Transfers

A data transfer to or from the CS8900A can be done in either I/O or Memory space, and can be either 16 bits wide (word transfers) or 8 bits wide (byte transfers). Because the CS8900A's internal architecture is based on a 16-bit data bus, word transfers are the most efficient.

To transfer transmit frames to the CS8900A and receive frames from the CS8900A, the host may mix word and byte transfers, provided it follows three rules:

1) The primary method used to access CS8900A memory is word access.
2) Word accesses to the CS8900A's internal memory are kept on even-byte boundaries.
3) When switching from byte accesses to word accesses, a byte access to an even byte address must be followed by a byte access to an odd-byte address before the host may execute a word access (this will realign the word transfers to even-byte boundaries). On the other hand, a byte access to an odd-byte address may be followed by a word access.

Failure to observe these three rules may cause data corruption.

4.8.1 Transferring Odd-Byte-Aligned Data

Some applications gather transmit data from more than one section of host memory. The boundary between the various memory locations may be either even- or odd-byte aligned. When such a boundary is odd-byte aligned, the host should transfer the last byte of the first block to an even address, followed by the first byte of the second block to the following odd address. It can then resume word transfers. An example of this is shown in Figure 17.

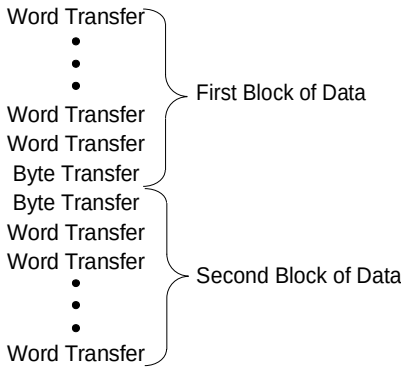

Figure 17. Odd-Byte Aligned Data

4.8.2 Random Access to CS8900A Memory

The first 118 bytes of a receive frame held in the CS8900A's on-chip memory may be randomly accessed in Memory mode. After the first 118 bytes, only sequential access of received data is allowed. Either byte or word access is permitted, as long as all word accesses are executed to even-byte boundaries.

4.9 Memory Mode Operation

To configure the CS8900A for Memory Mode, the PacketPage memory must be mapped into a contiguous 4-kbyte block of host memory. The block must start at an X000h boundary, with the PacketPage base address mapped to X000h. When the CS8900A comes out of reset, its default configuration is I/O Mode. Once Memory Mode is selected, all of the CS8900A's registers can be accessed directly.

In Memory Mode, the CS8900A supports Standard or Ready Bus cycles without introducing additional wait states.

Memory moves can use MOVD (double-word transfers) as long as the CS8900A's memory base address is on a double word boundary. Since 286 processors don't support the MOVD instruction, word and byte transfers must be used with a 286.

Description	Mnemonic	Read/Write	Location: PocketPage base +
Receive Status	RxStatus	Read-only	0400h-0401h
Receive Length	RxLength	Read-only	0402h-0403h
Receive Frame	RxFrame	Read-only	starts at 0404h
Transmit Frame	TxFrame	Write-only	starts at 0A00h

Table 16. Receive/Transmit Memory Locations

4.9.1 Accesses in Memory Mode

The CS8900A allows Read/Write access to the internal PacketPage memory, and Read access of the optional Boot PROM. (See Section 3.7 on page 26 for a description of the optional Boot PROM.)

A memory access occurs when all of the following are true:

- The address on the ISA System Address bus (SA0 - SA19) is within the Memory space range of the CS8900A or Boot PROM.
- The $\overline{\text{CHIPSEL}}$ input pin is low.
- Either the $\overline{\text{MEMR}}$ pin or the $\overline{\text{MEMW}}$ pin is low.

4.9.2 Configuring the CS8900A for Memory Mode

There are two different methods of configuring the CS8900A for Memory Mode operation. One method allows the CS8900A's internal memory to be mapped anywhere within the host system's 24-bit

memory space. The other method limits memory mapping to the first 1 Mbyte of host memory space.

General Memory Mode Operation: Configuring the CS8900A so that its internal memory can be mapped anywhere within host Memory space requires the following:

- a simple circuit must be added to decode the Latchable Address bus (LA20 - LA23) and the BALE signal.
- the host must configure the external logic with the correct address range as follows:
    1) Check to see if the INITD bit (Register 16, SelfST, bit 7) is set, indicating that initialization is complete.
    2) Check to see if the ELpresent bit (Register 16, SelfST, bit B) is set. This bit indicates that external logic for the LA bus decode is present.
    3) Set the ELSEL bit of the EEPROM Command Register to activate the $\overline{\text{ELCS}}$ pin for use with the external decode circuit.
    4) Configure the external logic serially.
- the host must write the memory base address into the Memory Base Address register (PacketPage base + 002Ch);
- the host must set the MemoryE bit (Register 17, BusCTL, Bit A); and
- the host must set the UseSA bit (Register 17, BusCTL, Bit 9).

Limiting Memory Mode to the First 1 Mbyte of Host Memory Space: Configuring the CS8900A so that its internal memory can be mapped only within the first 1 Mbyte of host memory space requires the following:

- the $\overline{\text{CHIPSEL}}$ pin must be tied low;
- the ISA-bus SMEMR signal must be connected to the $\overline{\text{MEMR}}$ pin;
- the ISA-bus $\overline{\text{SMEMW}}$ signal must be connected to the $\overline{\text{MEMW}}$ pin;
- the host must write the memory base address into the Memory Base Address register (PacketPage base + 002Ch);
- the host must set the MemoryE bit (Register 17, BusCTL, Bit A); and
- the host must clear the UseSA bit (Register 17, BusCTL, Bit 9).

4.9.3 Basic Memory Mode Transmit

Memory Mode transmit operations occur in the following order (using interrupts):

1) The host bids for storage of the frame by writing the Transmit Command to the TxCMD register (memory base + 0144h) and the transmit frame length to the TxLength register (memory base + 0146h). If the transmit length is erroneous, the command is discarded and the TxBidErr bit (Register 18, BusST, Bit 7) is set.
2) The host reads the BusST register (Register 18, memory base + 0138h). If the Rdy4TxNOW bit (Bit 8) is set, the frame can be written. If clear, the host must wait for CS8900A buffer memory to become available. If Rdy4TxiE (Register B, BufCFG, Bit 8) is set, the host will be interrupted when Rdy4Tx (Register C, BufEvent, Bit 8) becomes set.
3) Once the CS8900A is ready to accept the frame, the host executes repetitive memory-to-memory move instructions (REP MOVS) to memory base + 0A00h to transfer the entire frame from host memory to CS8900A memory.

For a more detailed description of transmit, see Section 5.7 on page 99.

4.9.4 Basic Memory Mode Receive

Memory Mode receive operations occur in the following order (interrupts used to signal the presence of a valid receive frame):

1) A frame is received by the CS8900A, triggering an enabled interrupt.
2) The host reads the Interrupt Status Queue (memory base + 0120h) and is informed of the receive frame.
3) The host reads RxStatus (memory base + 0400h) to learn the status of the receive frame.
4) The host reads RxLength (memory base + 0402h) to learn the frame's length.
5) The host reads the frame data by executing repetitive memory-to-memory move instructions (REP MOVS) from memory base + 0404h to transfer the entire frame from CS8900A memory to host memory.

For a more detailed description of receive, see Section 5.2 on page 79.

4.9.5 Polling the CS8900A in Memory Mode

If interrupts are not used, the host can poll the CS8900A to check if receive frames are present and if memory space is available for transmit. However, this is beyond the scope of this data sheet.

4.10 I/O Space Operation

In I/O Mode, PacketPage memory is accessed through eight 16-bit I/O ports that are mapped into 16 contiguous I/O locations in the host system's I/O space. I/O Mode is the default configuration for the CS8900A and is always enabled. On power up, the default value of the I/O base address is set at 300h. (Note that 300h is typically assigned to LAN peripherals). The I/O base address may be changed to any available XXX0h location, either by loading configuration data from the EEPROM, or during system setup. Table 17 shows the CS8900A I/O Mode mapping.

Offset	Type	Description
0000h	Read/Write	Receive/Transmit Data (Port 0)
0002h	Read/Write	Receive/Transmit Data (Port 1)
0004h	Write-only	TxCMD (Transmit Command)
0006h	Write-only	TxLength (Transmit Length)
0008h	Read-only	Interrupt Status Queue
000Ah	Read/Write	PacketPage Pointer
000Ch	Read/Write	PacketPage Data (Port 0)
000Eh	Read/Write	PacketPage Data (Port 1)

Table 17. I/O Mode Mapping

4.10.1 Receive/Transmit Data Ports 0 and 1

These two ports are used when transferring transmit data to the CS8900A and receive data from the CS8900A. Port 0 is used for 16-bit operations and Ports 0 and 1 are used for 32-bit operations (lower-order word in Port 0).

4.10.2 TxCMD Port

The host writes the Transmit Command (TxCMD) to this port at the start of each transmit operation. The Transmit Command tells the CS8900A that the host has a frame to be transmitted, as well as how that frame should be transmitted. This port is mapped into PacketPage base + 0144h. See Register 9 in Section 4.4 on page 47 for more information.

4.10.3 TxLength Port

The length of the frame to be transmitted is written here immediately after the Transmit Command is written. This port is mapped into PacketPage base + 0146h.

4.10.4 Interrupt Status Queue Port

This port contains the current value of the Interrupt Status Queue (ISQ). The ISQ is located at PacketPage base + 0120h. For a more detailed description of the ISQ, see Section 5.1 on page 79.

4.10.5 PacketPage Pointer Port

The PacketPage Pointer Port is written whenever the host wishes to access any of the CS8900A's internal registers. The first 12 bits (bits 0 through B) provide the internal address of the target register to be accessed during the current operation. The next

three bits (C, D, and E) are read-only and will always read as 011b. Any convenient value may be written to these bits when writing to the PacketPage Pointer Port. The last bit (Bit F) indicates whether or not the PacketPage Pointer should be auto-incremented to the next word location. Figure 18 shows the structure of the PacketPage Pointer.

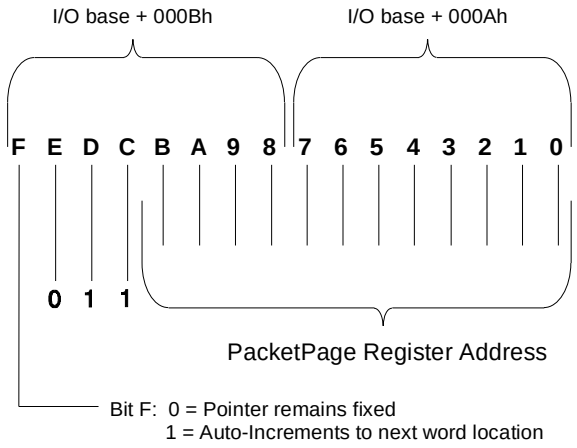

Figure 18. PacketPage Pointer

4.10.6 PacketPage Data Ports 0 and 1

The PacketPage Data Ports are used to transfer data to and from any of the CS8900A's internal registers. Port 0 is used for 16-bit operations and Port 0 and 1 are used for 32-bit operations (lower-order word in Port 0).

4.10.7 I/O Mode Operation

For an I/O Read or Write operation, the AEN pin must be low, and the 16-bit I/O address on the ISA System Address bus (SA0 - SA15) must match the address space of the CS8900A. For a Read, the $\overline{IOR}$ pin must be low, and for a Write, the $\overline{IOW}$ pin must be low.

Note: The ISA Latchable Address Bus (LA17 - LA23) is not needed for applications that use only I/O Mode and Receive DMA operation.

4.10.8 Basic I/O Mode Transmit

I/O Mode transmit operations occur in the following order (using interrupts):

1) The host bids for storage of the frame by writing the Transmit Command to the TxCMD Port (I/O base + 0004h) and the transmit frame length to the TxLength Port (I/O base + 0006h).
2) The host reads the BusST register (Register 18) to see if the Rdy4TxNOW bit (Bit 8) is set. To read the BusST register, the host must first set the PacketPage Pointer at the correct location by writing 0138h to the PacketPage Pointer Port (I/O base + 000Ah). It can then read the BusST register from the PacketPage Data Port (I/O base + 000Ch). If Rdy4TxNOW is set, the frame can be written. If clear, the host must wait for CS8900A buffer memory to become available. If Rdy4TxiE (Register B, BufCFG, Bit 8) is set, the host will be interrupted when Rdy4Tx (Register C, BufEvent, Bit 8) becomes set. If the TxBidErr bit (Register 18, BusST, Bit 7) is set, the transmit length is not valid.
3) Once the CS8900A is ready to accept the frame, the host executes repetitive write instructions (REP OUT) to the Receive/Transmit Data Port (I/O base + 0000h) to transfer the entire frame from host memory to CS8900A memory.

For a more detailed description of transmit, see Section 5.7 on page 99.

4.10.9 Basic I/O Mode Receive

I/O Mode receive operations occur in the following order (In this example, interrupts are enabled to signal the presence of a valid receive frame):

1) A frame is received by the CS8900A, triggering an enabled interrupt.
2) The host reads the Interrupt Status Queue Port (I/O base + 0008h) and is informed of the receive frame.
3) The host reads the frame data by executing repetitive read instructions (REP IN) from the Receive/Transmit Data Port (I/O base + 0000h) to transfer the frame from CS8900A memory to

host memory. Preceding the frame data are the contents of the RxStatus register (PacketPage base + 0400h) and the RxLength register (PacketPage base + 0402h).

For a more detailed description of receive, see Section 5.2 on page 79.

4.10.10 Accessing Internal Registers

To access any of the CS8900A's internal registers in I/O Mode, the host must first setup the PacketPage Pointer. It does this by writing the PacketPage address of the target register to the PacketPage Pointer Port (I/O base + 000Ah). The contents of the target register is then mapped into the PacketPage Data Port (I/O base + 000Ch).

If the host needs to access a sequential block of registers, the MSB of the PacketPage address of the first word to be accessed should be set to "1". The PacketPage Pointer will then move to the next word location automatically, eliminating the need to setup the PacketPage Pointer between successive accesses (see Figure 18).

4.10.11 Polling the CS8900A in I/O Mode

If interrupts are not used, the host can poll the CS8900A to check if receive frames are present and if memory space is available for transmit.

5.0 OPERATION

5.1 Managing Interrupts and Servicing the Interrupt Status Queue

The Interrupt Status Queue (ISQ) is used by the CS8900A to communicate Event reports to the host processor. Whenever an event occurs that triggers an enabled interrupt, the CS8900A sets the appropriate bit(s) in one of five registers, maps the contents of that register to the ISQ, and drives the selected interrupt request pin high (if an earlier interrupt is waiting in the queue, the interrupt request pin will already be high). When the host services the interrupt, it must first read the ISQ to learn the nature of the interrupt. It can then process the interrupt (the first read to the ISQ causes the interrupt request pin to go low.)

Three of the registers mapped to the ISQ are event registers: RxEvent (Register 4), TxEvent (Register 8), and BufEvent (Register C). The other two registers are counter-overflow reports: RxMISS (Register 10) and TxCOL (Register 12). There may be more than one RxEvent report and/or more than one TxEvent report in the ISQ at a time. However, there may be only one BufEvent report, one RxMISS report and one TxCOL report in the ISQ at a time.

Event reports stored in the ISQ are read out in the order of priority, with RxEvent first, followed by TxEvent, BufEvent, RxMiss, and then TxCOL. The host only needs to read from one location to get the interrupt currently at the front of the queue. In Memory Mode, the ISQ is located at PacketPage base + 0120h. In I/O Mode, it is located at I/O base + 0008h. Each time the host reads the ISQ, the bits in the corresponding register are cleared and the next report in the queue moves to the front.

When the host starts reading the ISQ, it must read and process all Event reports in the queue. A readout of a null word (0000h) indicates that all interrupts have been read.

The ISQ is read as a 16-bit word. The lower six bits (0 through 5) contain the register number (4, 8, C, 10, or 12). The upper ten bits (6 through F) contain the register contents. The host must always read the entire 16-bit word.

The active interrupt pin (INTRQx) is selected via the Interrupt Number register (PacketPage base + 22h). As an additional option, all of the interrupt pins can be 3-Stated using the same register. see Section 4.3 on page 42.

An event triggers an interrupt only when the EnableIRQ bit of the Bus Control register (bit F of register 17) is set. After the CS8900A has generated an interrupt, the first read of the ISQ makes the INTRQ output pin go low (inactive). INTRQ remains low until the null word (0000h) is read from the ISQ, or for 1.6us, whichever is longer.

5.2 Basic Receive Operation

5.2.0.1 Overview

Once an incoming packet has passed through the analog front end and Manchester decoder, it goes through the following three-step receive process:

1) Pre-Processing
2) Temporary Buffering
3) Transfer to Host

Figure 20 shows the steps in frame reception.

As shown in the figure, all receive frames go through the same pre-processing and temporary buffering phases, regardless of transfer method

Once a frame has been pre-processed and buffered, it can be accessed by the host in either Memory or I/O space. In addition, the CS8900A can transfer receive frames to host memory via host DMA. This section describes receive frame pre-processing and Memory and I/O space receive operation. Section 5.4 on page 90 through Section 5.5 on page 93 describe DMA operation.

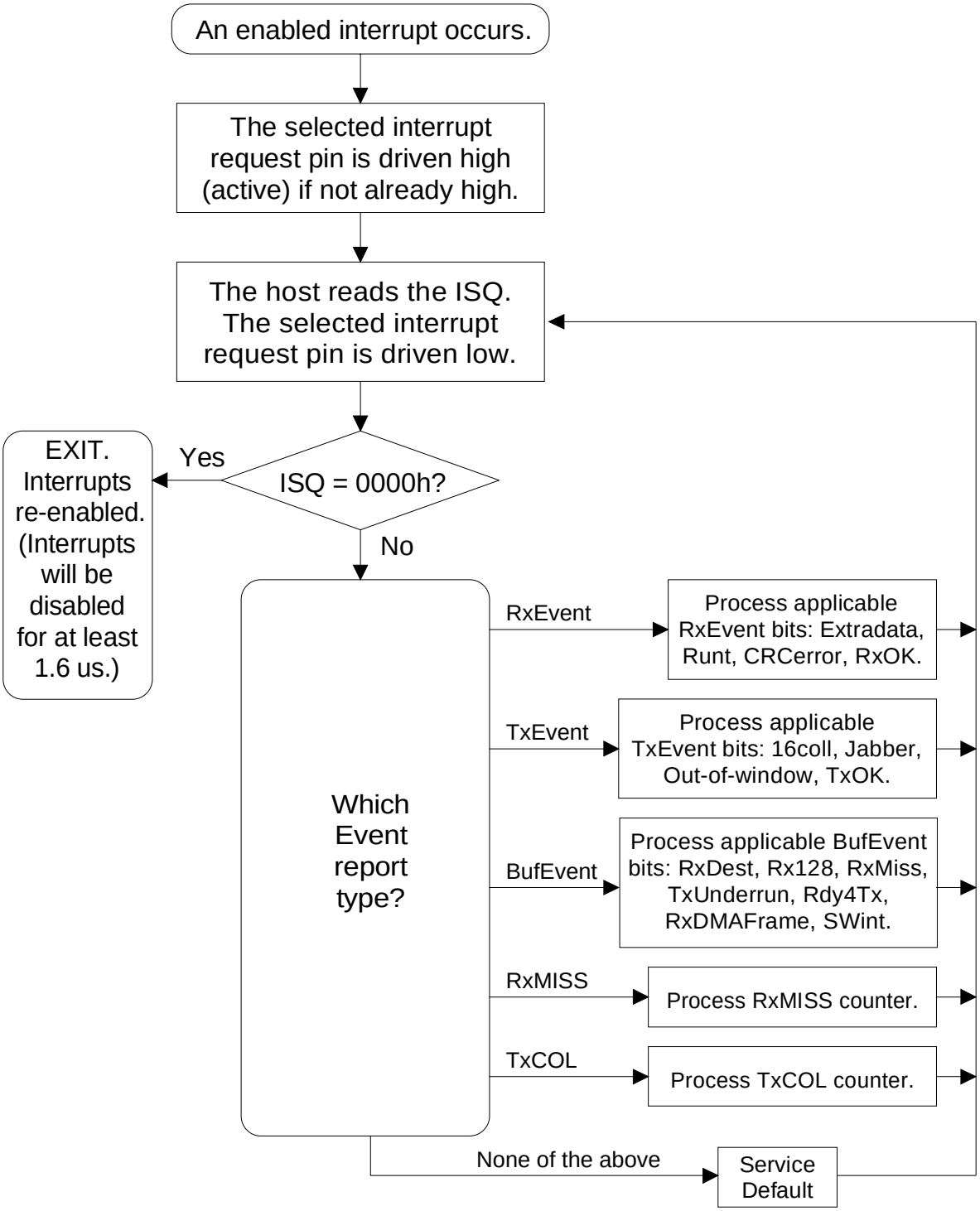

Figure 19. Interrupt Status Queue

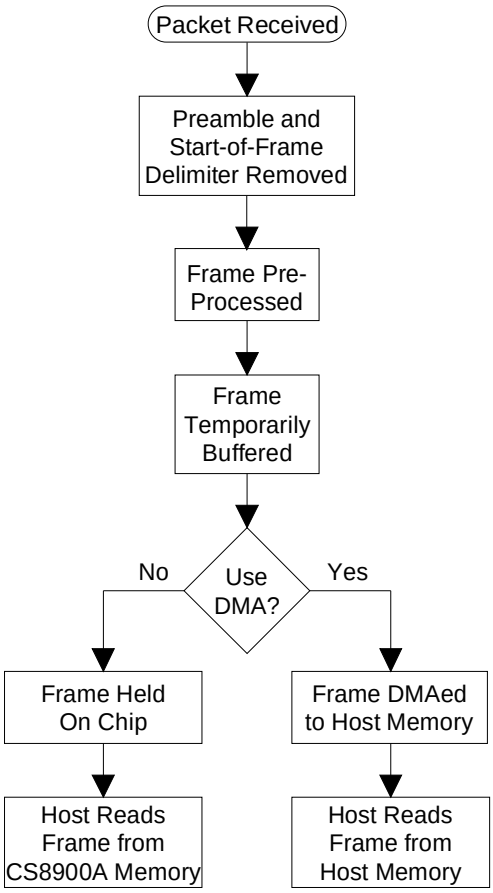

Figure 20. Frame Reception

5.2.1 Terminology: Packet, Frame, and Transfer

The terms Packet, Frame, and Transfer are used extensively in the following sections. They are defined below for clarity:

5.2.1.1 Packet

The term "packet" refers to the entire serial string of bits transmitted over an Ethernet network. This includes the preamble, Start-of-Frame Delimiter (SFD), Destination Address (DA), Source Address (SA), Length field, Data field, pad bits (if necessary), and Frame Check Sequence (FCS, also called CRC). Figure 9 shows the format of a packet.

5.2.1.2 Frame

The term "frame" refers to the portion of a packet from the DA to the FCS. This includes the Destination Address (DA), Source Address (SA), Length field, Data field, pad bits (if necessary), and Frame Check Sequence (FCS, also called CRC). Figure 9 shows the format of a frame. The term "frame data" refers to all the data from the DA to the FCS that is to be transmitted, or that has been received.

5.2.1.3 Transfer

The term "transfer" refers to moving data across the ISA bus, to and from the CS8900A. During receive operations, only frame data are transferred from the CS8900A to the host (the preamble and SFD are stripped off by the CS8900A's MAC engine). The FCS may or may not be transferred, depending on the configuration. All transfers to and from the CS8900A are counted in bytes, but may be padded for double word alignment.

5.2.2 Receive Configuration

After each reset, the CS8900A must be configured for receive operation. This can be done automatically using an attached EEPROM or by writing configuration commands to the CS8900A's internal registers (see Section 3.4 on page 21). The items that must be configured include:

- which physical interface to use;
- which types of frames to accept;
- which receive events cause interrupts; and,
- how received frames are transferred.

5.2.2.1 Configuring the Physical Interface

Configuring the physical interface consists of determining which Ethernet interface should be active, and enabling the receive logic for serial reception. This is done via the LineCTL register (Register 13) and is described in Table18.

5.2.2.2 Choosing which Frame Types to Accept

The RxCTL register (Register 5) is used to determine which frame types will be accepted by the CS8900A (a receive frame is said to be "accepted" when the frame is buffered, either on chip or in host

Register 13, LineCTL		
Bit	**Bit Name**	**Operation**
6	SerRxON	When set, reception enabled.
8	AUIonly	When set, AUI selected (takes precedence over AutoAUI/10BT).
9	AutoAUI/10BT	When set, automatic interface selection enabled. When both bits 8 and 9 are clear, 10BASE-T selected.
E	LoRx Squelch	When set, receiver squelch level reduced by approximately 6 dB.

Table 18. Physical Interface Configuration

memory via DMA). Table 19 describes the configuration bits in this register. Refer to Section 5.3 on page 87 for a detailed description of Destination Address filtering.

Register 5, LRxCTL		
Bit	**Bit Name**	**Operation**
6	IAHashA	When set, Individual Address frames that pass the hash filter are accepted*.
7	Promis cuousA	When set, all frames are accepted*.
8	RxOKA	When set, frames with valid length and CRC and that pass the DA filter are accepted.
9	MulticastA	When set, Multicast frames that pass the hash filter are accepted*.
A	IndividualA	When set, frames with DA that matches the IA at PacketPage base + 0158h are accepted*.
B	Broad-castA	When set, all broadcast frames are accepted*.
C	CRCerrorA	When set, frames with bad CRC that pass the DA filter are accepted.
D	RuntA	When set, frames shorter than 64 bytes that pass the DA filter are accepted.
E	ExtradataA	When set, frames longer than 1518 bytes that pass the DA filter are accepted (only the first 1518 bytes are buffered).

* Must also meet the criteria programmed into bits 8, C, D, and E.

Table 19. Frame Acceptance Criteria

5.2.2.3 Selecting which Events Cause Interrupts

The RxCFG register (Register 3) and the BufCFG register (Register B) are used to determine which receive events will cause interrupts to the host processor. Table 21 describes the interrupt enable (iE) bits in these registers.

Register 3, RxCFG		
Bit	**Bit Name**	**Operation**
8	RxOKiE	When set, there is an interrupt if a frame is received with valid length and CRC*.
C	CRCerroriE	When set, there is an interrupt if a frame is received with bad CRC*.
D	RuntiE	When set, there is an interrupt if a frame is received that is shorter than 64 bytes*.
E	ExtradataiE	When set, there is an interrupt if a frame is received that is longer than 1518 bytes*.

* Must also pass the DA filter before there is an interrupt.

Table 20.

Register B, BufCFG		
Bit	**Bit Name**	**Operation**
7	RxDMAiE	When set, there is an interrupt if one or more frames are transferred via DMA.
A	RxMissiE	When set, there is an interrupt if a frame is missed due to insufficient receive buffer space.
B	Rx128iE	When set, there is an interrupt after the first 128 bytes of receive data have been buffered.
D	MissOvfloiE	When set, there is an interrupt if the RxMISS counter overflows.
F	RxDestiE	When set, there is an interrupt after the DA of an incoming frame has been buffered.

Table 21. Registers 3 and B Interrupt Configuration

5.2.2.4 Choosing How to Transfer Frames

The RxCFG register (Register 3) and the BusCTL register (Register 17) are used to determine how frames will be transferred to host memory, as described in Table 22.

Register 3, RxCFG		
Bit	**Bit Name**	**Operation**
7	StreamE	When set, Stream Transfer enabled.
9	RxDMAonly	When set, DMA slave operation used for all receive frames.
A	AutoRX DMAE	When set, Auto-Switch DMA enabled.
B	BufferCRC	When set, the received CRC is buffered.
Register 17, BusCTL		
Bit	**Bit Name**	**Operation**
B	DMABurst	When set, DMA operations hold the bus for up to approximately 28 µs. When clear, DMA operations are continuous.
D	RxDMAsize	When set, DMA buffer size is 64 Kbytes. When clear, DMA buffer size is 16 Kbytes.

Table 22. Receive Frame Pre-Processing

5.2.3 Receive Frame Pre-Processing

The CS8900A pre-processes all receive frames using a four step process:

1) Destination Address filtering;

2) Early Interrupt Generation;

3) Acceptance filtering; and,

4) Normal Interrupt Generation.

Figure 21 provides a diagram of frame pre-processing.

5.2.3.1 Destination Address Filtering

All incoming frames are passed through the Destination Address filter (DA filter). If the frame's DA passes the DA filter, the frame is passed on for further pre-processing. If it fails the DA filter, the frame is discarded. See Section 5.3 on page 87 for a more detailed description of DA filtering.

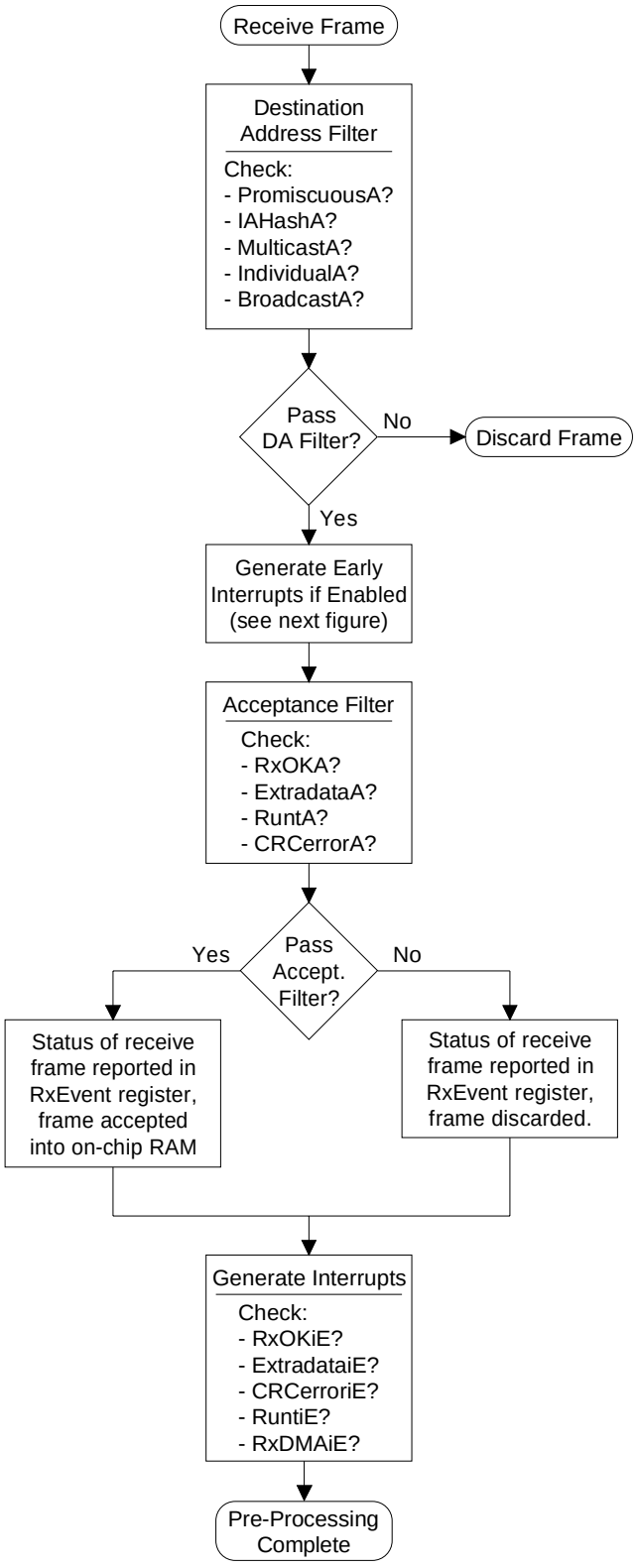

Figure 21. Receive Frame Pre-Processing

5.2.3.2 Early Interrupt Generation

The CS8900A support the following two early interrupts that can be used to inform the host that a frame is being received:

- RxDest: The RxDest bit (Register C, BufEvent, Bit F) is set as soon as the Destination Address (DA) of the incoming frame passes the DA filter. If the RxDestiE bit (Register B, BufCFG, bit F) is set, the CS8900A generates a corresponding interrupt. Once RxDest is set, the host is allowed to read the incoming frame's DA (the first 6 bytes of the frame).
- Rx128: The Rx128 bit (Register C, BufEvent, Bit B) is set as soon as the first 128 bytes of the incoming frame have been received. If the Rx128iE bit (Register B, BufCFG, bit B) is set, the CS8900A generates a corresponding interrupt. Once the Rx128 bit is set, the RxDest bit is cleared and the host is allowed to read the first 128 bytes of the incoming frame. The Rx128 bit is cleared by the host reading the BufEvent register (either directly or through the Interrupt Status Queue) or by the CS8900A detecting the incoming frame's End-of-Frame (EOF) sequence.

Like all Event bits, RxDest and Rx128 are set by the CS8900A whenever the appropriate event occurs. Unlike other Event bits, RxDest and Rx128 may be cleared by the CS8900A without host intervention. All other event bits are cleared only by the host reading the appropriate event register, either directly or through the Interrupt Status Queue (ISQ). (RxDest and Rx128 can also be cleared by the host reading the BufEvent register, either directly or through the Interrupt Status Queue). Figure 22 provides a diagram of the Early Interrupt process.

5.2.3.3 Acceptance Filtering

The third step of pre-processing is to determine whether or not to accept the frame by comparing the frame with the criteria programmed into the RxCTL register (Register 5). If the receive frame passes the Acceptance filter, the frame is buffered, either on chip or in host memory via DMA. If the frame fails the Acceptance filter, it is discarded. The results of the Acceptance filter are reported in the RxEvent register (Register 4).

5.2.3.4 Normal Interrupt Generation

The final step of pre-processing is to generate any enabled interrupts that are triggered by the incoming frame. Interrupt generation occurs when the entire frame has been buffered (up to the first 1518 bytes). For more information about interrupt generation, see Section 5.1 on page 79.

5.2.4 Held vs. DMAed Receive Frames

All accepted frames are either held in on-chip RAM until processed by the host, or stored in host memory via DMA. A receive frame that is held in on-chip RAM is referred to as a held receive frame. A frame that is stored in host memory via DMA is a DMAed receive frame. This section describes buffering and transferring held receive frames. Section 5.4 on page 90 through Section 5.6 on page 96 describe DMAed receive frames.

5.2.5 Buffering Held Receive Frames

If space is available, an incoming frame will be temporarily stored in on-chip RAM, where it awaits processing by the host. Although this receive frame now occupies on-chip memory, the CS8900A does not commit the memory space to it until one of the following two conditions is true:

1) The entire frame has been received and the host has learned about the frame by reading the RxEvent register (Register 4), either directly or through the ISQ.

Or:

2) The frame has been partially received, causing either the RxDest bit (Register C, BufEvent, Bit F) or the Rx128 bit (Register C, BufEvent, Bit B) to become set, and the host has learned about

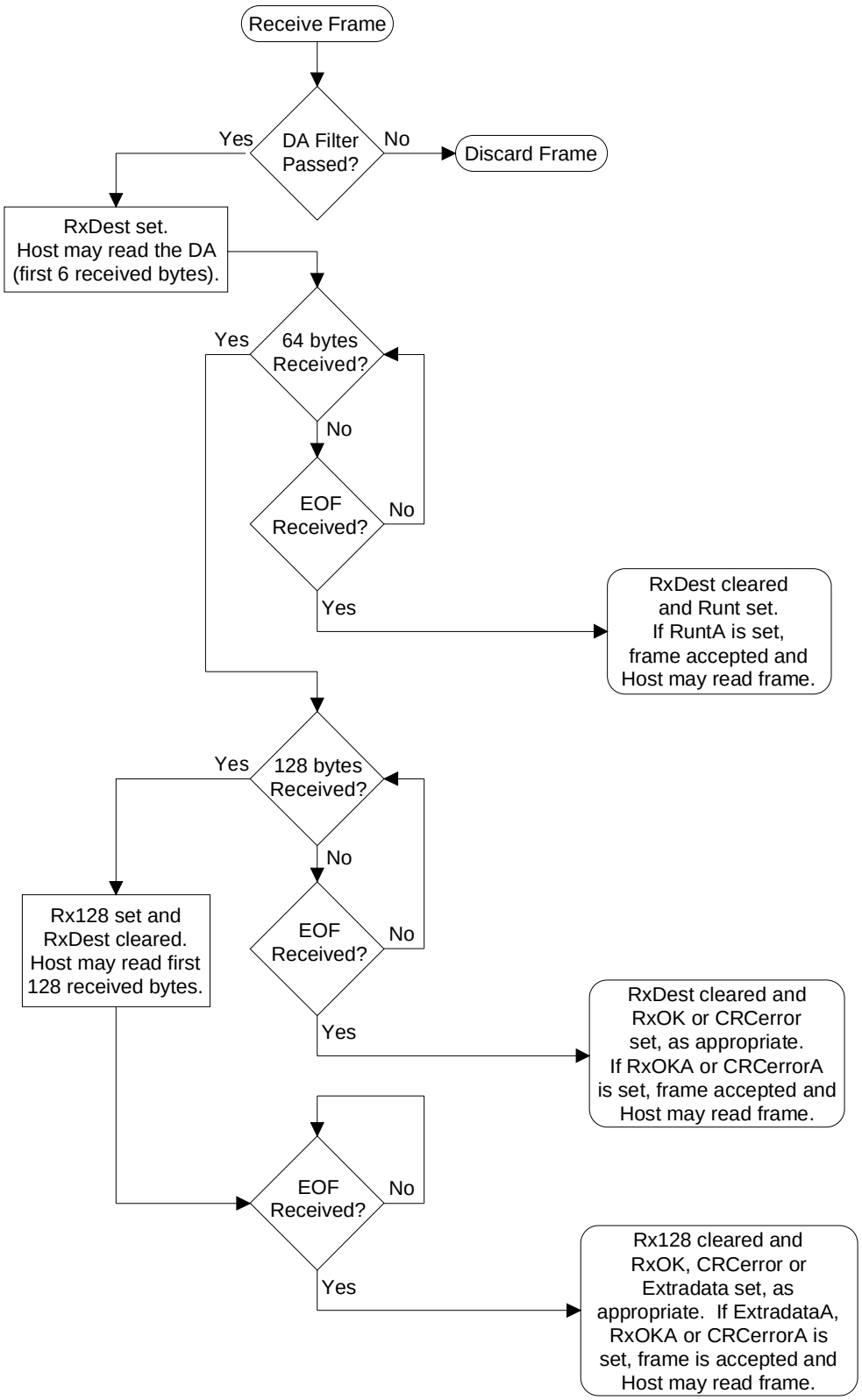

Figure 22. Early Interrupt Generation

the receive frame by reading the BufEvent register (Register C), either directly or through the ISQ.

When the CS8900A commits buffer space to a particular held receive frame (termed a committed received frame), no data from subsequent frames can be written to that buffer space until the frame is freed from commitment. (The committed received frame may or may not have been received error free.)

A received frame is freed from commitment by any one of the following conditions:

1) The host reads the entire frame sequentially in the order that it was received (first byte in, first byte out).

Or:

2) The host reads part or none of the frame, and then issues a Skip command by setting the Skip_1 bit (Register 3, RxCFG, bit 6).

Or:

3) The host reads part of the frame and then reads the RxEvent register (Register 5), either directly or through the ISQ, and learns of another receive frame. This condition is called an "implied Skip". Ensure that the host does not do “implied skips.”

Both early interrupts are disabled whenever there is a committed receive frame waiting to be processed by the host.

5.2.6 Transferring Held Receive Frames

The host can read-out held receive frames in Memory or I/O space. To transfer frames in Memory space, the host executes repetitive Move instructions (REP MOVS) from PacketPage base + 0404h. To transfer frames in I/O space, the host executes repetitive In instructions (REP IN) from I/O base + 0000h, with status and length preceding the frame.

There are three possible ways that the host can learn the status of a particular frame. It can:

1) Read the Interrupt Status Queue;

2) Read the RxEvent register directly (Register4); or

3) Read the RxStatus register (PacketPage base + 0400h).

5.2.7 Receive Frame Visibility

Only one receive frame is visible to the host at a time. The receive frame's status can be read from the RxStatus register (PacketPage base + 0400h), and its length can be read from the RxLength register (PacketPage base + 0402h). For more information about Memory space operation, see Section 4.9 on page 74. For more information about I/O space operation, see Section 4.10 on page 76.

5.2.8 Example of Memory Mode Receive Operation

A common length for short frames is 64 bytes, including the 4-byte CRC. Suppose that such a frame has been received with the CS8900A configured as follows:

- The BufferCRC bit (Register 3, RxCFG, Bit B) is set causing the 4-byte CRC to be buffered with the rest of the receive data.
- The RxOKA bit (Register 5, RxCTL, Bit 8) is set, causing the CS8900A to accept good frames (a good frame is one with legal length and valid CRC).
- The RxOKiE bit (Register 3, RxCFG, Bit 8) is set, causing an interrupt to be generated whenever a good frame is received.

Then the transfer to the host would proceed as follows:

1) The CS8900A generates an RxOK interrupt to the host to signal the arrival of a good frame.

2) The host reads the ISQ (PacketPage base +

0120h) to assess the status of the receive frame and sees the contents of the RxEvent register (Register 4) with the RxOK bit (Bit 8) set.

3) The host reads the receive frame's length from the RxLength register (PacketPage base + 0402h).

4) The host reads the frame data by executing 32 consecutive MOV instructions starting with PacketPage base + 0404h.

The memory map of the 64-byte frame is given in Table 23.

Memory Space Word Offset	Description of Data Stored in On-chip RAM
0400h	RxStatus Register (the host may skip reading 0400h since RxEvent was read from the ISQ.)
0402h	RxLength Register (In this example, the length is 40h bytes. The frame starts at 0404h, and runs through 0443h.)
0404h to 0409h	6-byte Source Address.
040Ah to 040Fh	6-byte Destination Address.
0410h to 011h	2-byte Length or Type Field.
0412h to 043Fh	46 bytes of data.
0440h	CRC, bytes 1 and 2
0442h	CRC, bytes 3 and 4

Table 23. Example Memory Map

5.2.9 Receive Frame Byte Counter

The receive frame byte counter describes the number of bytes received for the current frame. The counter is incremented in real time as bytes are received from the Ethernet. The byte counter can be used by the driver to determine how many bytes are available for reading out of the CS8900A. Maximum Ethernet throughput can be achieved by using I/O or memory modes, and by dedicating the CPU to reading this counter, and using the count to read the frame out of the CS8900A at the same time it is being received by the CS8900A from the Ethernet (parallel frame-reception and frame-read-out tasks).

The byte count register resides at PacketPage base + 50h.

Following an RxDest or Rx128 interrupt the register contains the number of bytes which are available to be read by the CPU. When the end of frame is reached, the count contains the final count value for the frame, including the allowance for the BufferCRC option. When this final count is read by the CPU the count register is set to zero. Therefore to read a complete frame using the byte count register, the register can be read and the data moved until a count of zero is detected. Then the RxEvent register can be read to determine the final frame status.

The sequence is as follows:

1) At the start of a frame, the byte counter matches the incoming character counter. The byte counter will have an even value prior to the end of the frame.

2) At the end of the frame, the final count, including the allowance for the CRC (if the BufferCRC option is enabled), is held until the byte counter is read.

3) When a read of the byte counter returns a count of zero, the previous count was the final count. The count may now have an odd value.

4) RxEvent should be read to obtain a final status of the frame, followed by a Skip command to complete the operation.

Note that all RxEvent's should be processed before using the byte counter. The byte counter should be used following a BufEvent when RxDest or Rx128 interrupts are enabled.

5.3 Receive Frame Address Filtering

The CS8900A is equipped with a Destination Address (DA) filter used to determine which receive frames will be accepted. (A receive frame is said to be "accepted" by the CS8900A when the frame data are placed in either on-chip memory, or in host

memory by DMA). The DA filter can be configured to accept the following frame types:

5.3.0.1 Individual Address Frames

For all Individual Address frames, the first bit of the DA is a "0" (DA[0] = 0), indicating that the address is a Physical Address. The address filter accepts Individual Address frames whose DA matches the Individual Address (IA) stored at PacketPage base + 0158h, or whose hash-filtered DA matches one of the bits programmed into the Logical Address Filter (the hash filter is described later in this section).

5.3.0.2 Multicast Frames

For Multicast Frames, the first bit of the DA is a "1" (DA[0] = 1), indicating that the frame is a Logical Address. The address filter accepts Multicast frames whose hash-filtered DA matches one of the bits programmed into the Logical Address Filter (the hash filter is described later is this section). As shown in Table 25, Broadcast Frames can be accepted as Multicast frames under a very specific set of conditions.

5.3.0.3 Broadcast Frames

Frames with DA equal to FFFF FFFF FFFFh are broadcast frames. In addition, the CS8900A can be configured for Promiscuous Mode, in which case it will accept all receive frames, irrespective of DA.

5.3.1 Configuring the Destination Address Filter

The DA filter is configured by programming five DA filter bits in the RxCTL register (Register 5): IAHashA, PromiscuousA, MulticastA, IndividualA, and BroadcastA. Four of these bits are associated with four status bits in the RxEvent register (Register 4): IAHash, Hashed, IndividualAdr, and Broadcast. The RxEvent register reports the results of the DA filter for a given receive frame. The bits associated with DA filtering are summarized below:

Bit #	RxCTL Register 5	RxEvent Register 4
6	IAHashA	IAHash (used only if IAHashA = 1)
7	PromiscuousA	
9	MulticastA	Hashed
A	IndividualA	IndividualAdr (used only if IndividualA = 1)
B	BroadcastA	Broadcast (used only if BroadcastA = 1)

The IAHashA, MulticastA, IndividualA, and BroadcastA bits are used independently. As a result, many DA filter combinations are possible. For example, if MulticastA and IndividualA are set, then all frames that are either Multicast or Individual Address frames are accepted. The PromiscuousA bit, when set, overrides the other four DA bits, and allows all valid frames to be accepted. Table 24 summarizes the configuration options available for DA filtering.

IAHashA	PromiscuousA	MulticastA	IndividualA	BroadcastA	Frames Accepted
0	0	0	1	0	Individual Address frames with DA matching the IA at PacketPage base + 0158h
1	0	0	0	0	Individual Address frames with DA that pass the hash filter (DA[0] must be “0”)
0	0	1	0	0	Multicast frames with DA that pass the hash filter (DA[0] must be “1”)
0	0	0	0	1	Broadcast frames
X	1	X	X	X	All frames

Table 24. DA Filtering Options

It may become necessary for the host to change the Destination Address (DA) filter criteria without resetting the CS8900A. This can be done as follows:

1) Clear SerRxON (Register 13, LineCTL, Bit 6) to prevent any additional receive frames while the filter is being changed.
2) Modify the DA filter bits (B, A, 9, 7, and 6) in the RxCTL register. Modify the Logical AddressFilteratPacketPagebase+0150h,ifnecessary. Modify the Individual Address at PacketPage base + 0158h, if necessary.
3) Set SerRxON to re-enable the receiver.

Because the receiver has been disabled, the CS8900A will ignore frames while the host is changing the DA filter.

5.3.2 Hash Filter

The hash filter is used to help determine which Multicast frames and which Individual Address frames should be accepted by the CS8900A.

5.3.2.1 Hash Filter Operation

See Figure 23. The DA of the incoming frame is passed through the CRC logic, generating a 32-bit CRC value. The six most-significant bits of the CRC are latched into the 6-bit hash register (HR). The contents of the HR are passed through a 6-to-64-bit decoder, asserting one of the decoder's outputs. The asserted output is compared with a corresponding bit in the 64-bit Logical Address Filter, located at PacketPage base + 0150h. If the decoder output and the Logical Address Filter bit match, the frame passes the hash filter and the Hashed bit (Register 4, RxEvent, Bit 9) is set. If the two do not match, the frame fails the filter and the Hashed bit is clear.

Whenever the hash filter is passed by a "good" frame, the RxOK bit (Register 4, RxEvent, Bit 8) is set and the bits in the HR are mapped to the Hash Table Index bits (Register 4, RxEvent, Bits A through F).

5.3.3 Broadcast Frame Hashing Exception

Table 25 describes in detail the content of the RxEvent register for each output of the hash and address filters, and describes an exception to normal processing. That exception can occur when when the hash-filter Broadcast address matches a bit in the Logical Address Filter. To properly account for this exception, the software driver should use the following test to determine if the RxEvent register contains a normal RxEvent (meaning bits E-A are used for Extra data, Runt, CRC Error, Broadcast and IndividualAdr) or a hash-table RxEvent (meaning bits F-A contain the Hash Table Index).

If bit Hashed =0, or bit RxOK=0, or (bits F-A = 02h and the destination address is all ones) then RxEvent contains a normal RxEvent, else RxEvent contained a hash RxEvent.

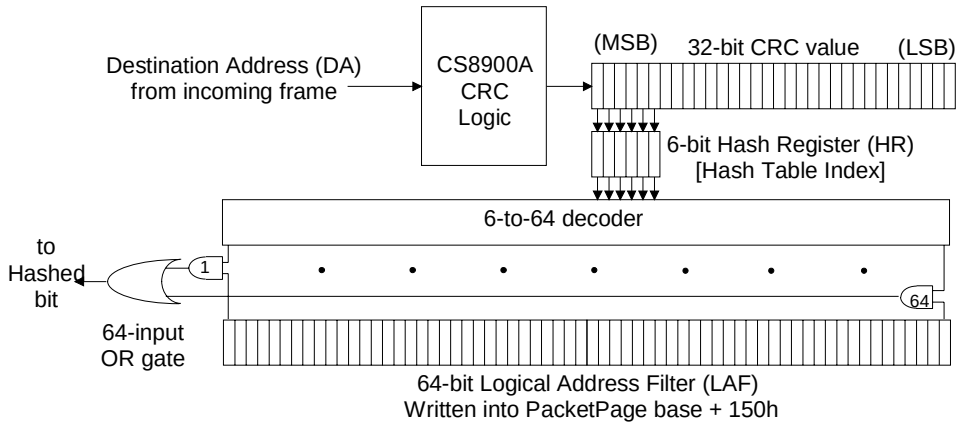

Figure 23. Hash Filter Operation

Address Type of Received Frame	Erred Frame?	Passes Hash Filter?	Contents of RxEvent			
			Bits F-A	Bit 9 Hashed	Bit 8 RxOK	Bit 6 IAHash
Individual Address	no	yes	Hash Table Index	1	1	1
	no	no	ExtraData Runt CRC Error Broadcast Individual Adr	0	1	0
	yes	don't care	ExtraData Runt CRC Error Broadcast Individual Adr	0	0	0
Multicast Address	no	yes	Hash table index	1	1	0
	no	no	ExtraData Runt CRC Error Broadcast Individual Adr	0	1	0
	yes	don't care	ExtraData Runt CRC Error Broadcast Individual Adr	0	0	0
Broad-cast Address	no	yes (Note 6)	ExtraData Runt CRC Error Broadcast Individual Adr (actual value X00010)	1	1	0
	no	yes (Note 7)	ExtraData Runt CRC Error Broadcast Individual Adr	0	1	0
	no	no	ExtraData Runt CRC Error Broadcast Individual Adr	0	1	0
	yes	don't care	ExtraData Runt CRC Error Broadcast Individual Adr	0	0	0

Notes: 6. Broadcast frames are accepted as Multicast frames if and only if all the following conditions are met simultaneously:
a) the Logical Address Filter is programmed as: (MSB) 0000 8000 0000 0000h (LSB). Note that this LAF value corresponds to a Multicast Addresses of both all 1s and 03-00-00-00-00-01.
b) the Rx Control Register (register 5) is programmed to accept IndividualA, MulticastA, RxOK-only, and the following address filters were enabled: IAHashA and BroadcastA.

7. NOT (Note 1).

Table 25. Contents of RxEvent Upon Various Conditions

5.4 Receive DMA

5.4.1 Overview

The CS8900A supports a direct interface to the host DMA controller allowing it to transfer receive frames to host memory via slave DMA. The DMA option applies only to receive frames, and not transmit operation. The CS8900A offers three possible Receive DMA modes:

1) Receive-DMA-only mode: All receive frames are transferred via DMA.

2) Auto-Switch DMA: DMA is used only when needed to help prevent missed frames.

3) StreamTransfer: DMA is used to minimize the number of interrupts to the host.

This section provides a description of Receive-DMA-only mode. Section 5.5 on page 93 describes Auto-Switch DMA and Section 5.6 on page 96 describes StreamTransfer.

5.4.2 Configuring the CS8900A for DMA Operation

The CS8900A interfaces to the host DMA controller through one pair of the DMA request/acknowledge pins (see Section 3.2 on page 18 for a description of the CS8900A's DMA interface).

Four 16-bit registers are used for DMA operation. These are described in Table 26.

Receive-DMA-only mode is enabled by setting the RxDMAonly bit (Register 3, RxCFG, Bit 9).

Note: If the RxDMAonly bit and the AutoRxDMAE bit (Register 3, RxCFG, Bit A) are both set, then RxDMAonly takes precedence, and the CS8900A is in DMA mode for all receive frames.

5.4.3 DMA Receive Buffer Size

In receive DMA mode, the CS8900A stores received frames (along with their status and length) in a circular buffer located in host memory space.

PacketPage Address	Register Description
0024h	**DMA Channel Number:** DMA channel number (0, 1, or 2) that defines the DMARQ/DMACK pin pair used.
0026h	**DMA Start of Frame:** 16-bit value that defines the offset from the DMA base address to the start of the most recently transferred received frame.
0028h	**DMA Frame Count:** The lower 12 bits define the number of valid frames transferred via DMA since the last read-out of this register. The upper 4 bits are reserved and not applicable.
002Ah	**DMA Byte Count:** Defines the number of bytes that have been transferred via DMA since the last read-out of this register.

Table 26. Receive DMA Registers

The size of the circular buffer is determined by the RxDMAsize bit (Register 17, BusCTL, Bit D). When RxDMAsize is clear, the buffer size is 16 Kbytes. When RxDMAsize is set, the buffer is 64 Kbytes. It is the host's task to locate and keep track of the DMA receive buffer's base address. The DMA Start-of-Frame register is the only circuit affected by this bit.

APPLICATION NOTE: As a result of the PC architecture, DMA cannot occur across a 128K boundary in memory. Thus, the DMA buffer reserved for the CS8900A must not cross a 128K boundary in host memory if DMA operation is desired. Requesting a 64K, rather than a 16K buffer, increases the probability of crossing a 128K boundary. After the driver requests a DMA buffer, the driver must check for a boundary crossing. If the boundary is crossed, then the driver must disable DMA functionality.

5.4.4 Receive-DMA-Only Operation

If space is available, an incoming frame is temporarily stored in on-chip RAM. When the entire frame has been received, pre-processed, and accepted, the CS8900A signals the DMA controller that a frame is to be transferred to host memory by driving the selected DMA Request pin high. The DMA controller acknowledges the request by driving the DMA Acknowledge pin low. The CS8900A then transfers the contents of the RxStatus register (PacketPage base + 0400h) and the RxLength register (PacketPage base + 0402h) to host memory, followed by the frame data. If the DMABurst bit (Register 17, BusCTL, Bit B) is clear, the DMA Request pin remains high until the entire frame is transferred. If the DMABurst bit is set, the DMA Request pin (DMARQ) remains high for approximately 28 ms then goes low for approximately 1.3 ms to give the CPU and other peripherals access to the bus.

When the transfer is complete, the CS8900A does the following:

- updates the DMA Start-of-Frame register (PacketPage base + 0026h);
- updates the DMA Frame Count register (PacketPage base + 0028h);
- updates DMA Byte Count register (PacketPage base + 002Ah);
- sets the RxDMAFrame bit (Register C, BufEvent, Bit 7); and,
- deallocates the buffer space used by the transferred frame.

In addition, if the RxDMAiE bit (Register B, BufCFG, Bit 7) is set, a corresponding interrupt occurs.

When the host processes DMAed frames, it must read the DMA Frame Count register.

Whenever a receive frame is missed (lost) due to insufficient receive buffer space, the RxMISS counter (Register 10) is incremented. A missed receive frame causes the counter to increment in either DMA or non-DMA modes.

Note that when in DMA mode, reading the contents of the RxEvent register will return 0000h. Status

information should be obtained from the DMA buffer.

5.4.5 Committing Buffer Space to a DMAed Frame

Although a receive frame may occupy space in the host memory's circular DMA buffer, the CS8900A's Memory Manager does not commit the buffer space to the receive frame until the entire frame has been transferred and the host learns of the frame's existence by reading the Frame Count register (PacketPage base + 0028h).

When the CS8900A commits DMA buffer space to a particular DMAed receive frame (termed a committed received frame), no data from subsequent frames can be written to that buffer space until the committed received frame is freed from commitment. (The committed received frame may or may not have been received error free.)

A committed DMAed receive frame is freed from commitment by any one of the following conditions:

1) The host rereads the DMA Frame Count register (PacketPage base + 0028h).
2) New frames have been transferred via DMA, and the host reads the BufEvent register (either directly or from the ISQ) and sees that the RxDMAFrame bit is set (this condition is termed an "implied Skip").
3) The host issues a Reset-DMA command by setting the ResetRxDMA bit (Register 17, BusCTL, Bit 6).

5.4.6 DMA Buffer Organization

When DMA is used to transfer receive frames, the DMA Start-of-Frame register (PacketPage Base + 0026h) defines the offset from the DMA base to the start of the most recently transferred received frame. Frames stored in the DMA buffer are transferred as words and maintain double-word (32-bit) alignment. Unfilled memory space between successive frames stored in the DMA buffer may result from double-word alignment. These "holes" may be 1, 2, or 3 bytes, depending on the length of the frame preceding the hole.

5.4.7 RxDMAFrame Bit

The RxDMAFrame bit (Register C, BufEvent, bit 7) is controlled by the CS8900A and is set whenever the value in the DMA Frame Count register is non-zero. The host cannot clear RxDMAFrame by reading the BufEvent register (Register C). Table 27 summarizes the criteria used to set and clear RxDMAFrame.

	Non-Stream Transfer Mode	Stream Transfer Mode (see Section 5.6)
To set RxDMAFrame	The RxDMAFrame bit is set whenever the DMA Frame Count register (PacketPage base + 0028h) transitions to non-zero.	The RxDMAFrame bit is set at the end of a Stream Transfer cycle.
To Clear RxDMAFrame	The DMA Frame Count is zero.	The DMA Frame Count is zero.

Table 27. RxDMAFrame Bit

5.4.8 Receive DMA Example Without Wrap-Around

Figure 24 shows three frames stored in host memory by DMA without wrap-around.

5.4.9 Receive DMA Operation for RxDMA-Only Mode

In an RxDMAOnly mode, a system DMA moves all the received frames from the on-chip memory to an external 16- or 64-Kbyte buffer memory. The received frame must have passed the destination address filter, and must be completely received. Usually, the DMA receive frame interrupt (RxDMAiE, bit 7, Register B, BufCFG) is set so that the CS8900A generates an interrupt when a frame is transferred by DMA. Figure 25 shows how a DMA Receive Frame interrupt is processed.

In the interrupt service routine, the BufEvent register (register C), bit RxDMA Frame (bit 7) indicates that one or more receive frames were transferred using DMA. The software driver should maintain a pointer (e.g. PDMA_START) that will point to the beginning of a new frame. After the CS8900A is initialized and before any frame is received, pointer PDMA_START points to the beginning of the DMA buffer memory area. The first read of the DMA Frame Count, CDMA, commits the memory covered by the CDMA count, and the DMA cannot overwrite this committed space until the space is freed. The driver then processes the frames described by the CDMA count and makes a second read of the DMA frame count. This second read frees the buffer memory space described by the CDMA counter.

During the frame processing, the software should advance the PDMA_START pointer. At the end of processing a frame, pointer PDMA_START should be made to align with a double-word boundary. The software remains in the loop until the DMA frame count read is zero.

5.5 Auto-Switch DMA

5.5.1 Overview

The CS8900A supports a unique feature, Auto-Switch DMA, that allows it to switch between Memory or I/O mode and Receive DMA automatically. Auto-Switch DMA allows the CS8900A to realize the performance advantages of Memory or I/O mode while minimizing the number of missed frames that could result due to slow processing by the host.

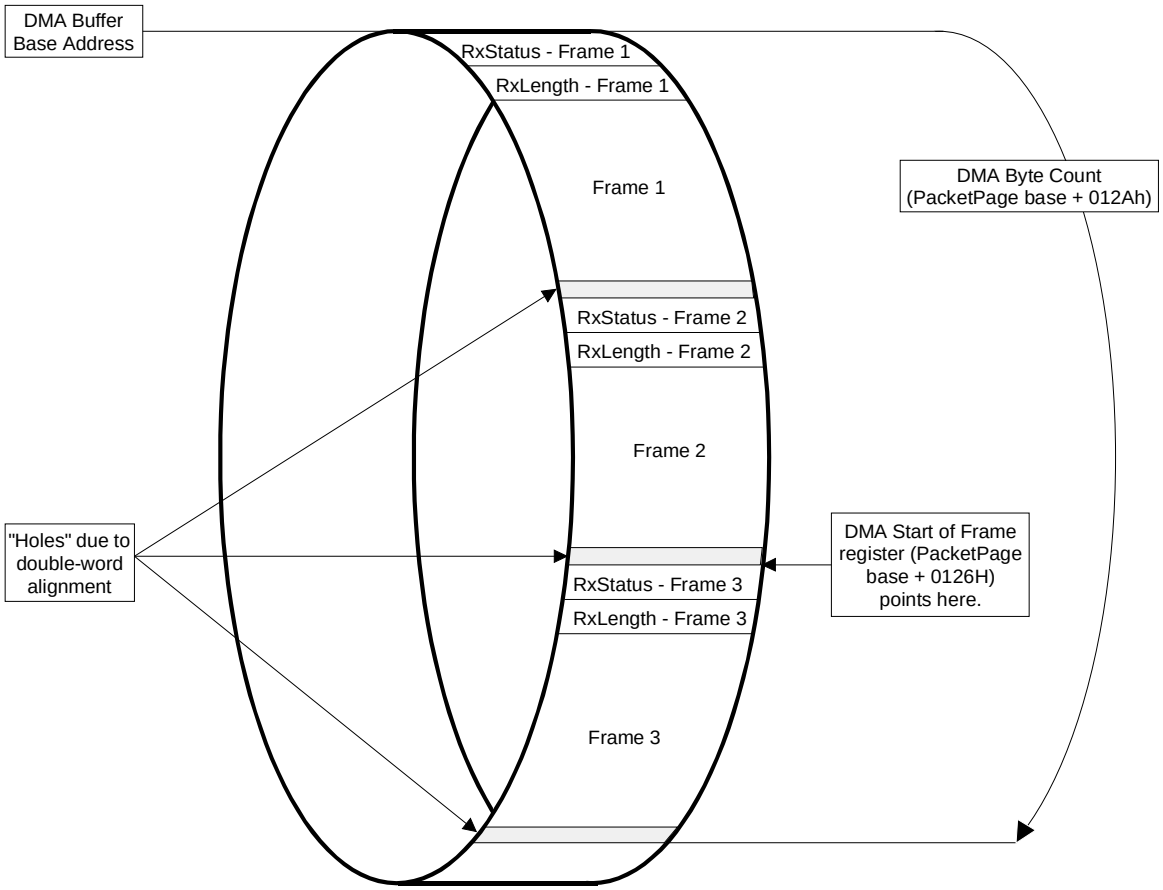

Figure 24. Example of Frames Stored in DMA Buffer

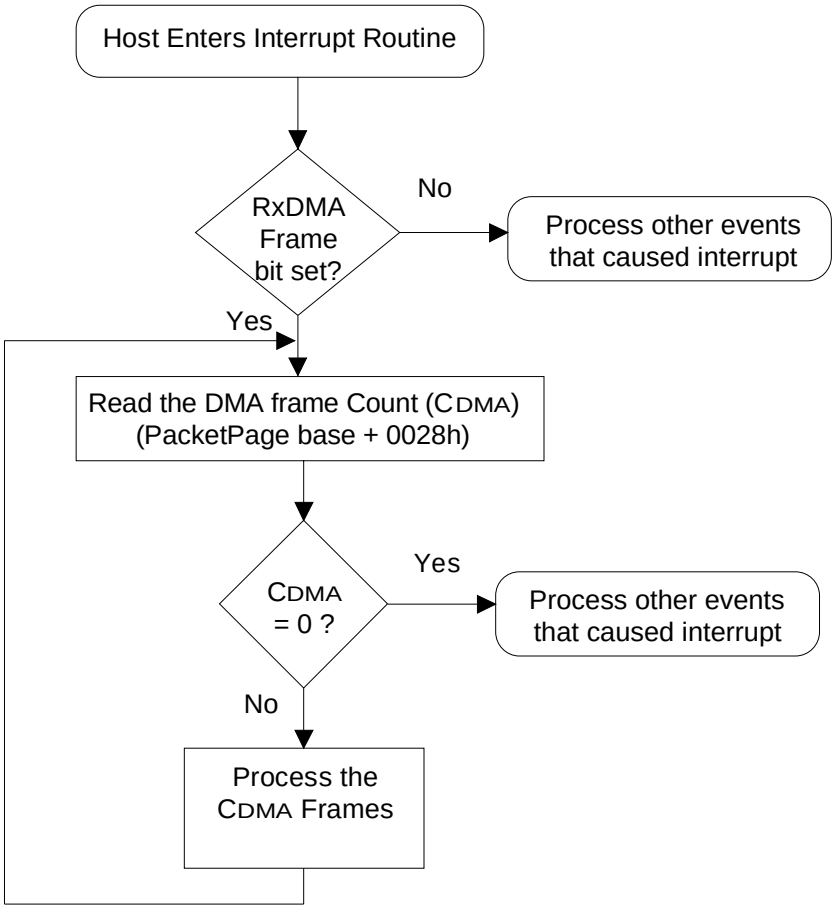

Figure 25. RxDMA Only Operation

5.5.2 Configuring the CS8900A for Auto-Switch DMA

Auto-Switch DMA mode requires the same configuration as Receive-DMA-only mode, with one exception: the AutoRxDMAE bit (Register 3, RxCFG, Bit A) must be set, and the RxDMAonly bit (Register 3, RxCFG, Bit 9) must be clear (see Section 5.4 on page 90, Configuring the CS8900A for DMA Operation). In Auto-Switch DMA mode, the CS8900A operates in non-DMA mode if possible, only switching to slave DMA if necessary.

Note that if the AutoRxDMAE bit and the RxDMAonly bit (Register 3, RxCFG, bit 9) are both set, the CS8900A uses DMA for all receive frames.

5.5.3 Auto-Switch DMA Operation

Whenever a frame begins to be received in Auto-Switch DMA mode, the CS8900A checks to see if there is enough on-chip buffer space to store a maximum length frame. If there is, the incoming frame is pre-processed and buffered as normal. If there isn't, the CS8900A's MAC engine compares the frame's Destination Address (DA) to the criteria programmed into the DA filter. If the incoming DA fails the DA filter, the frame is discarded. If the DA passes the DA filter, the CS8900A automatically switches to DMA mode and starts transferring the frame(s) currently being held in the on-chip buffer into host memory. This frees up buffer space for the incoming frame.

Figure 26 shows the steps the CS8900A goes through in determining when to automatically switch to DMA.

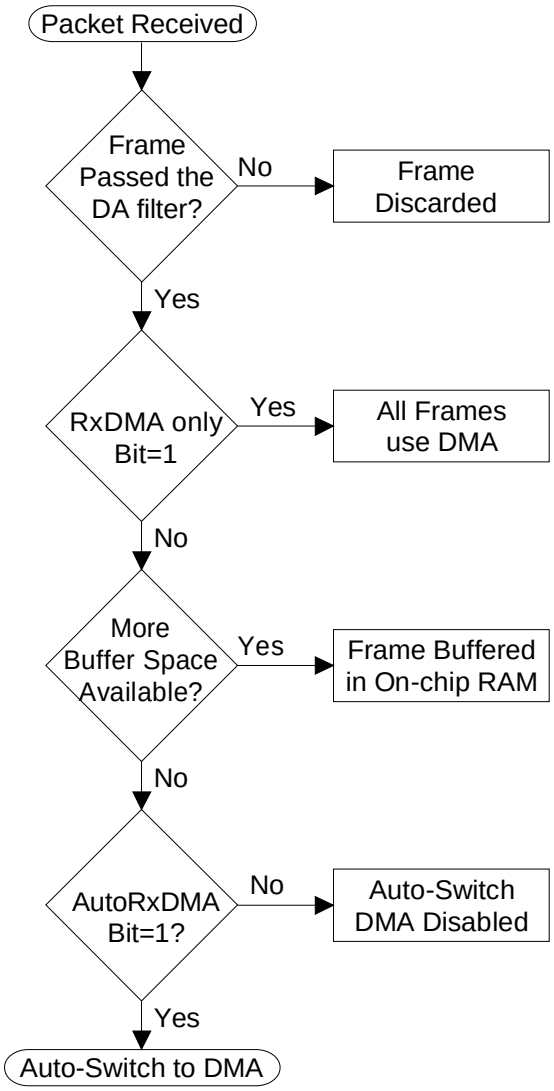

Figure 26. Conditions for Switching to DMA

Whenever the CS8900A automatically enters DMA, at least one complete frame is already stored in the on-chip buffer. Because frames are transferred to the host in the same order as received (first in, first out), the beginning of the received frame that triggered the switch to DMA is not the first frame to be transferred. Instead, the oldest noncommitted frame in the on-chip buffer is the first frame to use DMA. When DMA begins, any pending RxEvent reports in the Interrupt Status Queue are discarded because the host cannot process those events until the corresponding frames have been completely DMAed.

Auto-Switch DMA works only on entire received frames. The CS8900A does not use Auto-Switch DMA to transfer partial frames. Also, when a frame has been committed (see Section 5.2.5 on page 84), the CS8900A will not switch to DMA mode until the committed frame has been transferred completely or skipped.

After a complete frame has been moved to host memory, the CS8900A updates the DMA Start-of-Frame register (PacketPage base + 0126h), the DMA Frame Count register (PacketPage base + 0128h), and the DMA Byte Count register, then sets the RxDMAFrame bit (Register C, BufEvent, bit 7). If RxDMAiE (Register B, BufCFG, bit 7) is set, a corresponding interrupt occurs.

5.5.4 DMA Channel Speed vs. Missed Frames

When the CS8900A starts DMA, the entire oldest, noncommitted frame must be placed in host memory before on-chip buffer space will be freed for the next incoming frame. If the oldest frame is relatively large, and the next incoming frame also large, the incoming frame may be missed, depending on the speed of the DMA channel. If this happens, the CS8900A will increment the RxMiss counter (Register 10) and clear any event reports (RxEvent and BufEvent) associated with the missed frame.

5.5.5 Exit From DMA

When the CS8900A has activated receive DMA, it remains in DMA mode until all of the following are true:

- The host processes all RxEvent and BufEvent reports pending in the ISQ.

- The host reads a zero value from the DMA Frame Count register (PacketPage base + 0028h).
- The CS8900A is not in the process of transferring a frame via DMA.

5.5.6 Auto-Switch DMA Example

Figure 27 shows how the CS8900A enters and exits Auto-Switch DMA mode.

5.6 StreamTransfer

5.6.1 Overview

The CS8900A supports an optional feature, StreamTransfer, that can reduce the amount of CPU overhead associated with frame reception. StreamTransfer works during periods of high receive activity by grouping multiple receive events into a single interrupt, thereby reducing the number of receive interrupts to the host processor. During periods of peak loading, StreamTransfer will eliminate 7 out of every 8 interrupts, cutting interrupt overhead by up to 87%.

5.6.2 Configuring the CS8900A for StreamTransfer

StreamTransfer is enabled by setting the StreamE bit along with either the AutoRxDMAE bit or the RxDMAonly bit in register Receiver Configuration (register 3). (StreamTransfer must not be selected unless either one of AutoRxDMAE or RxDMAonly is selected.)StreamTransfer only applies to "good" frames (frames of legal length with valid CRC). Therefore, the RxOKA bit and the RxOKiE bit must both be set. Finally, StreamTransfer works on whole packets and is not compatible with early interrupts. This requires that the RxDestiE bit and the Rx128iE bit both be clear.

Table 28 summarizes how to configure the CS8900A for StreamTransfer.

Register Name	Bit	Bit Name	Value
Register 3, RxCFG	7	StreamE	1
	8	RxOKiE	1
	9 or A	RxDMAonly or AutoRxDMA	1 or 1
Register 5, RxCTL	8	RxOKA	1
Register B, BufCFG	7	RxDMAiE	1
	F	RxDestiE	0
	B	Rx128iE	0

Table 28. Stream Transfer Configuration

5.6.3 StreamTransfer Operation

When StreamTransfer is enabled, the CS8900A will initiate a StreamTransfer cycle whenever two or more frames with the following characteristics are received:

1) pass the Destination Address filter;
2) are of legal length with valid CRC; and,
3) are spaced "back-to-back" (between 9.6 and 52 µs apart).

During a StreamTransfer cycle the CS8900A does the following:

- delays the normal RxOK interrupt associated with the first receive frame;
- switches to receive DMA mode;
- transfers up to eight receive frames into host memory via DMA;
- updates the DMA Start-of-Frame register (PacketPage base + 0026h);
- updates the DMA Frame Count register (PacketPage base + 0028h);
- updates DMA Byte Count register (PacketPage base + 002Ah);
- sets the RxDMAFrame bit (Register C, BufEvent, Bit 7); and,
- generates an RxDMAFrame interrupt.

5.6.4 Keeping StreamTransfer Mode Active

When the CS8900A initiates a StreamTransfer cycle, it will continue to execute cycles as long as the following conditions hold true:

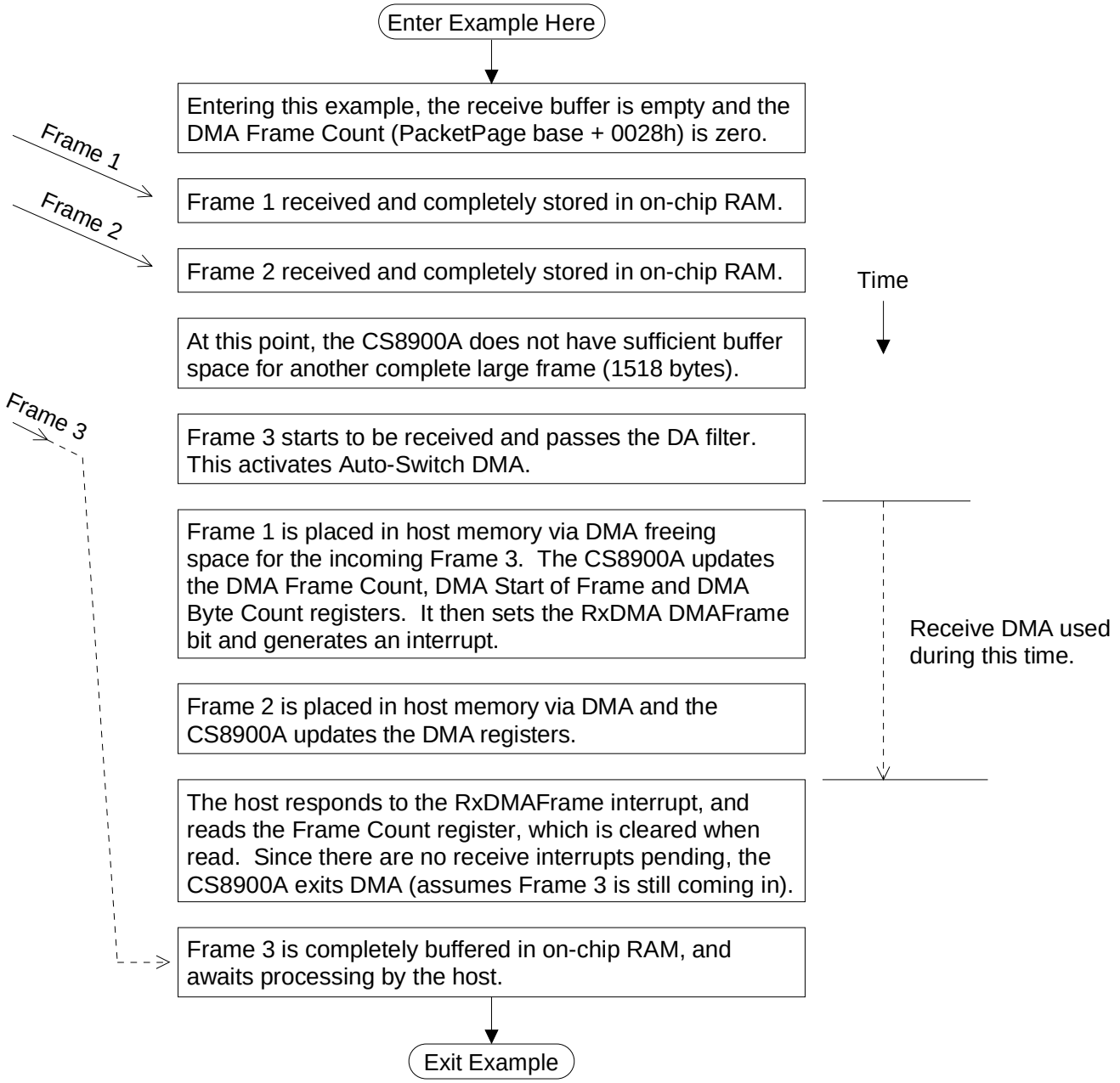

Figure 27. Example of Auto-Switch DMA

- all packets received are of legal length with valid CRC;
- each packet follows its predecessor by less than 52 ms; and,
- the DA of each packet passes the DA filter.

If any of these conditions are not met, the CS8900A exits StreamTransfer by generating RxOK and RxDMA interrupts. The CS8900A then returns to either Memory, I/O, or DMA mode, depending on configuration.

5.6.5 Example of StreamTransfer

Figure 28 shows how four back-to-back frames, followed by five back-to-back frames, would be received without StreamTransfer. Figure 29 shows how the same sequence of frames would be received with StreamTransfer.

5.6.6 Receive DMA Summary

Table 29 summarize the Receive DMA configuration options supported by the CS8900A.

RxDMAonly (Register 3, RxCFG,Bit 9)	AutoRxDMAiE (Register 3, RxCFG, Bit A)	RxDMAiE (Register B, BufCFG, Bit 7)	RxOKiE (Register 3, RxCFG, Bit 8)	CS8900A Configuration
1	NA	0	NA	Receive DMA used for all receive frames, without interrupts.
1	NA	1	NA	Receive DMA used for all receive frames, with BufEvent interrupts.
0	1	0	0	Auto-Switch DMA used if necessary, without interrupts.
0	1	1	1	Auto-Switch DMA used if necessary, with RxEvent and BufEvent interrupts possible.
0	0	NA	NA	Memory or I/O Mode only.

Table 29. Receive DMA Configuration Options

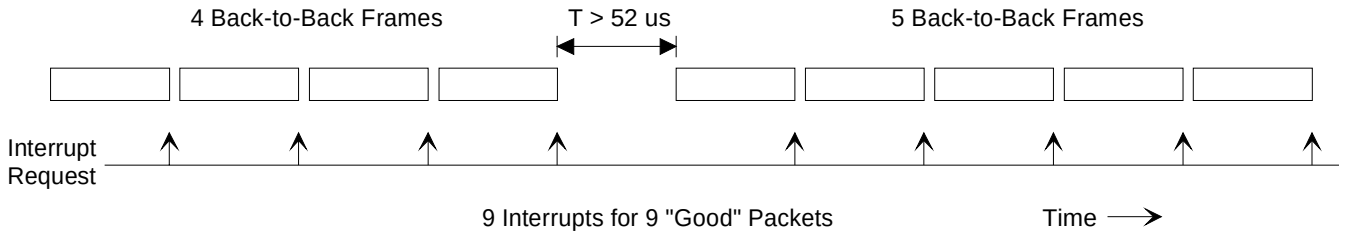

Figure 28. Receive Example Without Stream Transfer

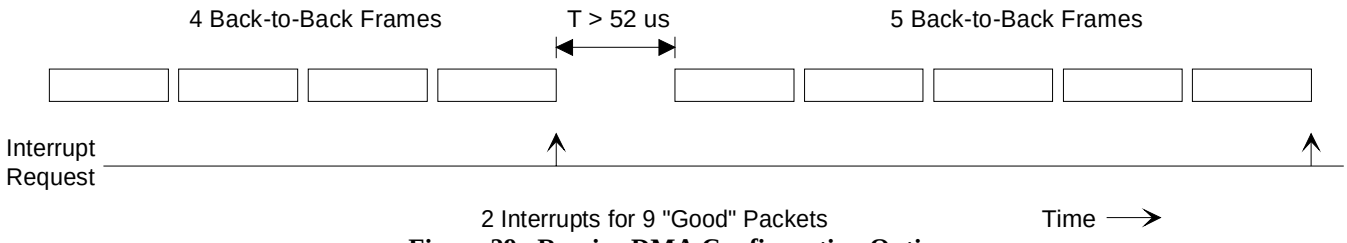

Figure 29. Receive DMA Configuration Options

5.7 Transmit Operation

5.7.1 Overview

Packet transmission occurs in two phases. In the first phase, the host moves the Ethernet frame into the CS8900A's buffer memory. The first phase begins with the host issuing a Transmit Command.

This informs the CS8900A that a frame is to be transmitted and tells the chip when (i.e. after 5, 381, or 1021 bytes have been transferred or after the full frame has been transferred to the CS8900A) and how the frame should be sent (i.e. with or without CRC, with or without pad bits, etc.). The host follows the Transmit Command with the Transmit Length, indicating how much buffer space is required. When buffer space is available, the host writes the Ethernet frame into the CS8900A's internal memory, using either Memory or I/O space.

In the second phase of transmission, the CS8900A converts the frame into an Ethernet packet then transmits it onto the network. The second phase begins with the CS8900A transmitting the preamble and Start-of-Frame delimiter as soon as the proper number of bytes has been transferred into its transmit buffer (5, 381, 1021 bytes or full frame, depending on configuration). The preamble and Start-of-Frame delimiter are followed by the data transferred into the on-chip buffer by the host (Destination Address, Source Address, Length field and LLC data). If the frame is less than 64 bytes, including CRC, the CS8900A adds pad bits if configured to do so. Finally, the CS8900A appends the proper 32-bit CRC value.

5.7.2 Transmit Configuration

After each reset, the CS8900A must be configured for transmit operation. This can be done automatically using an attached EEPROM, or by writing configuration commands to the CS8900A's internal registers (see Section 3.4 on page 21). The items that must be configured include which physical interface to use and which transmit events cause interrupts.

5.7.2.1 Configuring the Physical Interface

Configuring the physical interface consists of determining which Ethernet interface should be active (10BASE-T or AUI), and enabling the transmit logic for serial transmission. Configuring the Physical Interface is accomplished via the LineCTL register (Register 13) and is described in Table 30.

Register 13, LineCTL		
Bit	**Bit Name**	**Operation**
7	SerTxON	When set, transmission enabled.
8	AUIonly	When set, AUI selected (takes precedence over AutoAUI/10BT). When clear, 10BASE-T selected.
9	AutoAUI/10BT	When set, automatic interface selection enabled.
B	Mod BackoffE	When set, the modified backoff algorithm is used. When clear, the standard backoff algorithm is used.
D	2-part DefDis	When set, two-part deferral is disabled.

Table 30. Physical Interface Configuration

Note that the CS8900A transmits in 10BASE-T mode when no link pulses are being received only if bit DisableLT is set in register Test Control (Register 19).

5.7.2.2 Selecting which Events Cause Interrupts

The TxCFG register (Register 7) and the BufCFG register (Register B) are used to determine which transmit events will cause interrupts to the host processor. Tables 31 and 32 describe the interrupt enable (iE) bits in these registers.

5.7.3 Changing the Configuration

When the host configures these registers it does not need to change them for subsequent packet transmissions. If the host does choose to change the TxCFG or BufCFG registers, it may do so at any time. The effects of the change are noticed immediately. That is, any changes in the Interrupt Enable (iE) bits may affect the packet currently being transmitted.

Register 7, TxCFG		
Bit	**Bit Name**	**Operation**
6	Loss-of-CRSiE	When set, there is an interrupt whenever the CS8900A fails to detect Carrier Sense after transmitting the preamble (applies to the AUI only).
7	SQErroriE	When set, there is an interrupt whenever there is an SQE error.
8	TxOKiE	When set, there is an interrupt whenever a frame is transmitted successfully..
9	Out-of-windowiE	When set, there is an interrupt whenever a late collision is detected.
A	JabberiE	When set, there is an interrupt whenever there is a jabber condition.
B	AnycolliE	When set, there is an interrupt whenever there is a collision.
F	16colliE	When set, there is an interrupt whenever the CS8900A attempts to transmit a single frame 16 times.

Table 31. Transmitting Interrupt Configuration

Register B, BufCFG		
Bit	**Bit Name**	**Operation**
8	Rdy4TxiE	When set, there is an interrupt whenever buffer space becomes available for a transmit frame (used with a Transmit Request).
9	TxUnder runiE	When set, there is an interrupt whenever ther CS8900A runs out of data after transmit has started.
C	TxCol OvfloiE	When set, there is an interrupt whenever the TxCol counter overflows.

Table 32. Transmit Interrupt Configuration

If the host chooses to change bits in the LineCTL register after initialization, the ModBackoffE bit and any receive related bit (LoRxSquelch, SerRxON) may be changed at any time. However, the Auto AUI/10BT and AUIonly bits should not be changed while the SerTxON bit is set. If any of these three bits are to be changed, the host should first clear the SerTxON bit (Register 13, LineCTL, Bit 7), and then set it when the changes are complete.

5.7.4 Enabling CRC Generation and Padding

Whenever the host issues a Transmit Request command, it must indicate whether or not the Cyclic Redundancy Check (CRC) value should be appended to the transmit frame, and whether or not pad bits should be added (if needed). Table 33 describes how to configure the CS8900A for CRC generating and padding.

Register 9, TxCMD		
Inhibit CRC (Bit C)	**TxPad Dis (Bit D)**	**Operation**
0	0	Pad to 64 bytes if necessary (including CRC).
1	0	Send a runt frame if specified length less than 60 bytes.
0	1	Pad to 60 bytes if necessary (without CRC).
1	1	Send runt if specified length less than 64. The CS8900A will not transmit a frame that is less than 3 bytes.

Table 33. CRC and Paddling Configuration

5.7.5 Individual Packet Transmission

Whenever the host has a packet to transmit, it must issue a Transmit Request to the CS8900A consisting of the following three operations in the exact order shown:

1) The host must write a Transmit Command to the TxCMD register (PacketPage base + 0144h). The contents of the TxCMD register may be read back from the TxCMD register (Register 9).

2) The host must write the frame's length to the TxLength register (PacketPage base + 0146h).

3) The host must read the BusST register (Register 18)

The information written to the TxCMD register tells the CS8900A how to transmit the next frame.

The bits that must be programmed in the TxCMD register are described in Table 34.

Register 9, TxCMD			
Bit		**Bit Name**	**Operation**
6	7	Tx Start	
clear	clear		Start preamble after 5 bytes have been transferred to the CS8900A.
clear	set		Start preamble after 381 bytes have been transferred to the CS8900A.
set	clear		Start preamble after 1021 bytes have been transferred to the CS8900A.
set	set		Start preamble after entire frame has been transferred to the CS8900A.
8		Force	When set, the CS8900A discards any frame data currently in the transmit buffer.
9		Onecoll	When set, the CS8900A will not attempt to retransmit any packet after a collision.
C		InhibitCRC	When set, the CS8900A does not append the 32-bit CRC value to the end of any transmit packet.
D		TxPadDis	When set, the CS8900A will not add pad bits to short frames.

Table 34. Tx Command Configuration

For each individual packet transmission, the host must issue a *complete* Transmit Request. Furthermore, the host must write to the TxCMD register before each packet transmission, even if the contents of the TxCMD register does not change. The Transmit Request described above may be in either Memory Space or I/O Space.

5.7.6 Transmit in Poll Mode

In poll mode, Rdy4TxiE bit (Register B, BufCFG, Bit 8) must be clear (Interrupt Disabled). The transmit operation occurs in the following order and is shown in Figure 30.

1) The host bids for frame storage by writing the Transmit Command to the TxCMD register (memory base+ 0144h in memory mode and I/O base + 0004h in I/O mode).
2) The host writes the transmit frame length to the TxLength register (memory base + 0146h in memory mode and I/O base + 0006h in I/O mode). If the transmit length is erroneous, the command is discarded and the TxBidErr bit (Register 18, BusST, Bit 7) is set.
3) The host reads the BusST register. This read is performed in memory mode by reading Register 18, at memory base + 0138h. In I/O mode, the host must first set the PacketPage Pointer at the correct location by writing 0138h to the PacketPage Pointer Port (I/O base + 000Ah). The host can then read the BusST register from the PacketPage Data Port (I/O base + 000Ch).
4) After reading the register, the Rdy4TxNOW bit (Bit 8) is checked. If the bit is set, the frame can be written. If the bit is clear, the host must continue reading the BusST register (Register 18) and checking the Rdy4TxNOW bit (Bit 8) until the bit is set.

When the CS8900A is ready to accept the frame, the host transfers the entire frame from host memory to CS8900A memory using “REP” instruction (REP MOVS starting at memory base + 0A00h in memory mode, and REP OUT to Receive/Transmit Data Port (I/O base + 0000h) in I/O mode).

5.7.7 Transmit in Interrupt Mode

In interrupt mode, Rdy4TxiE bit (Register B, BufCFG, Bit 8) must be set for transmit operation. Transmit operation occurs in the following order and is shown in Figure 31.

1) The host bids for frame storage by writing the Transmit Command to the TxCMD register (memory base + 0144h in memory mode and I/O base + 0004h in I/O mode).
2) The host writes the transmit frame length to the TxLength register (memory base + 0146h in memory mode and I/O base + 0006h in I/O

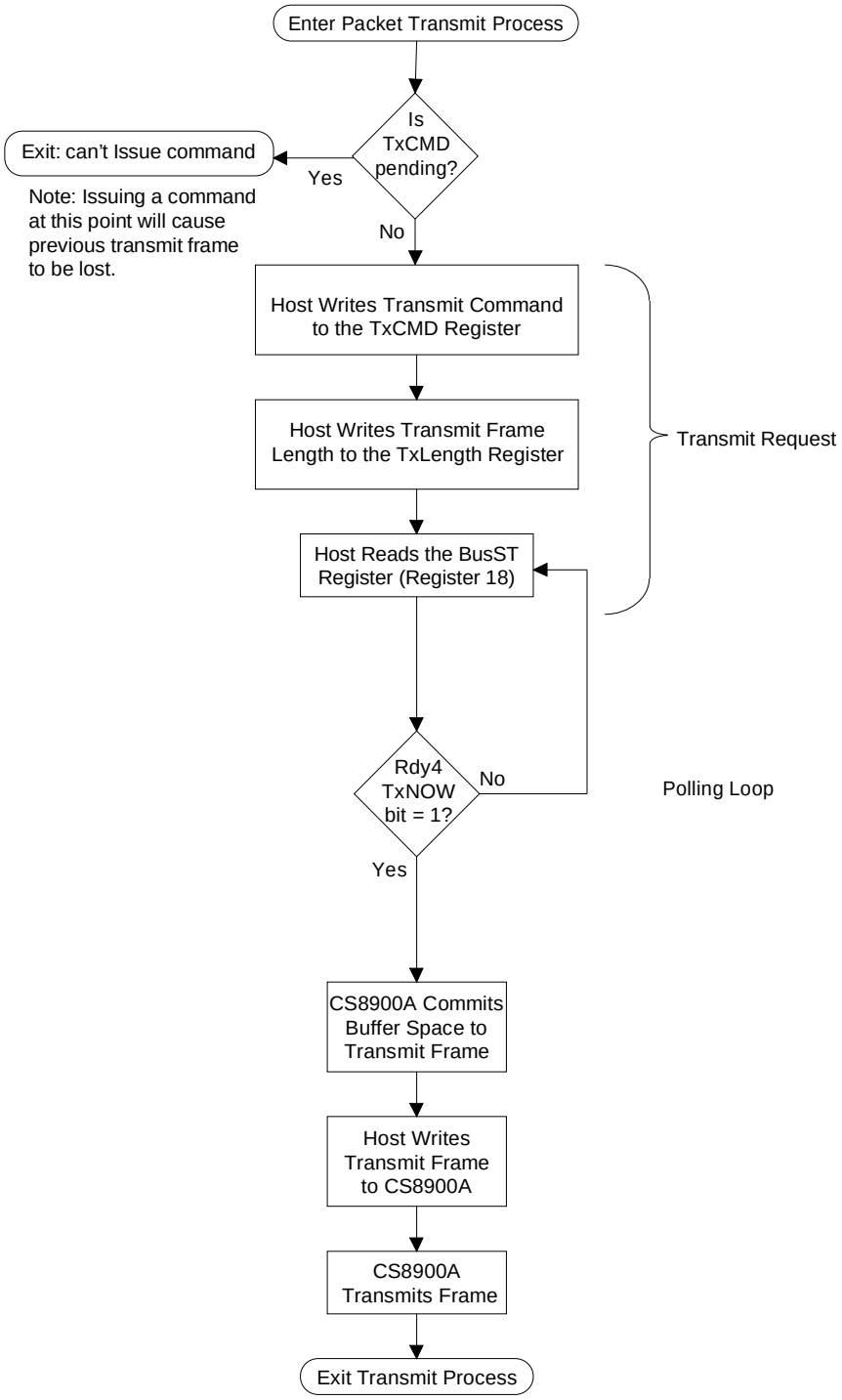

Figure 30. Transmit Operation in Polling Mode

mode). If the transmit length is erroneous, the command is discarded and the TxBidErr, bit 7, in BusST register is set.

3) The host reads the BusST register. This read is performed in memory mode by reading Register 18, at memory base + 0138h. In I/O mode, the host must first set the PacketPage Pointer at

the correct location by writing 0138h to the PacketPage Pointer Port (I/O base + 000Ah), it than can read the BusST register from the PacketPage Data Port (I/O base + 000Ch).After reading the register, the Rdy4TxNOW bit is checked. If the bit is set, the frame can be written to CS8900A memory. If Rdy4TxNOW is clear, the host will have to wait for the CS8900A buffer memory to become available at which time the host will be interrupted. On interrupt, the host enters the interrupt service routine and reads ISQ register (Memory base + 0120h in memory mode and I/O base + 0008h in I/O) and checks the Rdy4Tx bit (bit 8). If Rdy4Tx is clear then the CS8900A waits for the next interrupt. If Rdy4Tx is set, then the CS8900A is ready to accept the frame.

4) When the CS8900A is ready to accept the frame, the host transfers the entire frame from host memory to CS8900A memory using REP instruction (REP MOVS to memory base + 0A00h in memory mode, and REP OUT to Receive/Transmit Data Port (I/O base + 0000h) in I/O mode).

5.7.8 Completing Transmission

When the CS8900A successfully completes transmitting a frame, it sets the TxOK bit (Register 8, TxEvent, Bit 8). If the TxOKiE bit (Register 7, TxCFG, bit 8) is set, the CS8900A generates a corresponding interrupt.

5.7.9 Rdy4TxNOW vs. Rdy4Tx

The Rdy4TxNOW bit (Register 18, BusST, bit 8) is used to tell the host that the CS8900A is ready to accept a frame for transmission. This bit is used during the Transmit Request process or after the Transmit Request process to signal the host that space has become available when interrupts are not being used (i.e. the Rdy4TxiE bit (Register B, BufCFG, Bit 8) is not set). Also, the Rdy4Tx bit is used with interrupts and requires the Rdy4TxiE bit be set.

Figure 30 provides a diagram of error free transmission without collision.

5.7.10 Committing Buffer Space to a Transmit Frame

When the host issues a transmit request, the CS8900A checks the length of the transmit frame to see if there is sufficient on-chip buffer space. If there is, the CS8900A sets the Rdy4TxNOW bit. If not, and the Rdy4TxiE bit is set, the CS8900A waits for buffer space to free up and then sets the Rdy4Tx bit. If Rdy4TxiE is not set, the CS8900A sets the Rdy4TxNOW bit when space becomes available.

Even though transmit buffer space may be available, the CS8900A does not commit buffer space to a transmit frame until all of the following are true:

1) The host must issues a Transmit Request;
2) The Transmit Request must be successful; and,
3) Either the host reads that the Rdy4TxNOW bit (Register 18, BusST, Bit 8) is set, or the host reads that the Rdy4Tx bit (Register C, BufEvent, bit 8) is set.

If the CS8900A commits buffer space to a particular transmit frame, it will not allow subsequent frames to be written to that buffer space as long as the transmit frame is committed.

After buffer space is committed, the frame is subsequently transmitted unless any of the following occur:

1) The host completely writes the frame data, but transmission failed on the Ethernet line. There are three such failures, and these are indicated by three transmit error bits in the TxEvent register (Register 8): 16coll, Jabber, or Out-of-Window.

Or:

2) The host aborts the transmission by setting the Force (Register 9, TxCMD, bit 8) bit. In this case, the committed transmit frame, as well as

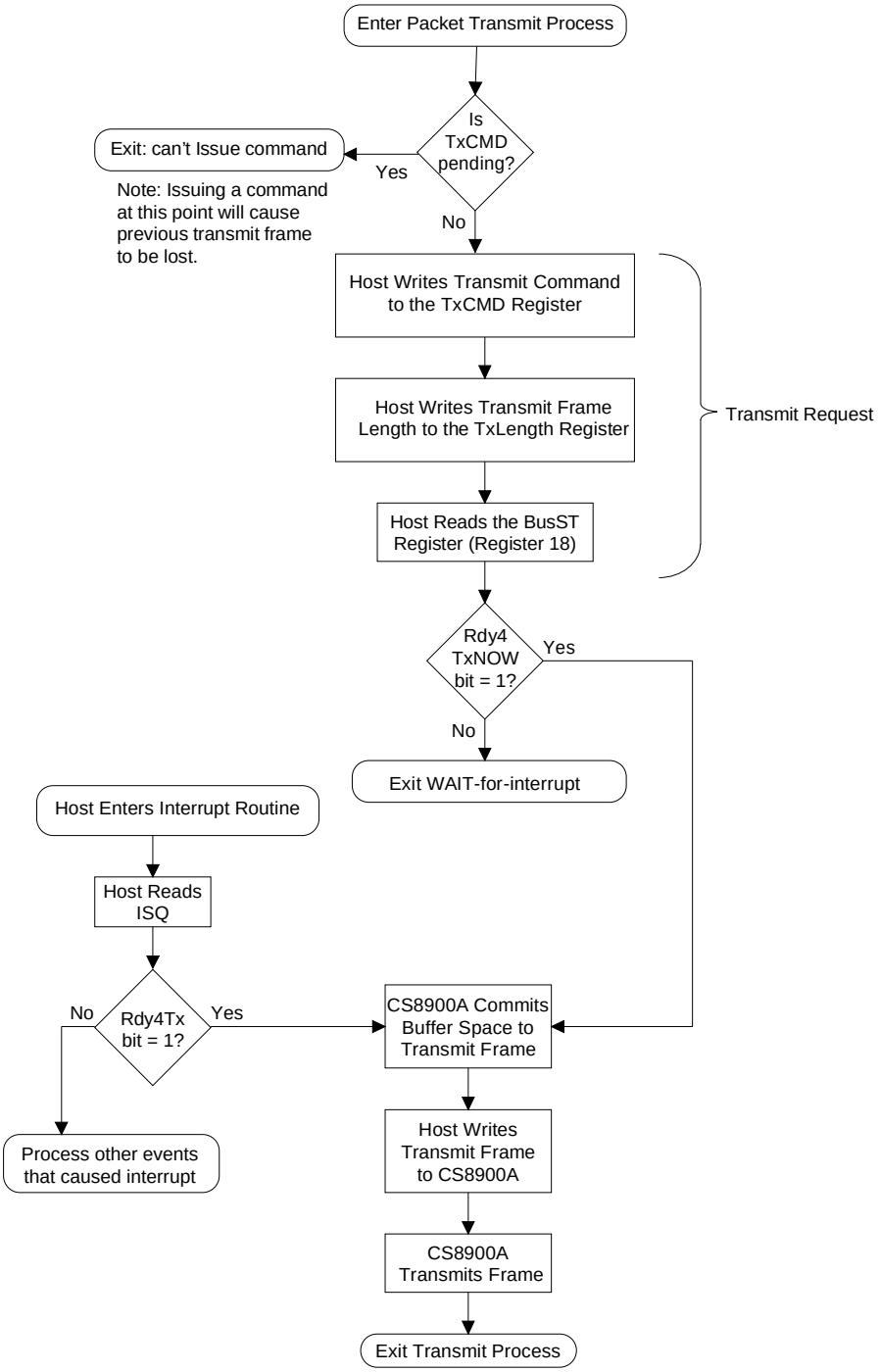

Figure 31. Transmit Operation in Interrupt Mode

any yet-to-be-transmitted frames queued in the on-chip memory, are cleared and not transmitted. The host should make TxLength = 0 when using the Force bit.

Or:

3) There is a transmit under-run, and the Tx-Underrun bit (Register C, BufEvent, Bit 9) is set.

Successful transmission is indicated when the TxOK bit (Register 8, TxEvent, Bit 8) is set.

5.7.11 Transmit Frame Length

The length of the frame transmitted is determined by the value written into the TxLength register (PacketPage base + 0146h) during the Transmit Request. The length of the transmit frame may be modified by the configuration of the TxPadDis bit (Register 9, TxCMD, Bit D) and the InhibitCRC bit (Register 9, TxCMD, Bit C). Table 35 defines how these bits affect the length of the transmit frame. In addition, it shows which frames the CS8900A will send.

5.8 Full duplex Considerations

The driver should not bid to transmit a long frame (i.e., a frame greater than 118 bytes) if the prior transmit frame is still being transmitted. The end of the transmission of this prior frame is indicated by a TxOK bit being set in the TxEvent register (register 8).

5.9 Auto-Negotiation Considerations

When the CS8900A is connected to an auto negotiation hub, and if auto-media detection is selected (bits 8 and 9 of register 13), then the CS8900A may not auto-select the 10BASE-T media. The cause of this situation is described in the following paragraphs.

The original IEEE 802.3 specification requires the MAC to wait until 4 valid link-pulses are received before asserting Link-OK. Any time an invalid link-pulse is received, the count is restarted. When auto-negotiation occurs, a transmitter sends FLPs (auto-negotiation Fast Link Pulses) bursts instead of the original IEEE 802.3 NLP (Normal Link Pulses).

If the hub is attempting to auto-negotiate with the CS8900A, the CS8900A will never get more than 1 "valid" link pulse (valid NLP). This is not a problem if the CS8900A is already sending link-pulses, because when the hub receives NLPs from the CS8900A, the hub is required to stop sending FLPs and start sending NLPs. The NLP transmitted by the hub will put the CS8900A into Link-OK.

However, if the CS8900A is in Auto-Switch mode, the CS8900A will never send any link-pulses, and the hub will never change from sending FLPs to sending NLPs.

Register 9, TxCMD		**Host specified transmit length at 0146h (in bytes)**			
TxPad-Dis (Bit D)	InhibitCRC (Bit C)	3 < TxLength < 60	60 < TxLength < 1514	1514 < TxLength < 1518	TxLength > 1518
0	0	Pad to 60 and add CRC	Send frame and add CRC [Normal Mode]	Will not send	Will not send
0	1	Pad to 60 and send without CRC	Send frame without CRC	Send frame without CRC	Will not send
1	0	Send without pads, and add CRC	Send frame and add CRC	Will not send	Will not send
1	1	Send without pads and without CRC	Send frame without CRC	Send frame without CRC	Wiill not send

Notes: 8. If the TxPadDis bit is clear and InhibitCRC is set and the CS8900A is commanded to send a frame of length less than 60 bytes, the CS8900A pads.

9. The CS8900A will not send a frame with TxLength less than 3 bytes.

Table 35. Transmit Frame Length

6.0 TEST MODES

6.0.1 Loopback & Collision Diagnostic Tests

Internal and external Loopback and Collision tests can be used to verify the CS8900A's functionality when configured for either 10BASE-T or AUI operation.

6.0.2 Internal Tests

Internal tests allow the major digital functions to be tested, independent of the analog functions. During these tests, the Manchester encoder is connected to the decoder. All digital circuits are operational, and the transmitter and receiver are disabled.

6.0.3 External Tests

External test modes allow the complete chip to be tested without connecting it directly to an Ethernet network.

6.0.4 Loopback Tests

During Loopback tests, the internal Carrier Sense (CRS) signal, used to detect collisions, is ignored, allowing packet reception during packet transmission.

6.0.5 10BASE-T Loopback and Collision Tests

10BASE-T Loopback and Collision Tests are controlled by two bits in the Test Control register: FDX (Register 19, TestCTL, Bit E) and ENDECloop (Register 19, TestCTL, Bit 9). Table 36 describes these tests.

6.0.6 AUI Loopback and Collision Tests

AUI Loopback and Collision tests are controlled by two bits in the Test Control register: AUIloop (Register 19, TestCTL, Bit A) and ENDECloop (Register 19, TestCTL, Bit 9). Table 37 describes these tests.

Test Mode	FDX	ENDECloop	Description of Test
10BASE-T Internal Loopback	1	1	Transmit a frame and verify that the frame is received without error.
10BASE-T Internal Collision	0	1	Transmit frames and verify that collisions are detected and that the internal counters function properly. After 16 collisions, verify that 16coll (Register 8, TxEvent, Bit F) is set.
10BASE-T External Loopback	1	0	Connect TXD+ to RXD+ and TXD- to RXD-. Transmit a frame and verify that the frame is received without error.
10BASE-T External Collision	0	0	Connect TXD+ to RXD+ and TXD- to RXD-. Transmit frames and verify that collisions are detected and that internal counters function properly. After 16 collisions, verify that 16coll (Register 8, TxEvent, Bit F) is set.

Table 36. 10BASE-T Loopback and Collision Tests

Test Mode	AUIloop	ENDECloop	Description of Test
AUI Internal Loopback	1	1	Transmit a frame and verify that the frame is received without error.
AUI External Loopback	1	0	Connect DO+ to DI+ and DO- to DI-. Transmit a frame and verify that the frame is received without error (since there is no collision signal, an SQE error will occur).
AUI Collision	0	0	Start transmission and observe DO+/DO- activity. Input a 10 MHz sine wave to CI+/CI- pins and observe collisions.

Table 37. AUI Loopback and Collision Tests

6.1 Boundary Scan

Boundary Scan test mode provides an easy and efficient board-level test for verifying that the CS8900A has been installed properly. Boundary Scan will check to see if the orientation of the chip is correct, and if there are any open or short circuits.

Boundary Scan is controlled by the $\overline{\text{TEST}}$ pin. When $\overline{\text{TEST}}$ is high, the CS8900A is configured for normal operation. When $\overline{\text{TEST}}$ is low, the following occurs:

- the CS8900A enters Boundary Scan test mode and stays in this mode as long as $\overline{\text{TEST}}$ is low;
- the CS8900A goes through an internal reset and remains in internal reset as long as $\overline{\text{TEST}}$ is low;
- the AEN pin, normally the ISA bus Address Enable, is redefined to become the Boundary Scan shift clock input; and
- all digital outputs and bi-directional pins are placed in a high-impedance state (this electrically isolates the CS8900A digital outputs from the rest of the circuit board).

For Boundary Scan to be enabled, AEN must be low before $\overline{\text{TEST}}$ is driven low.

A complete Boundary Scan test is made up of two separate cycles. The first cycle, known as the Output Cycle, tests all digital output pins and all bi-directional pins. The second cycle, known as the Input Cycle, tests all digital input pins and all bi-directional pins.

6.1.1 Output Cycle

During the Output Cycle, the falling edge of AEN causes each of the 17 digital output pins and each of the 17 bi-directional pins to be driven low, one at a time. The cycle begins with $\overline{\text{LINKLED}}$ and advances in order counterclockwise around the chip through all 34 pins. This test is referred to as a "walking 0" test.

The following is a list of output pins and bi-directional pins that are tested during the Output Cycle:

Pin Name	Pin #	Pin Name	Pin #
ELCS	2	INTRQ1	31
EECS	3	INTRQ0	32
EESK	4	IOCS16	33
EEDataOut	5	MEMCS16	34
DMARQ2	11	INTRQ3	35
DMARQ1	13	IOCHRDY	64
DMARQ0	15	SD0 - SD7	65-68, 71-74
CSOUT	17	BSTATUS	78
SD08-SD15	27-24, 21-18	LINKLED	99
INTRQ2	30	LANLED	100

Table 38.

The output pins not included in this test are:

Pin Name	Pin #	Pin Name	Pin #
DO+	83	TXD-	88
DO-	84	RES	93
TXD+	87	XTAL2	98

Table 39.

6.1.2 Input Cycle

During the Input Cycle, the falling edge of AEN causes the state of each selected pin to be transferred to EEDataOut (that is, EEDataOut will be high or low depending on the input level of the selected pin). This cycle begins with $\overline{\text{SLEEP}}$ and advances clockwise through each of 33 input pins (all digital input pins except for AEN) and each of the 17 bi-directional pins, one pin at a time.

The following is a list of input pins and bi-directional pins that are tested during the Input Cycle:

Pin Name	Pin #	Pin Name	Pin #
ELCS	2	SBHE	36
EEDataIn	6	SA0 - SA11	37-48
CHIPSEL	7	REFRESH	49
DMACK2	12	SA12 - SA19	50-54, 58-60
DMACK1	14	IOR	61
DMACK0	16	IOW	62
SD08-SD15	27-24, 21-18	SD0 - SD7	65-68, 71-74
MEMW	28	RESET	75
MEMR	29	SLEEP	77

Table 40.

The input pins not included in this test are:

Pin Name	Pin #	Pin Name	Pin #
AEN	63	CI-	82
TEST	76	RXD+	91
DI+	79	RXD-	92
DI-	80	XTAL1	97
CI+	81		

Table 41.

After the Input Cycle is complete, one more cycle of AEN returns all digital output pins and bi-directional pins to a high-impedance state.

6.1.3 Continuity Cycle

The combination of a complete Output Cycle, a complete Input Cycle, and an additional AEN cycle is called a Continuity Cycle. Each Continuity Cycle lasts for 85 AEN clock cycles. The first Continuity Cycle can be followed by additional Continuity Cycles by keeping $\overline{\text{TEST}}$ low and continuing to cycle AEN. When $\overline{\text{TEST}}$ is driven high, the CS8900A exits Boundary Scan mode and AEN is again used as the ISA-bus Address Enable.

Figure 32 shows a complete Boundary Scan Continuity Cycle.

Figure 33 shows Boundary Scan timing.

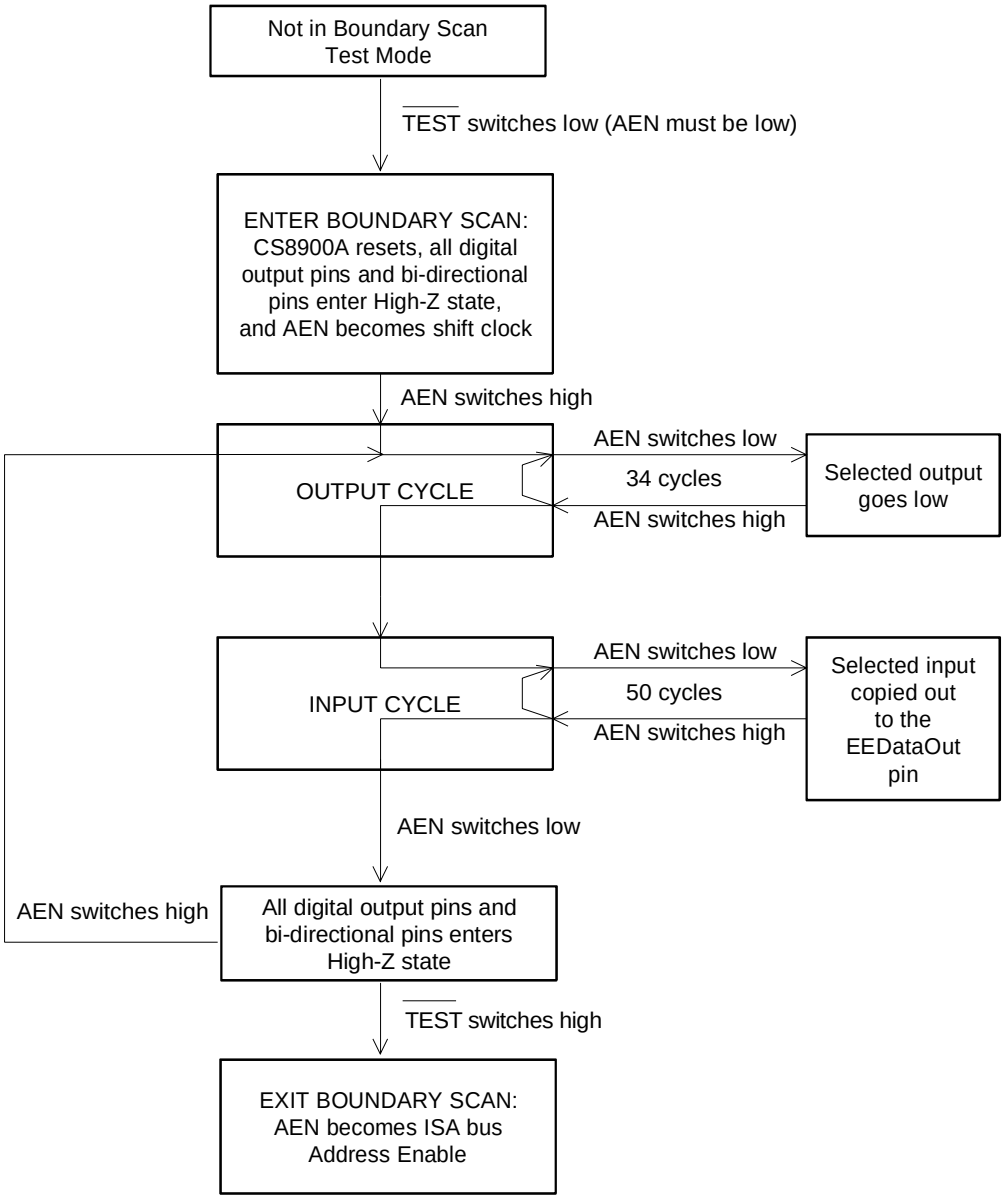

Figure 32. Boundary Scan Continuity Cycle

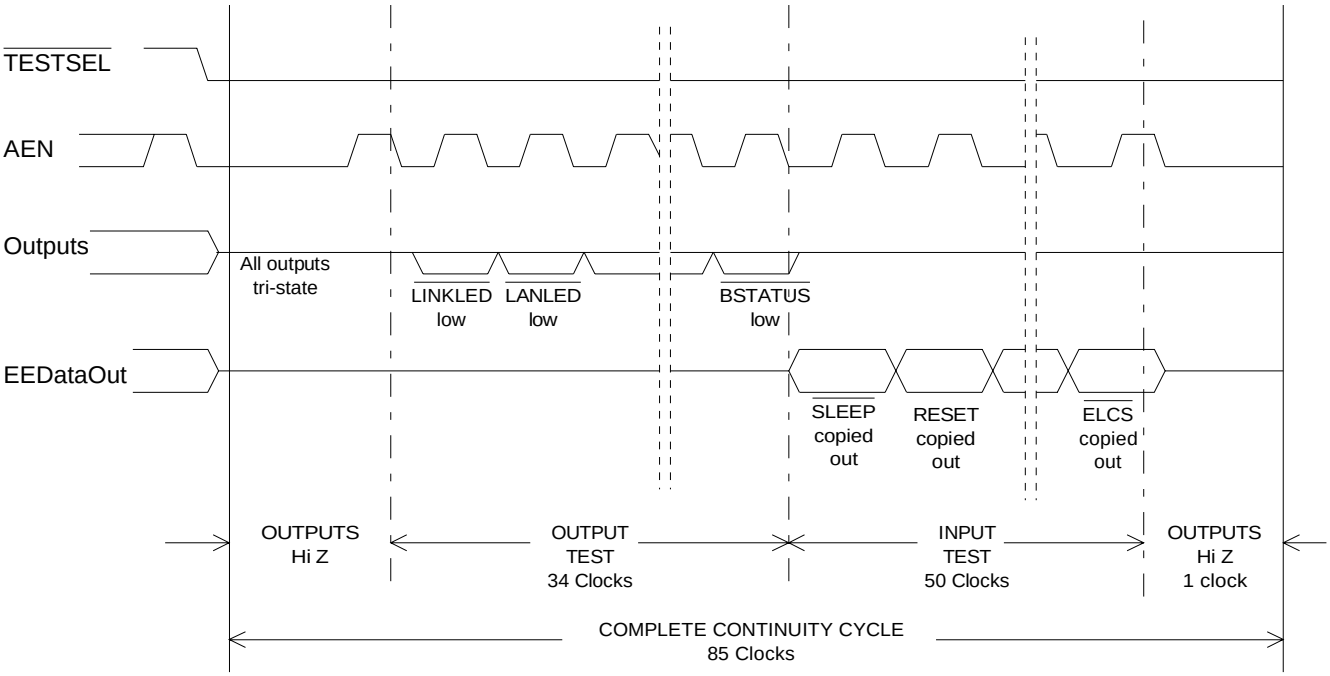

Figure 33. Boundary Scan Timing

7.0 CHARACTERISTICS/SPECIFICATIONS

7.1 ABSOLUTE MAXIMUM RATINGS (AVSS, DVSS = 0 V, all voltages with respect to 0 V.)

Parameter		Symbol	Min	Max	Unit
Power Supply	Digital Analog	$_DV_{DD}$ $_AV_{DD}$	-0.3 -0.3	6.0 6.0	V V
Input Current	(Except Supply Pins)		-	±10.0	mA
Analog Input Voltage			-0.3	$(_AV_{DD}+) + 0.3$	V
Digital Input Voltage			-0.3	$(_DV_{DD}) + 0.3$	V
Ambient Temperature	(Power Applied)		-55	+125	°C
Storage Temperature			-65	+150	°C

WARNING: Normal operation is not guaranteed at these extremes.

7.2 RECOMMENDED OPERATING CONDITIONS (AVSS, DVSS = 0 V, all voltages with respect to 0 V.)

Parameter		Symbol	Min	Max	Unit
5.0V Power Supply CS8900A-CQ & -IQ	Digital Analog	$_DV_{DD}$ $_AV_{DD}$	4.75 4.75	5.25 5.25	V V
3.3V Power Supply CS8900A-CQ3 & -IQ3	Digital Analog	$_DV_{DD}$ $_AV_{DD}$	3.135 3.135	3.465 3.465	V V
Operating Ambient Temperature CS8900A-CQ & -CQ3		T_A	0	+70	°C
Operating Ambient Temperature CS8900A-IQ & -IQ3		T_A	-40	+85	°C

7.3 DC CHARACTERISTICS (T_A = 25 °C; VDD = 5.0 V or VDD = 3.3V)

Parameter		Symbol	Min	Max	Unit
Crystal (when using external clock - square wave)					
XTAL1 Input Low Voltage		V_{IXH}	-0.5	0.4	V
XTAL1 Input High Voltage		V_{IXH}	3.5	$_DV_{DD}$ + 0.5	V
XTAL1 Input Low Current		I_{IXL}	-40	-	µA
XTAL1 Input High Current		I_{IXH}	-	40	µA
Power Supply					
Power Supply Current while Active 5.0V		I_{DD}	-	55	mA
Power Supply Current while Active 3.3V		I_{DD}	-	45	mA
Hardware Standby Mode Current	(Note 1)	$I_{DDSTNDBY}$	-	1.0	mA
Hardware Suspend Mode Current	(Note 1)	$I_{DDHWSUS}$	-	100	µA
Software Suspend Mode Current	(Note 1)	$I_{DDSWSUS}$	-	1.0	mA

Notes: 1. With digital outputs connected to CMOS loads.

DC CHARACTERISTICS (Continued)

Parameter			Symbol	Min	Typ	Max	Unit
Digital Inputs and Outputs		***(Note 2)***					
Output Low Voltage	I_{OL} = 24 mA	OD24, B24, O24ts	V_{OL}	-	-	0.4	V
	I_{OL} = 10 mA	OD10		-	-	0.4	V
	I_{OL} = 4 mA	B4w, O4		-	-	0.4	V
Output Low Voltage (all outputs) V_{DD} = 3.3V and T_A = >70°C			V_{OL}			0.425	V
Output High Voltage	I_{OH} = -12 mA	B24	V_{OH}	2.4	-	-	V
	I_{OH} = -2 mA	B4w, O24ts, O4		2.4	-	-	V
Output Leakage Current	$0 \le V_{OUT} \le V_{CC}$		I_{LL}				µA
		OD24, OD10, B24, O24ts		-10	-	10	
		B4w		-20	-	10	
Input Low Voltage		I, Iw	V_{IL}	-	-	0.8	V
Input High Voltage		I, Iw	V_{IH}	2.4	-	-	V
Input Leakage Current	$0 \le V_{IN} \le V_{CC}$		I_L				µA
		I		-10	-	10	
		Iw		-20	-	10	
10BASE-T Interface							
Transmitter Differential Output Voltage (Peak)			V_{OD}	2.2	-	2.8	V
Receiver Normal Squelch Level (Peak)			V_{ISQ}	300	-	525	mV
Receiver Low Squelch Level (LoRxSquelch bit set)			V_{SQL}	125	-	290	mV
AUI Interface							
Transmitter Differential Output Voltage (DO+/DO- Peak)			V_{AOD}	±0.45	-	±1.2	V
Transmitter Undershoot Voltage			V_{AODU}	-	-	100	mV
Transmitter Differential Idle Voltage (DO+/DO- Peak)			V_{IDLE}	-	-	40	mV
Receiver Squelch Level (DI+/DI- Peak)			V_{AISQ}	180	-	300	mV

Notes: 2. OD24: Open Drain Output with 24 mA Drive
OD10: Open Drain Output with 10 mA Drive
B24: Bi-Directional with 3-State Output and 24 mA Drive
B4w: Bi-Directional with 3-State Output, Internal Weak Pullup, and 4 mA Drive
O24ts: 3-State Output with 24 mA Drive
O4: Output with 4 mA Drive
I: Input
Iw: Input with Internal Weak Pullup

7.4 SWITCHING CHARACTERISTICS (T_A = 25 °C; V_{DD} = 5.0 V or VDD = 3.3V)

Parameter	Symbol	Min	Typ	Max	Unit
16-Bit I/O Read, IOCHRDY Not Used					
Address, AEN, $\overline{SBHE}$ active to $\overline{IOCS16}$ low	t_{IOR1}	-	-	35	ns
Address, AEN, $\overline{SBHE}$ active to $\overline{IOR}$ active	t_{IOR2}	10	-	-	ns
$\overline{IOR}$ low to SD valid	t_{IOR3}	-	-	135	ns
Address, AEN, $\overline{SBHE}$ hold after $\overline{IOR}$ inactive	t_{IOR4}	0	-	-	ns
$\overline{IOR}$ inactive to active	t_{IOR5}	35	-	-	ns
$\overline{IOR}$ inactive to SD 3-state	t_{IOR6}	-	30	-	ns
16-Bit I/O Read, With IOCHRDY					
$\overline{IOR}$ active to IORCHRDY inactive	t_{IOR7}	-	30	-	ns
IOCHRDY low pulse width	t_{IOR8}	125	-	175	ns
IOCHRDY active to SD valid	t_{IOR9}	-	-	0	ns

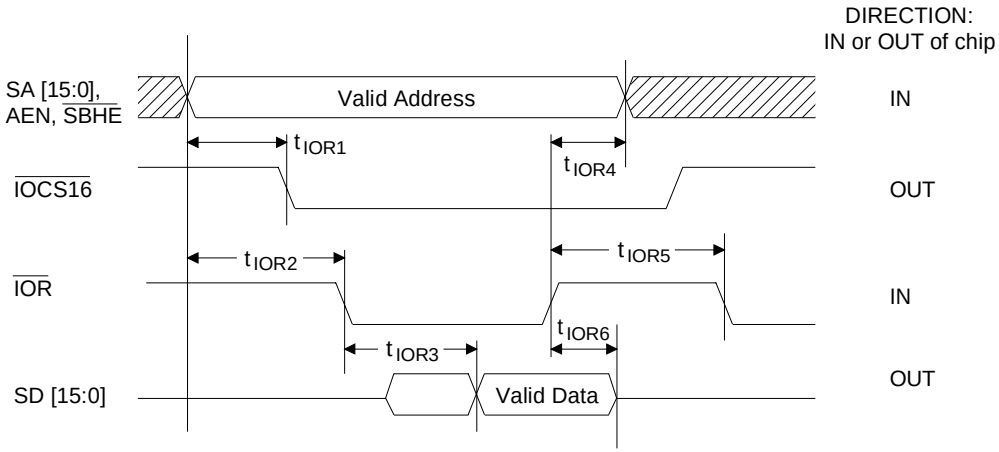

16-Bit I/O Read, IOCHRDY not used

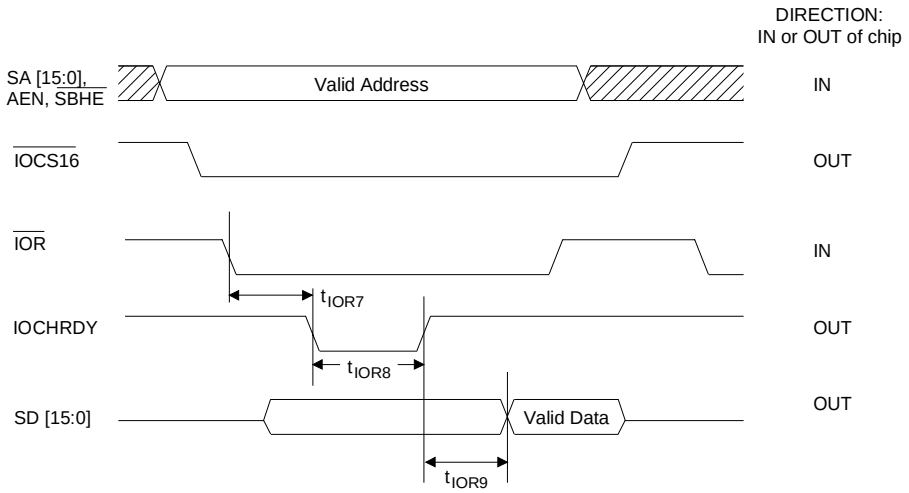

16-Bit I/O Read, with IOCHRDY

SWITCHING CHARACTERISTICS (Continued)

Parameter	Symbol	Min	Typ	Max	Unit
16-Bit Memory Read, IOCHRDY Not Used					
SA [19:0], $\overline{SBHE}$, $\overline{CHIPSEL}$, active to $\overline{MEMCS16}$ low	t_{MEMR1}	-	-	30	ns
Address, $\overline{SBHE}$, $\overline{CHIPSEL}$ active to $\overline{MEMR}$ active	t_{MEMR2}	10	-	-	ns
$\overline{MEMR}$ low to SD valid	t_{MEMR3}	-	-	135	ns
Address, $\overline{SBHE}$, $\overline{CHIPSEL}$ hold after $\overline{MEMR}$ inactive	t_{MEMR4}	0	-	-	ns
$\overline{MEMR}$ inactive to SD 3-state	t_{MEMR5}	-	30	-	ns
$\overline{MEMR}$ inactive to active	t_{MEMR6}	35	-	-	ns
16-Bit Memory Read, With IOCHRDY					
$\overline{MEMR}$ low to IOCHRDY inactive	t_{MEMR7}	-	35	-	ns
IOCHRDY low pulse width	t_{MEMR8}	125	-	175	ns
IOCHRDY active to SD valid	t_{MEMR9}	-	-	0	ns

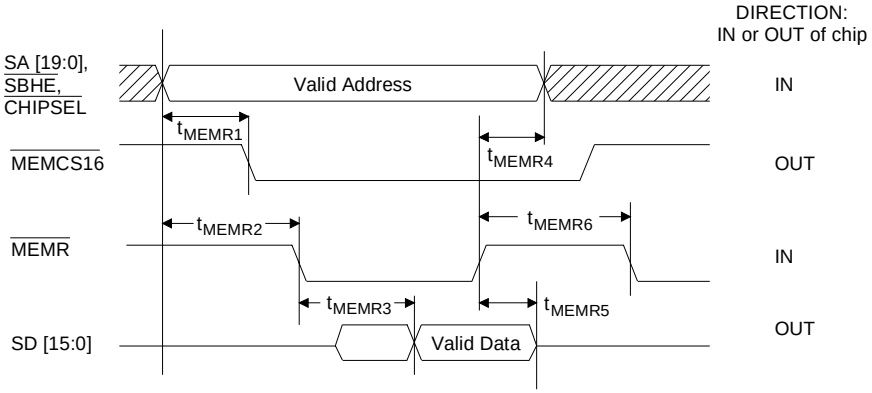

16-Bit Memory Read, IOCHRDY not used

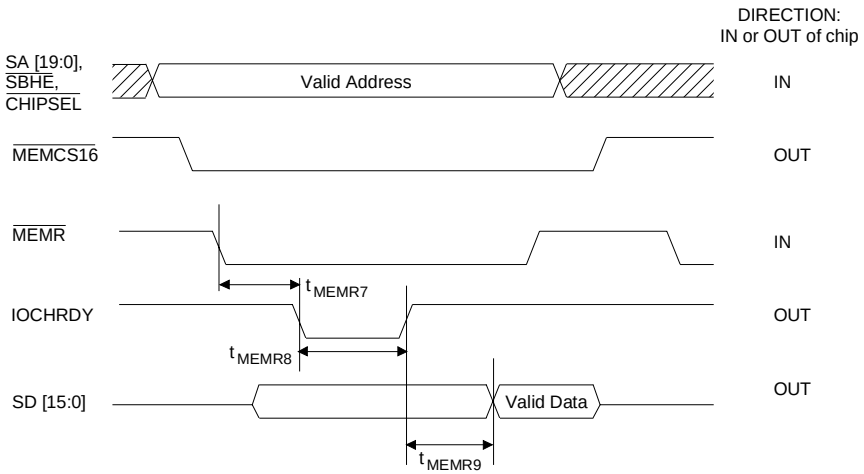

16-Bit Memory Read, with IOCHRDY

SWITCHING CHARACTERISTICS (Continued)

Parameter	Symbol	Min	Typ	Max	Unit
DMA Read					
DMACKx active to $\overline{IOR}$ active	t_{DMAR1}	60	-	-	ns
AEN active to $\overline{IOR}$ active	t_{DMAR2}	10	-	-	ns
$\overline{IOR}$ active to Data Valid	t_{DMAR3}	-	-	135	ns
$\overline{IOR}$ inactive to SD 3-state	t_{DMAR4}	-	30	-	ns
$\overline{IOR}$ n-1 high to DMARQx inactive	t_{DMAR5}	-	-	20	ns
$\overline{DMACKx}$, AEN hold after $\overline{IOR}$ high	t_{DMAR6}	20			ns
16-Bit I/O Write					
Address, AEN, $\overline{SBHE}$ valid to $\overline{IOCS16}$ low	t_{IOW1}	-	-	35	ns
Address, AEN, $\overline{SBHE}$ valid to $\overline{IOW}$ low	t_{IOW2}	20	-	-	ns
$\overline{IOW}$ pulse width	t_{IOW3}	110	-	-	ns
SD hold after $\overline{IOW}$ high	t_{IOW4}	0	-	-	ns
$\overline{IOW}$ low to SD valid	t_{IOW5}	-	-	10	ns
$\overline{IOW}$ inactive to active	t_{IOW6}	35	-	-	ns
Address hold after $\overline{IOW}$ high	t_{IOW7}	0	-	-	ns

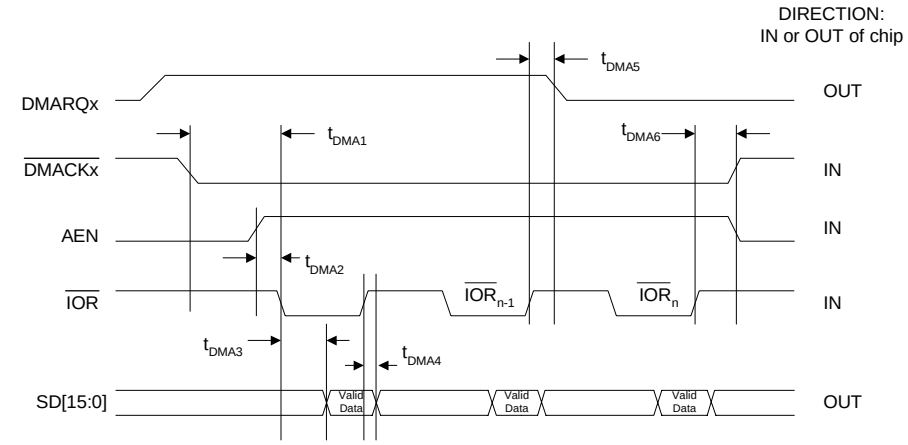

16-Bit DMA Read

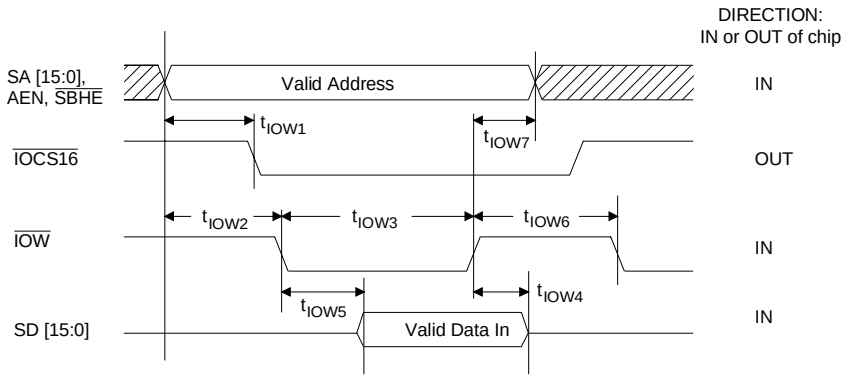

16-Bit I/O Write

SWITCHING CHARACTERISTICS (Continued)

Parameter	Symbol	Min	Typ	Max	Unit
16-Bit Memory Write					
Address, $\overline{SBHE}$, $\overline{CHIPSEL}$ valid to $\overline{MEMCS16}$ low	t_{MEMW1}	-	-	30	ns
Address, $\overline{SBHE}$, $\overline{CHIPSEL}$ valid to $\overline{MEMW}$ low	t_{MEMW2}	20	-	-	ns
$\overline{MEMW}$ pulse width	t_{MEMW3}	110	-	-	ns
$\overline{MEMW}$ low to SD valid	t_{MEMW4}	-	-	40	ns
SD hold after $\overline{MEMW}$ high	t_{MEMW5}	0	-	-	ns
Address hold after $\overline{MEMW}$ inactive	t_{MEMW6}	0	-	-	ns
$\overline{MEMW}$ inactive to active	t_{MEMW7}	35	-	-	ns
10BASE-T Transmit					
TXD Pair Jitter into 100 Ω Load	t_{TTX1}	-	-	8	ns
TXD Pair Return to ≤ 50 mV after Last Positive Transition	t_{TTX2}	-	-	4.5	µs
TXD Pair Positive Hold Time at End of Packet	t_{TTX3}	250	-	-	ns

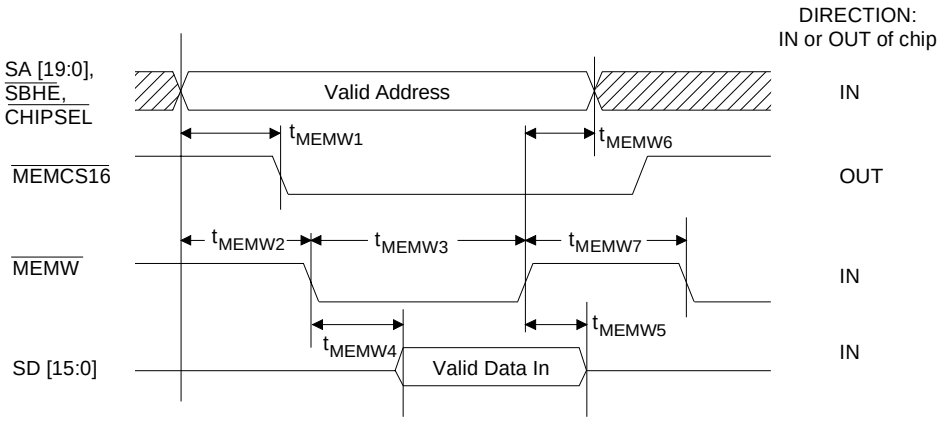

16-Bit Memory Write

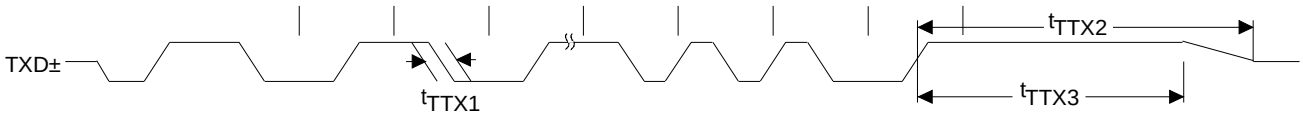

10BASE-T Transmit

SWITCHING CHARACTERISTICS (Continued)

Parameter	Symbol	Min	Typ	Max	Unit
10BASE-T Receive					
Allowable Received Jitter at Bit Cell Center	t_{TRX1}	-	-	±13.5	ns
Allowable Received Jitter at Bit Cell Boundary	t_{TRX2}	-	-	±13.5	ns
Carrier Sense Assertion Delay	t_{TRX3}	-	540	-	ns
Invalid Preamble Bits after Assertion of Carrier Sense	t_{TRX4}	1	-	2	bits
Carrier Sense Deassertion Delay	t_{TRX5}	-	270	-	ns
10BASE-T Link Integrity					
First Transmitted Link Pulse after Last Transmitted Packet	t_{LN1}	8	16	24	ms
Time Between Transmitted Link Pulses	t_{LN2}	8	16	24	ms
Width of Transmitted Link Pulses	t_{LN3}	60	100	200	ns
Minimum Received Link Pulse Separation	t_{LN4}	2	-	7	ms
Maximum Received Link Pulse Separation	t_{LN5}	25	-	150	ms
Last Receive Activity to Link Fail (Link Loss Timer)	t_{LN6}	50	-	150	ms

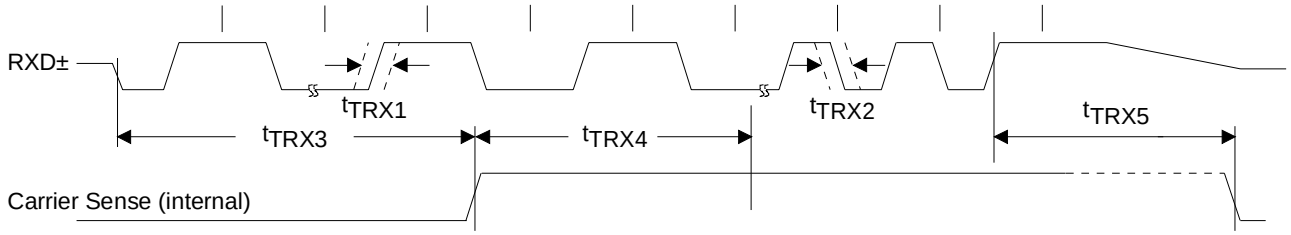

10BASE-T Receive

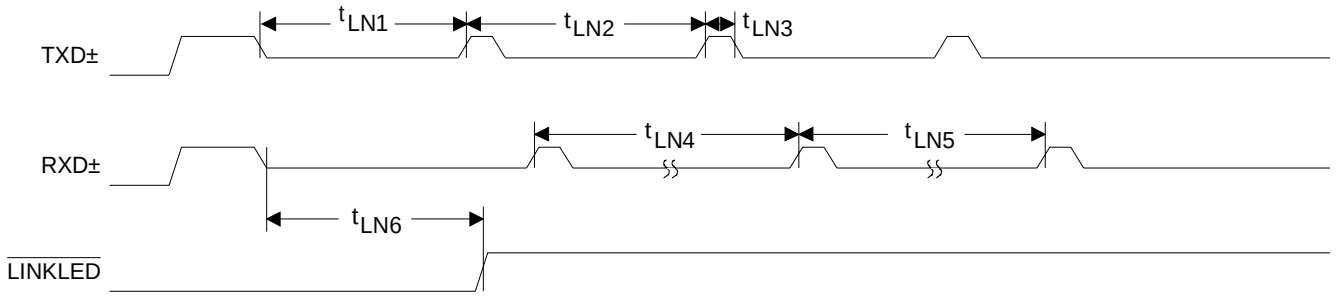

10BASE-T Link Integrity

SWITCHING CHARACTERISTICS (Continued)

Parameter	Symbol	Min	Typ	Max	Unit
AUI Transmit					
DO Pair Rise and Fall Times	t_{ATX1}	-	-	5	ns
DO Pair Jitter at Bit Cell Center	t_{ATX2}	-	-	0.5	ns
DO Pair Postitive Hold Time at Start of Idle	t_{ATX3}	200	-	-	ns
DO Pair Return to ≤ 40 mVp affter Last Positive Transition	t_{ATX4}	-	-	8.0	µs
AUI Receive					
DI Pair Rise and Fall Time	t_{ARX1}	-	-	10	ns
Allowable Bit Cell Center and Boundary Jitter in Data	t_{ARX2}	-	-	±18	ns
Carrier Sense Assertion Delay	t_{ARX3}	-	240	-	ns
Invalid Preamble Bits after Carrier Sense Asserts	t_{ARX4}	1	-	2	bits
Carrier Sense Deassertion Delay	t_{ARX5}	150	-	250	ns
AUI Collision					
CI Pair Cycle Time	t_{ACL1}	85	100	115	ns
CI Pair Rise and Fall Times	t_{ACL2}	-	-	10	ns
CI Pair Return to Zero from Last Positive Transition	t_{ACL3}	160	-	-	ns
Collision Assertion Delay	t_{ACL4}	50	-	200	ns
Collision Deassertion Delay	t_{ACL5}	150	-	300	ns

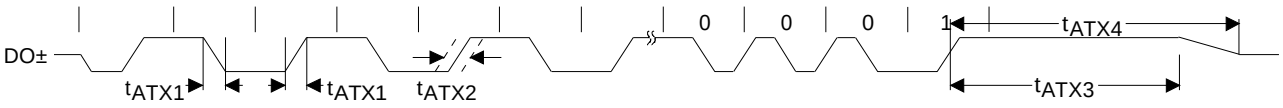

AUI Transmit

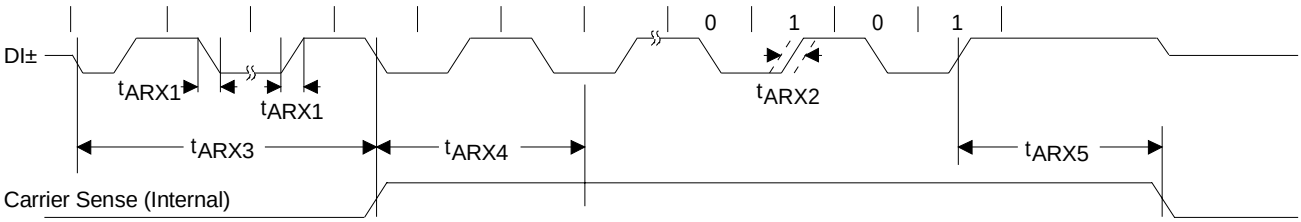

AUI Receive

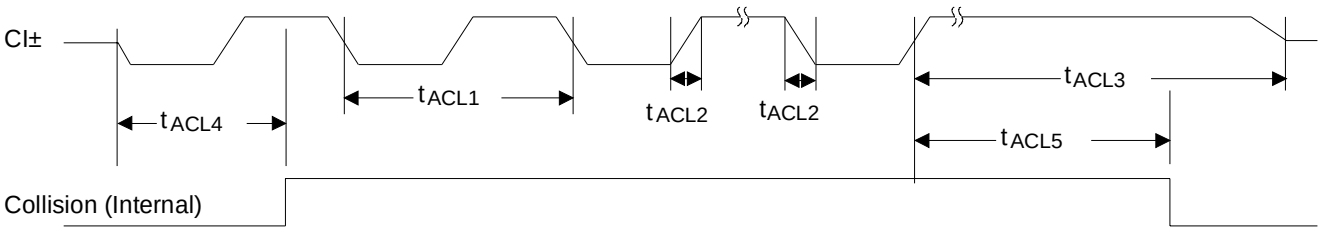

AUI Collision

SWITCHING CHARACTERISTICS (Continued)

Parameter	Symbol	Min	Typ	Max	Unit
External Boot PROM Access					
Address active to $\overline{\text{MEMR}}$	t_{BPROM1}	20	-	-	ns
$\overline{\text{MEMR}}$ active to $\overline{\text{CSOUT}}$ low	t_{BPROM2}	-	-	35	ns
$\overline{\text{MEMR}}$ inactive to $\overline{\text{CSOUT}}$ high	t_{BPROM3}	-	-	40	ns
EEPROM					
EESK Setup time relative to EECS	t_{SKS}	100	-	-	ns
EECS/$\overline{\text{ELCS}}$_b Setup time wrt ↑ EESK	t_{CCS}	250	-	-	ns
EEDataOut Setup time wrt ↑ EESK	t_{DIS}	250	-	-	ns
EEDataOut Hold time wrt ↑ EESK	t_{DIH}	500	-	-	ns
EEDataIn Hold time wrt ↑ EESK	t_{DH}	10	-	-	ns
EECS Hold time wrt ↓ EESK	t_{CSH}	100	-	-	ns
Min EECS Low time during programming	t_{CS}	1000	-	-	ns

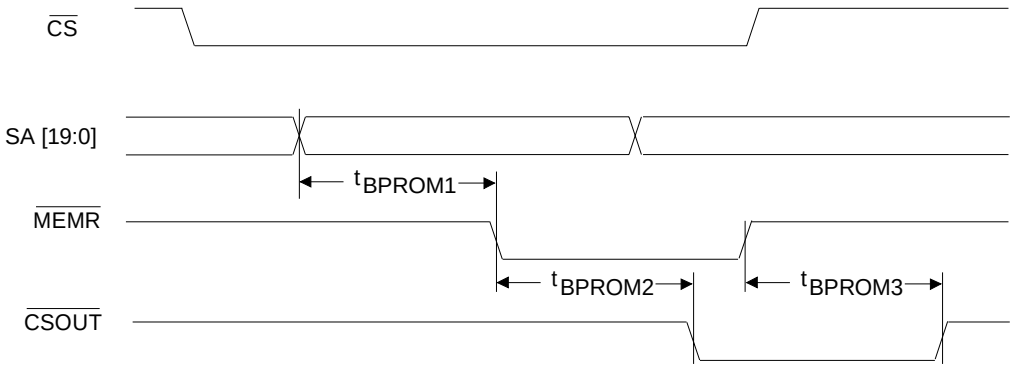

External Boot PROM Access

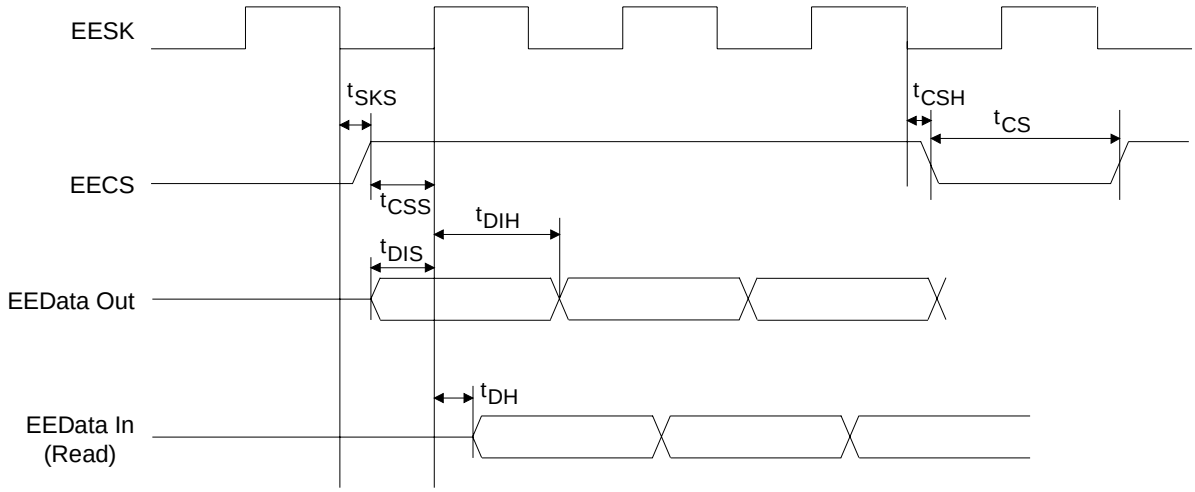

EEPROM

7.5 10BASE-T WIRING

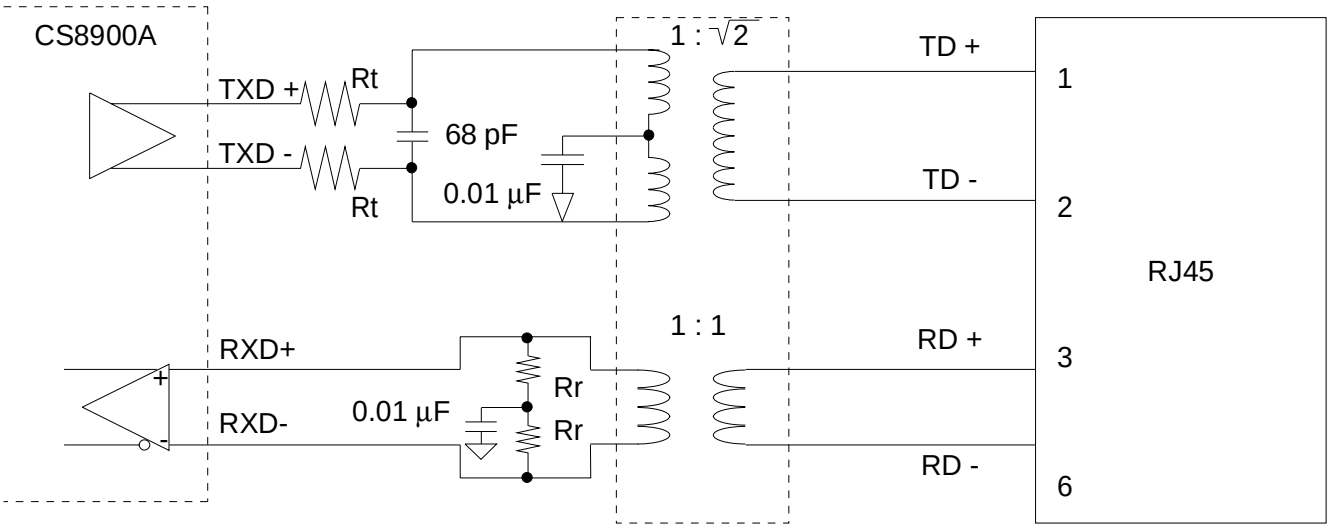

- If a center tap transformer is used on the RXD+ and RXD- inputs, replace the pair of Rr resistors with a single 2xRr resistor.
- The Rt and Rr resistors are ±1% tolerance.
- The CS8900A supports 100, 120, and 150 Ω unshielded twisted pair cables. The proper values of Rt and Rr, for a given cable impedence, are shown below:

Cable Impedance (Ω)	Rt (Ω)	Rr (Ω)
100	24.3	49.9
120	30.1	60.4
150	37.4	75

- Note: for 3.3V operation the turns ratio on TXD+ and TXD- is 1:2.5, rt is 8Ω for 100Ω cable and the 68pF cap changes to 560pF.

7.6 AUI WIRING

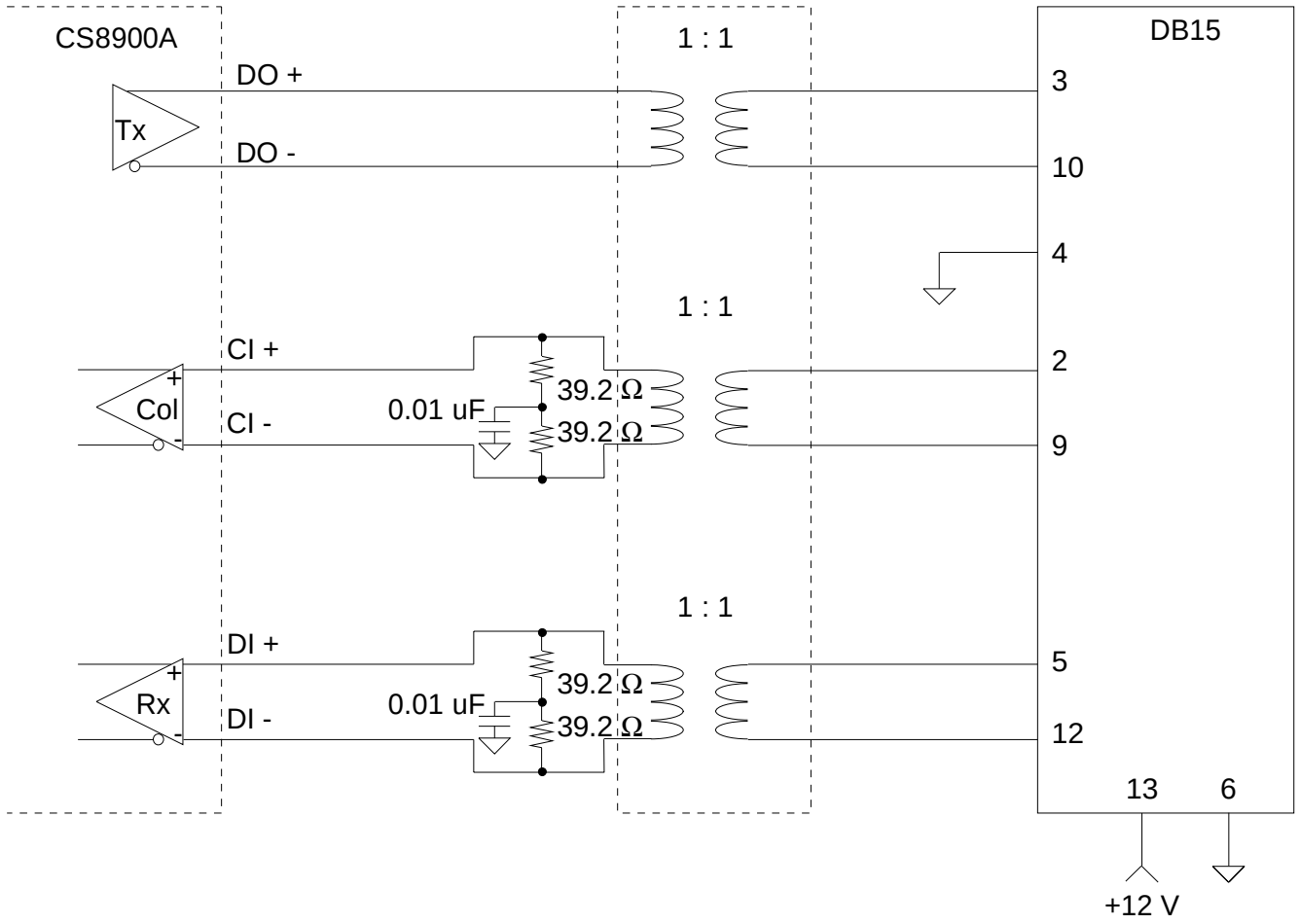

7.7 QUARTZ CRYSTAL REQUIREMENTS (If a 20 MHz quartz crystal is used, it must meet the following specifications)

Parameter	Min	Typ	Max	Unit
Parallel Resonant Frequency	-	20	-	MHz
Resonant Frequency Error (C_L = 18 pF)	-50	-	+50	ppm
Resonant Frequency Change Over Operating Temperature	-40	-	+40	ppm
Crystal Capacitance	-	-	18	pF
Motional Crystal Capacitance	-	0.022	-	pF
Series Resistance	-	-	50	Ohm
Shunt Capacitance	-	-	7	pF

8.0 PHYSICAL DIMENSIONS

100L TQFP PACKAGE DRAWING

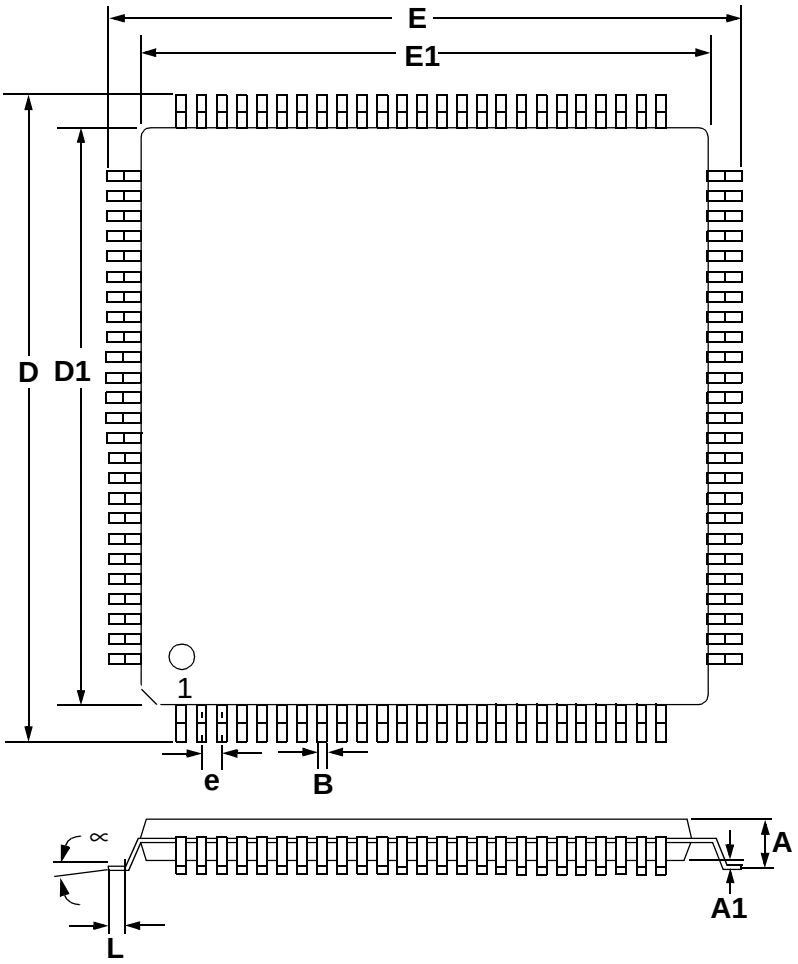

	INCHES		MILLIMETERS	
DIM	MIN	MAX	MIN	MAX
A	---	0.063	---	1.60
A1	0.002	0.006	0.05	0.15
B	0.007	0.011	0.17	0.27
D	0.618	0.642	15.70	16.30
D1	0.547	0.555	13.90	14.10
E	0.618	0.642	15.70	16.30
E1	0.547	0.555	13.90	14.10
e*	0.016	0.024	0.40	0.60
L	0.018	0.030	0.45	0.75
∝	0.000°	7.000°	0.00°	7.00°

* Nominal pin pitch is 0.50 mm

Controlling dimension is mm.
JEDEC Designation: MS026

9.0 GLOSSARY OF TERMS

9.1 Acronyms

AUI	Attachment Unit Interface
CRC	Cyclic Redundancy Check
CS	Carrier Sense
CSMA/CD	Carrier Sense Multiple Access with Collision Detection
DA	Destination Address
EEPROM	Electrically Erasable Programmable Read Only Memory
EOF	End-of-Frame
FCS	Frame Check Sequence
FDX	Full Duplex
IA	Individual Address
IPG	Inter-Packet Gap
ISA	Industry Standard Architecture
LA	ISA Latchable Address Bus (LA17 - LA23)
LLC	Logical Link Control
MAC	Media Access Control
MAU	Medium Attachment Unit
MIB	Management Information Base
RX	Receive
SA	Source Address *or* ISA System Address Bus (SA0 - SA19)
SFD	Start-of-Frame Delimiter
SNMP	Simple Network Management Protocol
SOF	Start-of-Frame
SQE	Signal Quality Error
TDR	Time Domain Reflectometer
TX	Transmit
UTP	Unshielded Twisted Pair

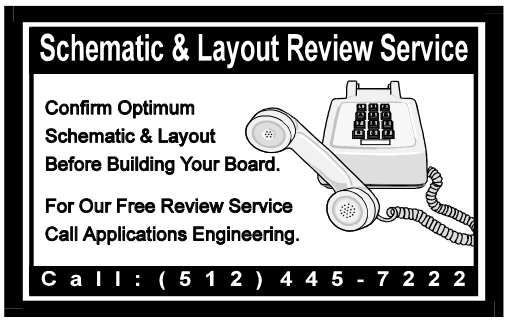

9.2 Definitions

Cyclic Redundancy Check

The method used to compute the 32-bit frame check sequence (FCS).

Frame Check Sequence

The 32-bit field at the end of a frame that contains the result of the cyclic redundancy check (CRC).

Frame

An Ethernet string of data bits that includes the Destination Address (DA), Source Address (SA), optional length field, Logical Link Control data (LLC data), pad bits (if needed) and Frame Check Sequence (FCS).

Individual Address

The specific Ethernet address assigned to a device attached to the Ethernet media.

Inter-Packet Gap

Time interval between packets on the Ethernet. Minimum interval is 9.6 ms.

Jabber

A condition that results when a Ethernet node transmits longer than between 20 ms and 150 ms.

Packet

An Ethernet string of data bits that includes the Preamble, Start-of-Frame Delimiter (SFD), Destination Address (DA), Source Address (SA), optional length field, Logical Link Control data (LLC data), pad bits (if needed) and Frame Check Sequence (FCS). A packet is a frame plus the Preamble and SFD.

Receive Collision

A receive collision occurs when the CI+/CI- inputs are active while a packet is being received. Applies only to the AUI.

Signal Quality Error

When transmitting on the AUI, the MAC expects to see a collision signal on the CI+/CI- pair within 64 bit times after the end of a transmission. If no collision occurs, there is said to be an "SQE error". Applies only to the AUI.

Slot Time

Time required for an Ethernet Frame to cross a maximum length Ethernet network. One Slot Time equals 512 bit times.

Transmit Collision

A transmit collision occurs when the receive inputs, RXD+/RXD- (10BASE-T) or CI+/CI- (AUI) are active while a packet is being transmitted.

9.3 Acronyms Specific to the CS8900A

BufCFG	Buffer Configuration - Register B
BufEvent	Buffer Event - Register C
BusCTL	Bus Control - Register 17
BusST	Bus State - Register 18
ENDEC	Manchester encoder/decoder
ISQ	Interrupt Status Queue - register 0
LineCTL	Ethernet Line Control - Register 13
LineST	Ethernet Line Status - Register 14
RxCFG	Receive Configuration - Register 3
RxCTL	Receive Control - Register 5
RxEvent	Receive Event - Register 4
SelfCTL	Self Control - Register 15
SelfST	Self Status - Register 16
TestCTL	Test Control - Register 19
TxCFG	Transmit Configuration - Register 7
TxCMD	Transmit Command - Register 9
TxEvent	Transmit Event - Register 8

9.4 Terms Specific to the CS8900A

Act-Once bit

A control bit that causes the CS8900A to take a certain action once when a logic "1" is written to that bit. To cause the action again, the host must rewrite a "1".

Committed Receive Frame

A receive frame is said to be "committed" after the frame has been buffered by the CS8900A, and the host has been notified, but the frame has not yet been transferred by the host.

Committed Transmit Frame

A transmit frame is said to be "committed" after the host has issued a Transmit Command, and the CS8900A has reserved buffer space and notified the host that it is ready for transmit.

Event or Interrupt Event

The term "Event" is used in this document to refer to something that can trigger an interrupt. Items that are considered "Events" are reported in the three Event registers (RxEvent, TxEvent, or BufEvent) and in two counter-overflow bits (RxMISS and TxCOL).

StreamTransfer

A method used to significantly reduce the number of interrupts to the host processor during block data transfers (Patent Pending).

PacketPage

A unified, highly-efficient method of controlling and getting status of a peripheral controller in I/O or Memory space.

Standby

A feature of the CS8900A used to conserve power. When in Standby mode, the CS8900A can be awakened either by 10BASE-T activity or host command.

Suspend

A feature of the CS8900A used to conserve power. When in Suspend mode, the CS8900A can be awakened only by host command.

Transfer

The term "transfer" refers to moving frame data across the ISA bus to or from the CS8900A.

Transmit Request

A Transmit Request is issued by the host to initiate the start of a new packet transmission. A Transmit Request consists of the following three steps in exactly the order shown:

1) The host writes a Transmit Command to the TxCMD register (PacketPage base + 0144h).
2) The host writes the transmit frame's length to the TxLength register (PacketPage base + 0146h).
3) The host reads BusST (Register 18) to see in the Rdy4TxNOW bit (Bit 8) is set.

9.5 Suffixes Specific to the CS8900A.

These terms have meaning only at the end of a term:

A	Accept
CMD	Command
CFG	Configure
CTL	Control
Dis	Disable
E	Enable
h	Indicates the number is hexadecimal
iE	Interrupt Enable
ST	Status

• Notes •



Preliminary product information describes products which are in production, but for which full characterization data is not yet available. Advance product information describes products which are in development and subject to development changes. Cirrus Logic, Inc. has made best efforts to ensure that the information contained in this document is accurate and reliable. However, the information is subject to change without notice and is provided "AS IS" without warranty of any kind (express or implied). No responsibility is assumed by Cirrus Logic, Inc. for the use of this information, nor for infringements of patents or other rights of third parties. This document is the property of Cirrus Logic, Inc. and implies no license under patents, copyrights, trademarks, or trade secrets. No part of this publication may be copied, reproduced, stored in a retrieval system, or transmitted, in any form or by any means (electronic, mechanical, photographic, or otherwise) without the prior written consent of Cirrus Logic, Inc. Items from any Cirrus Logic website or disk may be printed for use by the user. However, no part of the printout or electronic files may be copied, reproduced, stored in a retrieval system, or transmitted, in any form or by any means (electronic, mechanical, photographic, or otherwise) without the prior written consent of Cirrus Logic, Inc.Furthermore, no part of this publication may be used as a basis for manufacture or sale of any items without the prior written consent of Cirrus Logic, Inc. The names of products of Cirrus Logic, Inc. or other vendors and suppliers appearing in this document may be trademarks or service marks of their respective owners which may be registered in some jurisdictions. A list of Cirrus Logic, Inc. trademarks and service marks can be found at http://www.cirrus.com.