CIRRUS LOGIC®
Leading the Digital Entertainment Revolution™

CS8427

96 kHz Digital Audio Interface Transceiver

Features

- Complete EIAJ CP1201, IEC-60958, AES3, S/PDIF-compatible Transceiver
- +5.0 V Analog Supply (VA+)
- +3.3 V or +5.0 V Digital Interface (VL+)
- Flexible 3-wire Serial Digital I/O Ports
- Adjustable Sample Rate up to 96 kHz
- Low-jitter Clock Recovery
- Pin and Microcontroller Read/Write Access to Channel Status and User Data
- Microcontroller and Standalone Modes
- Differential Cable Driver and Receiver
- On-chip Channel Status and User Data Buffer Memories Permit Block Reads & Writes
- OMCK System Clock Mode
- Decodes Audio CD Q Sub-code

General Description

The CS8427 is a stereo digital audio transceiver with AES3 and serial digital audio inputs, AES3 and serial digital audio outputs, and includes comprehensive control ability through a 4-wire microcontroller port. Channel status and user data are assembled in block-sized buffers, making read/modify/write cycles easy.

A low-jitter clock recovery mechanism yields a very clean recovered clock from the incoming AES3 stream.

Target applications include A/V receivers, CD-R, DVD receivers, multimedia speakers, digital mixing consoles, effects processors, set-top boxes, and computer and automotive audio systems.

The CS8427 is available in 28-pin SOIC and TSSOP packages in Commercial (-10°C to +70°C) and Automotive (-40°C to +85°C) grades. The CDB8427 Customer Demonstration Board is also available for device evaluation and implementation suggestions. Please see "Ordering Information" on page 49 for complete details.

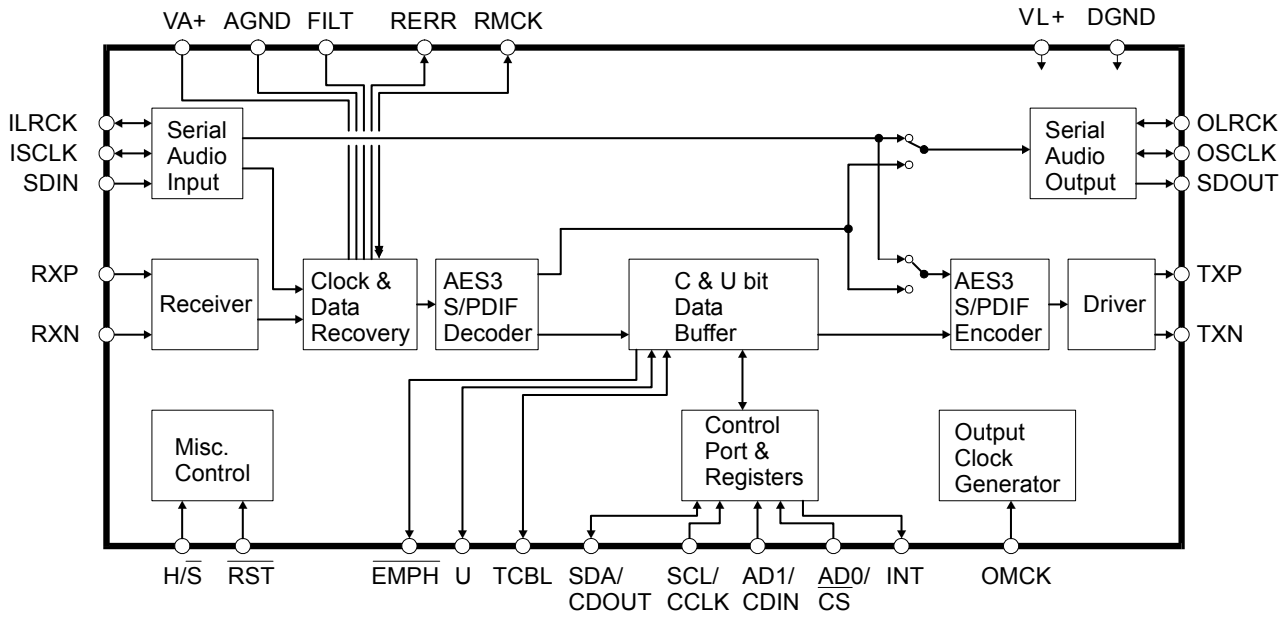

Copyright © Cirrus Logic, Inc. 2010
(All Rights Reserved)

TABLE OF CONTENTS

1. CHARACTERISTICS AND SPECIFICATIONS 5
SPECIFIED OPERATING CONDITIONS 5
ABSOLUTE MAXIMUM RATINGS 5
DC ELECTRICAL CHARACTERISTICS 6
DIGITAL INPUT CHARACTERISTICS 6
DIGITAL INTERFACE SPECIFICATIONS 6
TRANSMITTER CHARACTERISTICS 6
SWITCHING CHARACTERISTICS 7
SWITCHING CHARACTERISTICS - SERIAL AUDIO PORTS 8
SWITCHING CHARACTERISTICS - CONTROL PORT - SPI MODE 9
SWITCHING CHARACTERISTICS - CONTROL PORT - I²C MODE 10
2. TYPICAL CONNECTION DIAGRAM 11
3. GENERAL DESCRIPTION 12
3.1 Audio Input/Output Ports 12
3.2 Serial Control Port 12
3.3 Channel Status and User bit Memory 12
3.4 AES3 and S/PDIF Standards Documents 13
4. DATA I/O FLOW AND CLOCKING OPTIONS 13
5. THREE-WIRE SERIAL AUDIO PORTS 15
6. AES3 RECEIVER 16
6.1 OMCK System Clock Mode 16
6.2 PLL, Jitter Attenuation, and Varispeed 16
6.3 Error Reporting and Hold Function 16
6.4 Channel Status Data Handling 16
6.5 User Data Handling 17
6.6 Non-Audio Auto Detection 17
7. AES3 TRANSMITTER 18
7.1 Transmitted Frame and Channel Status Boundary Timing 18
7.2 TXN and TXP Drivers 18
8. MONO MODE OPERATION 19
8.1 Receiver Mono Mode 19
8.2 Transmitter Mono Mode 19
9. CONTROL PORT DESCRIPTION AND TIMING 25
9.1 SPITM Mode 25
9.2 I²C Mode 25
9.3 Interrupts 25
10. CONTROL PORT REGISTER SUMMARY 27
10.1 Memory Address Pointer (MAP) 27
11. CONTROL PORT REGISTER BIT DEFINITIONS 28
11.1 Control 1 (01h) 28
11.2 Control 2 (02h) 28
11.3 Data Flow Control (03h) 29
11.4 Clock Source Control (04h) 30
11.5 Serial Audio Input Port Data Format (05h) 31
11.6 Serial Audio Output Port Data Format (06h) 31
11.7 Interrupt 1 Status (07h) (Read Only) 32
11.8 Interrupt 2 Status (08h) (Read Only) 33
11.9 Interrupt 1 Mask (09h) 33
11.10 Interrupt 1 Mode MSB (0Ah) & Interrupt 1 Mode LSB (0Bh) 33
11.11 Interrupt 2 Mask (0Ch) 34
11.12 Interrupt 2 Mode MSB (0Dh) & Interrupt 2 Mode LSB (0Eh) 34
11.13 Receiver Channel Status (0Fh) (Read Only) 34

11.14 Receiver Error (10h) (Read Only) 35
11.15 Receiver Error Mask (11h) 36
11.16 Channel Status Data Buffer Control (12h) 36
11.17 User Data Buffer Control (13h) 37
11.18 Q-Channel Subcode Bytes 0 to 9 (14h - 1Dh) (Read Only) 37
11.19 OMCK/RMCK Ratio (1Eh) (Read Only) 38
11.20 C-bit or U-bit Data Buffer (20h - 37h) 38
11.21 CS8427 I.D. and Version Register (7Fh) (Read Only) 38
12. PIN DESCRIPTION - SOFTWARE MODE 39
13. HARDWARE MODE DESCRIPTION 42
13.1 Serial Audio Port Formats 42
14. PIN DESCRIPTION - HARDWARE MODE 44
15. APPLICATIONS 46
15.1 Reset, Power Down and Start-up 46
15.2 ID Code and Revision Code 46
15.3 Power Supply, Grounding, and PCB layout 46
15.4 Synchronization of Multiple CS8427s 46
16. PACKAGE DIMENSIONS 47
17. ORDERING INFORMATION 49
18. APPENDIX A: EXTERNAL AES3/SPDIF/IEC60958 TRANSMITTER AND RECEIVER COMPONENTS 50
18.1 AES3 Transmitter External Components 50
18.2 Isolating Transformer Requirements 50
18.3 AES3 Receiver External Components 51
18.4 Isolating Transformer Requirements 51
19. APPENDIX B: CHANNEL STATUS AND USER DATA BUFFER MANAGEMENT 52
19.1 AES3 Channel Status(C) Bit Management 52
19.1.1 Manually accessing the E buffer 52
19.1.2 Reserving the first 5 bytes in the E buffer 53
19.1.3 Serial Copy Management System (SCMS) 53
19.1.4 Channel Status Data E Buffer Access 53
19.2 AES3 User (U) Bit Management 54
19.2.1 Mode 1: Transmit All Zeros 54
19.2.2 Mode 2: Block Mode 54
20. APPENDIX C: PLL FILTER 55
20.1 General 55
20.2 External Filter Components 56
20.2.1 General 56
20.2.2 Capacitor Selection 56
20.2.3 Circuit Board Layout 56
20.3 Component Value Selection 57
20.3.1 Identifying the Part Revision 57
20.3.2 Locking to the RXP/RXN Receiver Inputs 57
20.3.3 Locking to the ILRCK Input 58
20.3.4 Jitter Tolerance 58
20.3.5 Jitter Attenuation 59
21. REVISION HISTORY 60

LIST OF FIGURES

Figure 1. Audio Port Master Mode Timing 8
Figure 2. Audio Port Slave Mode and Data Input Timing 8
Figure 3. SPI Mode timing 9
Figure 4. I²C Mode timing 10
Figure 5. Recommended Connection Diagram for Software Mode 11
Figure 6. CS8427 Internal Block Diagram 13
Figure 7. Software Mode Audio Data Flow Switching Options 19
Figure 8. CS8427 Clock Routing 20
Figure 9. AES3 Input to Serial Audio Output, Serial Audio Input to AES3 Out 21
Figure 11. Input Serial Port to AES3 Transmitter without PLL 21
Figure 10. AES3 Input to Serial Audio Output Only 21
Figure 12. Input Serial Port to AES3 Transmitter with PLL 21
Figure 13. AES3 Receiver Timing for U pin output data 22
Figure 14. AES3 Transmitter Timing for C, U and V pin input data 22
Figure 15. Serial Audio Input Example Formats 23
Figure 16. Serial Audio Output Example Formats 24
Figure 17. Control Port Timing in SPI Mode 26
Figure 18. Control Port Timing in I²C Mode 26
Figure 19. Hardware Mode 42
Figure 20. Professional Output Circuit 50
Figure 21. Consumer Output Circuit 50
Figure 22. TTL/CMOS Output Circuit 50
Figure 23. Professional Input Circuit 51
Figure 24. Transformerless Professional Input Circuit 51
Figure 25. Consumer Input Circuit 51
Figure 26. TTL/CMOS Input Circuit 51
Figure 27. Channel Status Data Buffer Structure 52
Figure 28. Flowchart for Reading the E Buffer 53
Figure 29. Flowchart for Writing the E Buffer 53
Figure 30. PLL Block Diagram 55
Figure 31. Recommended Layout Example 56
Figure 32. Jitter Tolerance Template 58
Figure 33. Revision A 59
Figure 34. Revision A1 59
Figure 35. Revision A2 using A1 values 59
Figure 36. Revision A2 using A2* values 59

LIST OF TABLES

Table 1. Control Register Map Summary 27
Table 2. Hardware Mode Start-up Options 43
Table 3. Serial Audio Output Formats Available in Hardware Mode 43
Table 4. Serial Audio Input Formats Available in Hardware Mode 43
Table 5. Second Line Part Marking 57
Table 6. Locking to RXP/RXN - Fs = 8 to 96 kHz 57
Table 7. Locking to RXP/RXN - Fs = 32 to 96 kHz 57
Table 8. Locking to the ILRCK Input 58
Table 9. Revision History 60

1. CHARACTERISTICS AND SPECIFICATIONS

All Min/Max characteristics and specifications are guaranteed over the Specified Operating Conditions. Typical performance characteristics and specifications are derived from measurements taken at nominal supply voltages and T_A = 25°C.

SPECIFIED OPERATING CONDITIONS

AGND, DGND = 0 V, all voltages with respect to 0 V.

Parameter		Symbol	Min	Typ	Max	Units
Power Supply Voltage	(Note 1)	VA+ VL+	4.5 2.85	5.0 3.3 or 5.0	5.5 5.5	V V
Ambient Operating Temperature:	'-CS', 'CSZ' & '-CZ' '-DS' & '-DZ'	T_A	-10 -40	- -	+70 +85	°C

Notes: 1. I²C protocol is supported only in VL+ = 5.0 V mode.

ABSOLUTE MAXIMUM RATINGS

AGND, DGND = 0 V; all voltages with respect to 0 V. Operation beyond these limits may result in permanent damage to the device. Normal operation is not guaranteed at these extremes.

Parameter		Symbol	Min	Max	Units
Power Supply Voltage		VL+,VA+	-	6.0	V
Input Current, Any Pin Except Supplies	(Note 2)	I_{in}	-	±10	mA
Input Voltage		V_{in}	-0.3	(VL+) + 0.3	V
Ambient Operating Temperature (power applied)		T_A	-55	125	°C
Storage Temperature		T_{stg}	-65	150	°C

Notes: 2. Transient currents of up to 100 mA will not cause SCR latch-up.

DC ELECTRICAL CHARACTERISTICS

AGND = DGND = 0 V; all voltages with respect to 0 V.

Parameters		Symbol	Min	Typ	Max	Units
Power-down Mode (Note 3)						
Supply Current in power down	VA+		-	20	-	µA
	VL+ = 3.3 V		-	60	-	µA
	VL+ = 5.0 V		-	60	-	µA
Normal Operation (Note 4)						
Supply Current at 48 kHz frame rate	VA+		-	6.3	-	mA
	VL+ = 3.3 V		-	30.1	-	mA
	VL+ = 5.0 V		-	46.5	-	mA
Supply Current at 96 kHz frame rate	VA+		-	6.6	-	mA
	VL+ = 3.3 V		-	44.8	-	mA
	VL+ = 5.0 V		-	76.6	-	mA

Notes: 3. Power Down Mode is defined as $\overline{RST}$ = LO with all clocks and data lines held static.

4. Normal operation is defined as $\overline{RST}$ = HI.

DIGITAL INPUT CHARACTERISTICS

Parameters	Symbol	Min	Typ	Max	Units
Input Leakage Current	I_{in}	-	±1	±10	µA
Differential Input Voltage, RXP0 to RXN	V_{TH}	-	200	-	mV

DIGITAL INTERFACE SPECIFICATIONS

AGND = DGND = 0 V; all voltages with respect to 0 V.

Parameters		Symbol	Min	Max	Units
High-Level Output Voltage (I_{OH} = -3.2 mA), except TXP/TXN		V_{OH}	(VL+) - 1.0	-	V
Low-Level Output Voltage (I_{OH} = 3.2 mA), except TXP/TXN		V_{OL}	-	0.4	V
High-Level Output Voltage, TXP, TXN	(23 mA at VL+ = 5.0 V)		(VL+) - 0.7	-	V
	(15.2 mA at VL+ = 3.3 V)		(VL+) - 0.7	-	V
Low-Level Output Voltage, TXP, TXN	(23 mA at VL+ = 5.0 V)		-	0.7	V
	(15.2 mA at VL+ = 3.3 V)		-	0.7	V
High-Level Input Voltage, except RXP, RXN		V_{IH}	2.0	(VL+) + 0.3	V
Low-Level Input Voltage, except RXP, RXN	(Note 5)	V_{IL}	-0.3	0.4/0.8	V

Notes: 5. At 5.0 V mode, V_{IL} = 0.8 V (Max), at 3.3 V mode, V_{IL} =0.4 V (Max).

TRANSMITTER CHARACTERISTICS

Parameters		Symbol	Min	Typ	Max	Units
TXP Output Resistance	VL+ = 5.0 V	R_{TXP}	-	26	-	Ω
	VL+ = 3.3 V		-	40	-	Ω
TXN Output Resistance	VL+ = 5.0 V	R_{TXN}	-	26	-	Ω
	VL+ = 3.3 V		-	40	-	Ω

SWITCHING CHARACTERISTICS

Inputs: Logic 0 = 0 V, Logic 1 = VL+; C_L = 20 pF.

Parameter	Symbol	Min	Typ	Max	Units
RST pin Low Pulse Width		200	-	-	µs
OMCK Frequency for OMCK = 512 * Fso		4.1	-	55.3	MHz
OMCK Low and High Width for OMCK = 512 * Fso		7.2	-	-	ns
OMCK Frequency for OMCK = 384 * Fso		3.1	-	41.5	MHz
OMCK Low and High Width for OMCK = 384 * Fso		10.8	-	-	ns
OMCK Frequency for OMCK = 256 * Fso		2.0	-	27.7	MHz
OMCK Low and High Width for OMCK = 256 * Fso		14.4	-	-	ns
PLL Clock Recovery Sample Rate Range		8.0	-	108.0	kHz
RMCK output jitter (Note 6)		-	200	-	ps RMS
RMCK output duty cycle		40	50	60	%
RMCK Input Frequency (Note 7)		1.8	-	27.7	MHz
RMCK Input Low and High Width (Note 7)		14.4	-	-	ns
AES3 Transmitter Output Jitter		-	-	1	ns

Notes: 6. Cycle-to-cycle locking to RXP/RXN using 32 to 96 kHz external PLL filter components.

7. PLL is bypassed (RXD1:0 bits in the Clock Source Control register set to 10b), clock is input to the RMCK pin.

SWITCHING CHARACTERISTICS - SERIAL AUDIO PORTS

Inputs: Logic 0 = 0 V, Logic 1 = VL+; C_L = 20 pF.

Parameter		Symbol	Min	Typ	Max	Units
OSCLK Active Edge to SDOUT Output Valid	(Note 8)	t_{dpd}	-	-	20	ns
SDIN Setup Time Before ISCLK Active Edge	(Note 8)	t_{ds}	20	-	-	ns
SDIN Hold Time After ISCLK Active Edge	(Note 8)	t_{dh}	20	-	-	ns
Master Mode						
O/RMCK to I/OSCLK active edge delay	(Note 8, 9)	t_{smd}	0	-	10	ns
O/RMCK to I/OLRCK delay	(Note 10)	t_{lmd}	0	-	10	ns
I/OSCLK and I/OLRCK Duty Cycle			-	50	-	%
Slave Mode						
I/OSCLK Period	(Note 11)	t_{sckw}	36	-	-	ns
I/OSCLK Input Low Width		t_{sckl}	14	-	-	ns
I/OSCLK Input High Width		t_{sckh}	14	-	-	ns
I/OSCLK Active Edge to I/OLRCK Edge	(Note 8, 10, 12)	t_{lrckd}	20	-	-	ns
I/OLRCK Edge Setup Before I/OSCLK Active Edge	(Note 8, 10, 13)	t_{lrcks}	20	-	-	ns

Notes:
8. The active edges of ISCLK and OSCLK are programmable.
9. When OSCLK, OLRCK, ISCLK, and ILRCK are derived from OMCK they are clocked from its rising edge. When these signals are derived from RMCK, they are clocked from its falling edge.
10. The polarity of ILRCK and OLRCK is programmable.
11. No more than 128 SCLK per frame.
12. This delay is to prevent the previous I/OSCLK edge from being interpreted as the first one after I/OLRCK has changed.
13. This setup time ensures that this I/OSCLK edge is interpreted as the first one after I/OLRCK has changed.

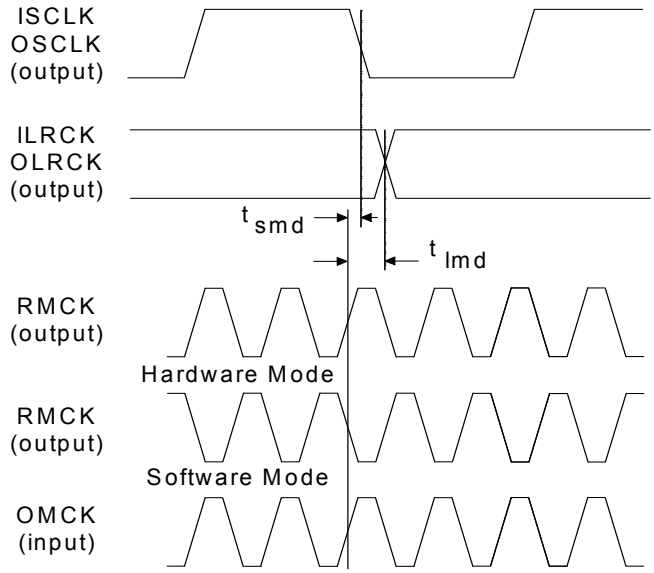

Figure 1. Audio Port Master Mode Timing

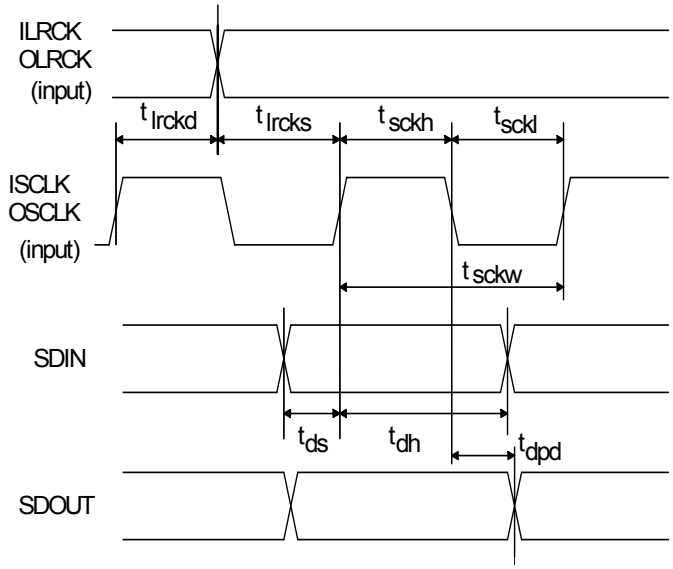

Figure 2. Audio Port Slave Mode and Data Input Timing

SWITCHING CHARACTERISTICS - CONTROL PORT - SPI MODE

Inputs: Logic 0 = 0 V, Logic 1 = VL+; C_L = 20 pF.

Parameter		Symbol	Min	Typ	Max	Units
CCLK Clock Frequency	(Note 14)	f_{sck}	0	-	6.0	MHz
$\overline{CS}$ High Time Between Transmissions		t_{csh}	1.0	-	-	µs
$\overline{CS}$ Falling to CCLK Edge		t_{css}	20	-	-	ns
CCLK Low Time		t_{scl}	66	-	-	ns
CCLK High Time		t_{sch}	66	-	-	ns
CDIN to CCLK Rising Setup Time		t_{dsu}	40	-	-	ns
CCLK Rising to DATA Hold Time	(Note 15)	t_{dh}	15	-	-	ns
CCLK Falling to CDOUT Stable		t_{pd}	-	-	50	ns
Rise Time of CDOUT		t_{r1}	-	-	25	ns
Fall Time of CDOUT		t_{f1}	-	-	25	ns
Rise Time of CCLK and CDIN	(Note 16)	t_{r2}	-	-	100	ns
Fall Time of CCLK and CDIN	(Note 16)	t_{f2}	-	-	100	ns

Notes: 14. If Fso or Fsi is lower than 46.875 kHz, the maximum CCLK frequency should be less than 128 Fso and less than 128 Fsi. This is dictated by the timing requirements necessary to access the Channel Status and User Bit buffer memory. Access to the control register file can be carried out at the full 6 MHz rate. The minimum allowable input sample rate is 8 kHz, so choosing CCLK to be less than or equal to 1.024 MHz should be safe for all possible conditions.

15. Data must be held for sufficient time to bridge the transition time of CCLK.

16. For f_{sck} < 1 MHz.

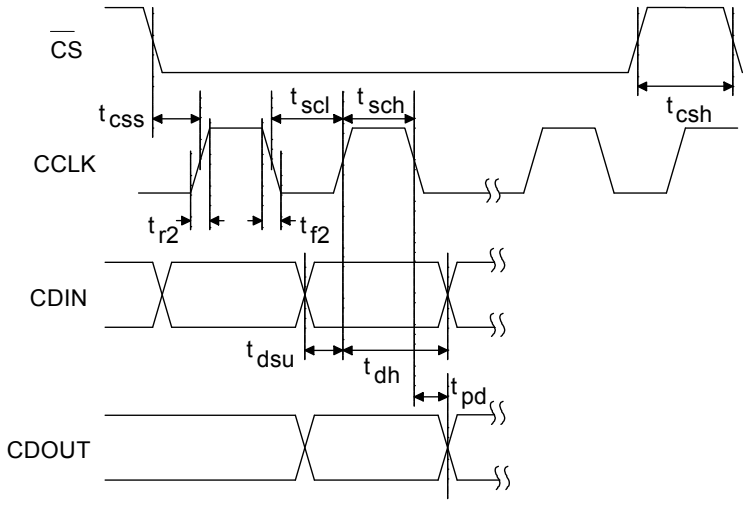

Figure 3. SPI Mode timing

SWITCHING CHARACTERISTICS - CONTROL PORT - I²C MODE

Note 17, Inputs: Logic 0 = 0 V, Logic 1 = VL+; C_L = 20 pF.

Parameter	Symbol	Min	Typ	Max	Units
SCL Clock Frequency	f_{scl}	-	-	100	kHz
Bus Free Time Between Transmissions	t_{buf}	4.7	-	-	µs
Start Condition Hold Time (prior to first clock pulse)	t_{hdst}	4.0	-	-	µs
Clock Low Time	t_{low}	4.7	-	-	µs
Clock High Time	t_{high}	4.0	-	-	µs
Setup Time for Repeated Start Condition	t_{sust}	4.7	-	-	µs
SDA Hold Time from SCL Falling (Note 18)	t_{hdd}	0	-	-	µs
SDA Setup Time to SCL Rising	t_{sud}	250	-	-	ns
Rise Time of Both SDA and SCL Lines	t_r	-	-	25	ns
Fall Time of Both SDA and SCL Lines	t_f	-	-	25	ns
Setup Time for Stop Condition	t_{susp}	4.7	-	-	µs

Notes: 17. I²C protocol is supported only in VL+ = 5.0 V mode.

18. Data must be held for sufficient time to bridge the 25 ns transition time of SCL.

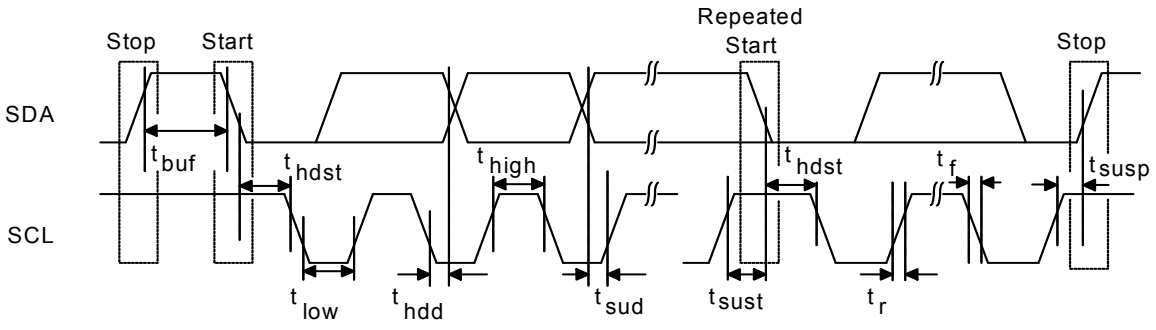

Figure 4. I²C Mode timing

2. TYPICAL CONNECTION DIAGRAM

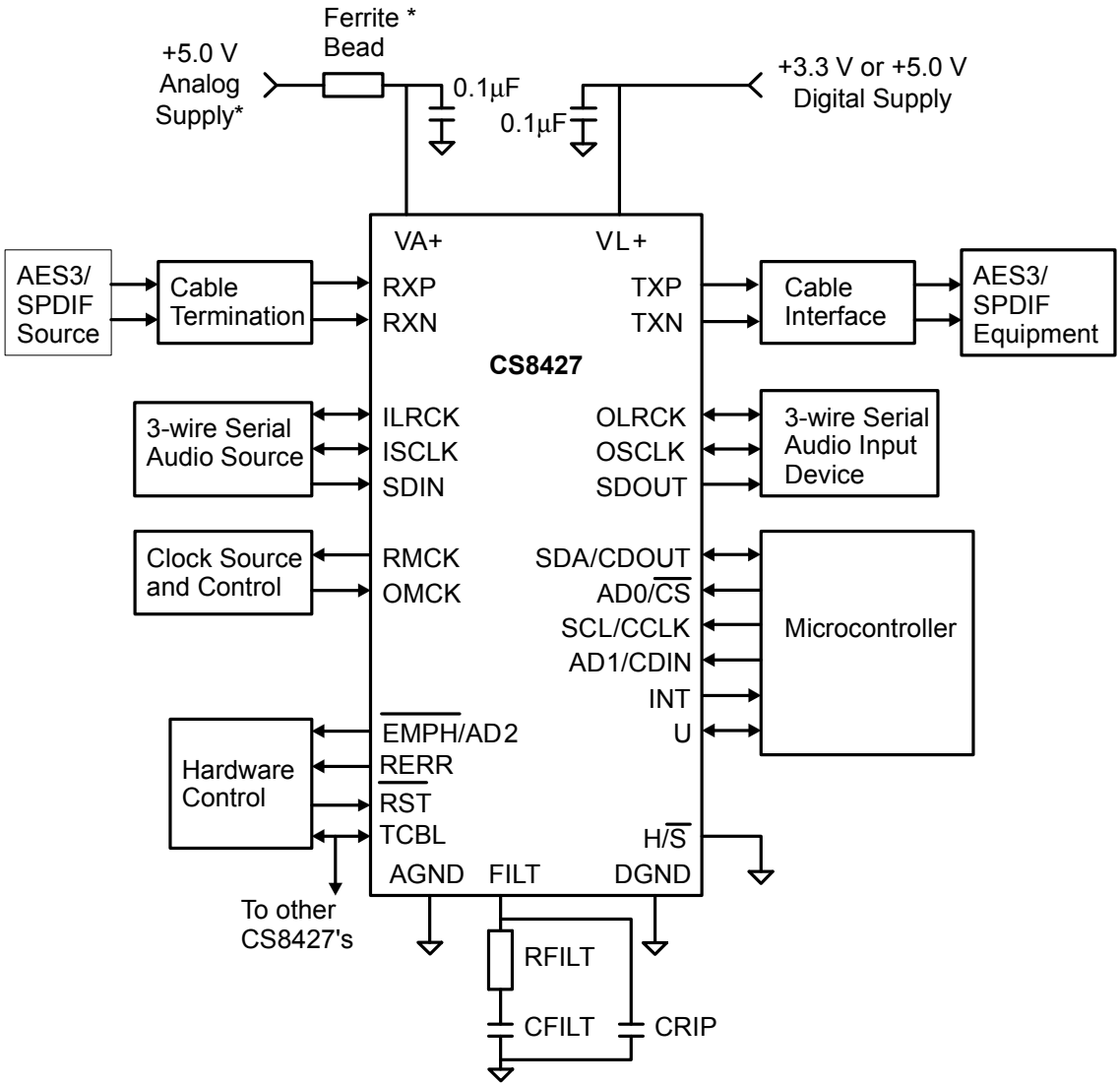

* A separate analog supply is only necessary in applications where RMCK is used for a jitter sensitive task. For applications where RMCK is not used for a jitter sensitive task, connect VA+ to VD+ via a ferrite bead. Keep the decoupling capacitor between VA+ and AGND.

Figure 5. Recommended Connection Diagram for Software Mode

3. GENERAL DESCRIPTION

The CS8427 is an AES3 transceiver intended to be used in digital audio systems. Such systems include digital mixing consoles, effects processors, digital recorders, and computer multimedia systems.

3.1 Audio Input/Output Ports

The CS8427 has the following Audio ports:

- Serial Audio Input Port
- Serial Audio Output Port
- AES3 or S/PDIF Receiver
- AES3 or S/PDIF Transmitter

The Serial Audio ports use a three-wire format. This consists of a serial audio data stream, a left-right clock defining the boundaries of the audio sample frames, and a serial clock signal clocking the data bits.

A Serial Audio port may operate in either Master or Slave mode. When a port is a Master, it supplies the left-right clock and the serial clock to the external device that is sending or receiving the serial data. A port in slave mode must have its left-right clock and its serial clock supplied by an external device so that it may send or receive serial audio data.

The input sample rate is determined by the stream applied to the Serial Audio Input or to the AES3 Receiver. A phase-locked loop recovers RMCK, the input master clock signal, from the chosen input stream.

The output from the device may be through the Serial Audio Output, the AES3 Transmitter, or from both simultaneously. In some configurations, all audio ports of the device may be in use at the same time.

3.2 Serial Control Port

Besides the functional blocks already described, the device also has a control port that allows the user to read and write the control registers that configure the part. The control port is capable of operating in either SPI or I²C serial mode. This port also has access to buffer memory that allows the user to control what is transmitted in the Channel Status and User bits of the outgoing AES3 stream.

The control port is clocked by the serial clock signal that the user's microcontroller sends it. The MCU can read and write the registers even when the RMCK and OMCK clocks are not running. The Channel Status and User bit buffer memories depend on clocking from RMCK and OMCK. They will not function unless the clocks are running, and the RUN bit in the Clock Source Control register is set.

There is also an interrupt signal associated with the Serial Control Port and the internal registers. The format of the interrupt may be chosen by a register setting. There are two interrupt status registers and their associated interrupt mask registers.

3.3 Channel Status and User bit Memory

The memory architecture consists of three buffers to handle the Channel Status information, and another three buffers to handle the User bits. The data recovery logic extracts the Channel Status and User bits from the AES3 stream and places them in their respective D buffers. Each buffer contains 384 bits.

This is enough memory to hold a complete block of Channel Status bits from both A and B channels and a complete block of User bits.

When the D buffers are full, the chip transfers their contents into the E buffers. While in the E buffers the Channel Status and User bits may be read or written through the control port. This allows the user to alter them to suit the needs of the application. The control bit BSEL, in the Channel Status Data Buffer Control register, determines whether the control port has access to the Channel Status bits or the User bits. The AES3 encoder reads the Channel Status and User bits from the F buffers and inserts them into the outgoing AES3 stream. After the F buffers bits are transmitted, the device transfers the current contents of the E buffers into the F buffers.

In applications using AES3 in and AES3 out, the CS8427 can automatically transceive user data that conforms to the IEC60958 format. The CS8427 also gives the user access to the bits necessary to comply with the serial copy management system (SCMS).

In applications where the user want to read/modify/write the Channel Status information that requires a microcontroller to actively manage the

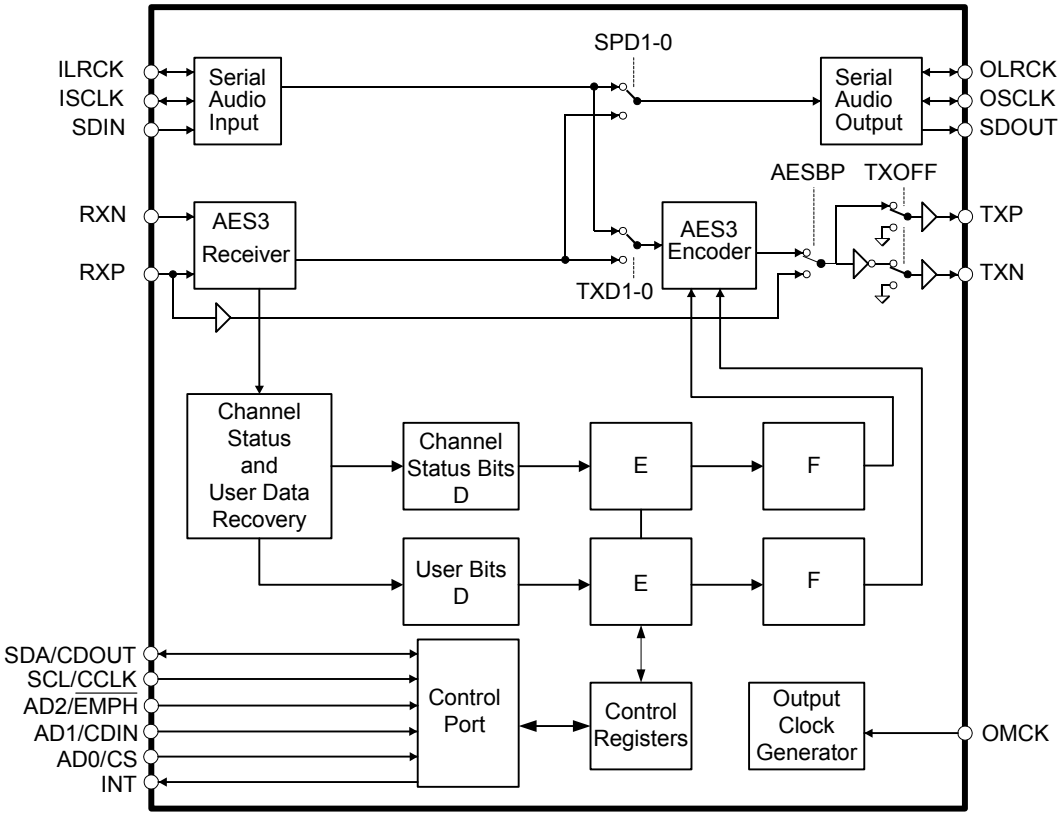

Figure 6. CS8427 Internal Block Diagram

Channel Status bits. The part also has a feature that allows the first five bytes of Channel Status memory to be configured and transmitted in each channel status block without change. See "Appendix A: External AES3/SPDIF/IEC60958 Transmitter and Receiver Components" on page 50 for a tutorial in Channel Status and User bit management.

3.4 AES3 and S/PDIF Standards Documents

This data sheet assumes that the user is familiar with the AES3 and S/PDIF data formats. It is advisable to have current copies of the AES3 and IEC60958 specifications on hand for easy reference.

The latest AES3 standard is available from the Audio Engineering Society or ANSI at www.aes.org or www.ansi.org. Obtain the latest IEC60958 standard from ANSI or from the International Electrotechnical Commission at www.iec.ch. The latest EIAJ CP-1201 standard is available from the Japanese Electronics Bureau.

Crystal Application Note AN22: *Overview of Digital Audio Interface Data Structures* contains a useful tutorial on digital audio specifications, but it should not be considered a substitute for the standards.

The paper, *An Understanding and Implementation of the SCMS Serial Copy Management System for Digital Audio Transmission*, by Clifton Sanchez, is an excellent tutorial on SCMS. It is available from the AES as preprint 3518.

4. DATA I/O FLOW AND CLOCKING OPTIONS

The CS8427 can be configured for several connectivity alternatives, called data flows. Figure 7. "Software Mode Audio Data Flow Switching Options" on page 19 shows the data flow switching, along with the control register bits which control the switches; this drawing only shows the audio data paths for simplicity. This drawing only shows the audio data paths for simplicity. Figure 8 shows the internal

clock routing and the associated control register bits. The clock routing constraints determine which data routing options are actually usable. Users should note that not all the possible data flow switch setting combinations are valid, because of the clock distribution architecture.

The AESBP switch, shown in Figure 7, allows a TTL level bi-phase, mark-encoded data stream connected to RXP to be routed to the TXP and TXN pin drivers. The TXOFF switch causes the TXP and TXN outputs to be driven to ground.

There are two possible clock sources. The first, designated the recovered clock, is the output of the PLL, and is output through the RMCK pin. The input to the PLL can be either the incoming AES3 data stream or the ILRCK word rate clock from the serial audio input port. The second clock is input through the OMCK pin and would normally be a crystal derived stable clock. The Clock Source Control Register bits determine which clock is used to operate the CS8427.

The CS8427 has another constraint related to the state machine that governs the startup of the part. The startup state machine doesn't complete its process until the PLL has locked unless one is in the transmitter dataflow (See Figure 10). The consequence of this is that the transmitter will not transmit until the PLL has locked. If you wish to use the part in transceiver mode and this constraint is a problem, there is a work around. Start the part up in its default configuration and allow the PLL to lock to a signal on the ILRCK pin, then without stopping the part, reconfigure it to the transceiver mode.

By studying the following drawings and appropriately setting the Data Flow Control and Clock Source Control register bits, the CS8427 can be configured to fit a variety of customer requirements. Please note that applications implementing both the Serial Audio Output Port and the AES3 Transmitter must operate at the same sample rate because they are both controlled by the same clock source.

Figure 9 shows the entire data path clocked by the PLL generated recovered clock. Figure 10 illustrates a standard AES3 receiver function. Figure 11 shows a standard AES3 transmitter function without PLL. Figure 12 shows a standard AES3 transmitter function with PLL.

5. THREE-WIRE SERIAL AUDIO PORTS

A 3-wire serial audio input port and a 3-wire serial audio output port is provided. Each port can be adjusted to suit the attached device by setting the control registers. The following parameters are adjustable: master or slave, serial clock frequency, audio data resolution, left or right justification of the data relative to left/right clock, optional 1-bit cell delay of the 1st data bit, the polarity of the bit clock, and the polarity of the left/right clock. By setting the appropriate control bits, many formats are possible.

Figure 15 shows a selection of common input formats, along with the control bit settings. It should be noted that in right justified mode, the serial audio output data is “MSB extended”. This means that in a sub-frame where the MSB of the data is '1', all bits preceding the MSB in the sub-frame will also be '1'. Conversely, in a sub-frame where the MSB of the data is '0', all bits preceding the MSB in the sub-frame will also be '0'.

The clocking of the input section of the CS8427 may be derived from the incoming ILRCK word rate clock, using the on-chip PLL. The PLL operation is described in “AES3 Receiver” on page 16. In the case of use with the serial audio input port, the PLL locks onto the leading edges of the ILRCK clock.

Figure 16 shows a selection of common output formats, along with the control bit settings. A special AES3 direct output format is included, which allows serial output port access to the V, U, and C bits embedded in the serial audio data stream. The P bit is replaced by a Z bit that marks the subframe just prior to the start of each block. This format is only available when the serial audio output port is being clocked by the AES3 receiver recovered clock.

In master mode, the left/right clock and the serial bit clock are outputs, derived from the appropriate clock domain master clock.

In slave mode, the left/right clock and the serial bit clock are inputs. The left/right clock must be synchronous to the appropriate master clock, but the serial bit clock can function in asynchronous burst mode if desired. By appropriate phasing of the left/right clock and control of the serial clocks, CS8427’s can be multiplexed to share one serial port. The left/right clock should be continuous, but the duty cycle does not have to be 50%, provided that enough serial clocks are present in each phase to clock all the data bits. When in slave mode, the serial audio output port must not be set to right justified data.

When using the serial audio output port in slave mode with an OLRCK input which is asynchronous to the port’s data source, an interrupt bit (OSLIP) is provided to indicate when repeated or dropped samples occur.

6. AES3 RECEIVER

The CS8427 includes an AES3 digital audio receiver and an AES3 digital audio transmitter. A comprehensive buffering scheme provides read/write access to the channel status and user data. This buffering scheme is described in "Appendix B: Channel Status and User Data Buffer Management".

The AES3 receiver accepts and decodes audio and digital data according to the AES3, IEC60958 (S/PDIF), and EIAJ CP-1201 interface standards. The receiver consists of a differential input stage, accessed through pins RXP and RXN, a PLL based clock recovery circuit, and a decoder which separates the audio data from the channel status and user data.

External components are used to terminate and isolate the incoming data cables from the CS8427. These components are detailed in "Appendix A: External AES3/SPDIF/IEC60958 Transmitter and Receiver Components" on page 50.

6.1 OMCK System Clock Mode

A special mode is available that allows the clock that is being input through the OMCK pin to be output through the RMCK pin. This feature is controlled by the SWCLK bit in control register 1. When the PLL loses lock, the frequency of the VCO drops to 300 kHz. The SWCLK function allows the clock from RMCK to be used as a clock in the system without any disruption when input is removed from the Receiver. This clock switching is performed glitch free. None of the internal circuitry that is clocked from the PLL is driven by the OMCK being output from RMCK. This function is available only in software mode.

6.2 PLL, Jitter Attenuation, and Varispeed

Please see Appendix C for general description of the PLL, selection of recommended PLL filter components, and layout considerations. Figure 5 shows the recommended configuration of the two capacitors and one resistor that comprise the PLL filter.

6.3 Error Reporting and Hold Function

While decoding the incoming AES3 data stream, the CS8427 can identify several kinds of error, indicated in the Receiver Error register. The UNLOCK bit indicates whether the PLL is locked to the incoming AES3 data. The V bit reflects the current validity bit status. The BIP (bi-phase) error bit indicates an error in incoming bi-phase coding. The PAR (parity) bit indicates a received parity error.

The error bits are "sticky": they are set on the first occurrence of the associated error and will remain set until the user reads the register through the control port. This enables the register to log all unmasked errors that occurred since the last time the register was read.

The Receiver Error Mask register allows masking of individual errors. The bits in this register serve as masks for the corresponding bits of the Receiver Error Register. If a mask bit is set to 1, the error is unmasked, which implies the following: its occurrence will be reported in the receiver error register, induce a pulse on RERR, invoke the occurrence of a RERR interrupt, and affect the current audio sample according to the status of the HOLD bits. The HOLD bits allow a choice of holding the previous sample, replacing the current sample with zero (mute), or not changing the current audio sample. If a mask bit is set to 0, the error is masked, which implies the following: its occurrence will not be reported in the receiver error register, will not induce a pulse on RERR or generate a RERR interrupt, and will not affect the current audio sample. The QCRC and CCRC errors do not affect the current audio sample, even if unmasked

6.4 Channel Status Data Handling

The first two bytes of the Channel Status block are decoded into the Receiver Channel Status register. The setting of the CHS bit in the Channel Status Data Buffer Control register determines whether the channel status decodes are from the A channel (CHS = 0) or B channel (CHS = 1).

The PRO (professional) bit is extracted directly. For consumer data, the COPY (copyright) bit is extracted, and the category code and L bits are decoded to determine SCMS status, indicated by the ORIG (original) bit. If the category code is set to

General on the incoming AES3 stream, copyright will always be indicated even when the stream indicates no copyright. Finally, the AUDIO bit is extracted and used to set an AUDIO indicator, as described in the Non-Audio Auto-Detection section below.

If 50/15 µs pre-emphasis is detected, the state of the EMPH pin is adjusted accordingly.

The encoded channel status bits which indicate sample word length are decoded according to AES3-1992 or IEC 60958. Audio data routed to the serial audio output port is unaffected by the word length settings - all 24 bits are passed on as received.

"Appendix B: Channel Status and User Data Buffer Management" on page 52 describes the overall handling of Channel Status and User bit data.

6.5 User Data Handling

The incoming user data is buffered in a user accessible buffer. Various automatic modes of re-transmitting received User data are provided. The Appendix: Channel Status and User Data Buffer Management describes the overall handling of CS and U data.

Received User data may also be output to the U pin, under the control of a control register bit. Depending on the data flow and clocking options selected, there may not be a clock available to qualify the U data output. Figure 13 illustrates the timing.

If the incoming user data bits have been encoded as Q-channel subcode, the data is decoded and presented in ten consecutive register locations. An interrupt may be enabled to indicate the decoding of a new Q-channel block, which may be read through the control port.

6.6 Non-Audio Auto Detection

An AES3 data stream may be used to convey non-audio data, thus it is important to know whether the incoming AES3 data stream is digital audio or not. This information is typically conveyed in channel status bit 1 (AUDIO), which is extracted automatically by the CS8427. However, certain non-audio sources, such as AC3® or MPEG encoders, may not adhere to this convention, and the bit may not be properly set. The CS8427 AES3 receiver can detect such non-audio data. This is accomplished by looking for a 96-bit sync code, consisting of 0x0000, 0x0000, 0x0000, 0x0000, 0xF872, and 0x4E1F. When the sync code is detected, an internal AUTODETECT signal will be asserted. If no additional sync codes are detected within the next 4096 frames, AUTODETECT will be de-asserted until another sync code is detected. The AUDIO bit in the Receiver Channel Status register is the logical OR of AUTODETECT and the received channel status bit 1. If non-audio data is detected, the data is still processed exactly as if it were normal audio. It is up to the user to mute the outputs as required.

7. AES3 TRANSMITTER

The AES3 transmitter encodes and transmits audio and digital data according to the AES3, IEC60958 (S/PDIF), and EIAJ CP-1201 interface standards. Audio and control data are multiplexed together and bi-phase, mark encoded. The resulting bit stream is driven to an output connector either directly or through a transformer.

The transmitter clock may be derived from the clock input pin OMCK, or from the incoming data. If OMCK is asynchronous to the data source, an interrupt bit (TSLIP) is provided that will go high every time a data sample is dropped or repeated. Be aware that the pattern of slips does not have hysteresis and so the occurrence of the interrupt condition is not deterministic.

The channel status (C) and user channel (U) bits in the transmitted data stream are taken from storage areas within the CS8427. The user can manually access the internal storage or configure the CS8427 to run in one of several automatic modes. The Appendix: Channel Status and User Data Buffer Management provides detailed descriptions of each automatic mode and describes methods of manually accessing the storage areas. The transmitted user data can optionally be input through the U pin, under the control of a control port register bit. Figure 13 shows the timing requirements for clocking U data through the U pin.

7.1 Transmitted Frame and Channel Status Boundary Timing

The TCBL pin is used to control or indicate the start of transmitted channel status block boundaries and may be used as an input or output.

In some applications, it may be necessary to control the precise timing of the transmitted AES3 frame boundaries. This may be achieved in three ways:

1) With TCBL set to input, driving TCBL high for >3 OMCK clocks will cause a frame start, as well as a new channel status block start.
2) If the AES3 output comes from the AES3 input, setting TCBL as output will cause AES3 output frame boundaries to align with AES3 input frame boundaries.
3) If the AES3 output comes from the serial audio input port while the port is in slave mode and TCBL is set to output, the start of the A channel sub-frame will be aligned with the leading edge of IL-CK.

7.2 TXN and TXP Drivers

The line drivers are low skew, low impedance, differential outputs capable of driving cables directly. Both drivers are set to ground during reset ($\overline{RST}$ = low), when no AES3 transmit clock is provided, and optionally under the control of a register bit. The CS8427 also allows immediate mute of the AES3 transmitter audio data through a control register bit.

External components are used to terminate and isolate the external cable from the CS8427. These components are detailed in Appendix A: External AES3/SPDIF/IEC60958 Transmitter and Receiver Components.

8. MONO MODE OPERATION

An AES3 stream may be used in more than one way to transmit 96-kHz sample rate data. One method is to double the frame rate of the current format. This results in a stereo signal with a sample rate of 96 kHz, carried over a single twisted pair cable. An alternate method is implemented using the two sub-frames in a 48-kHz frame rate AES3 signal to carry consecutive samples of a mono signal, resulting in a 96-kHz sample rate stream. This allows older equipment, whose AES3 transmitters and receivers are not rated for 96-kHz frame rate operation, to handle 96-kHz sample rate information. In this “mono mode”, two AES3 cables are needed for stereo data transfer. The CS8427 offers mono mode operation for the AES3 receiver and the AES3 transmitter. The receiver and transmitter sections may be independently set to mono mode through the MMR and MMT control bits.

8.1 Receiver Mono Mode

The receiver mono mode effectively doubles the input frame rate, Fsi. The clock output on the RMCK pin tracks Fsi, and thus is doubled in frequency compared to stereo mode. The receiver will run at a frame rate of Fsi/2, and the serial audio output port will run at Fsi. Sub-frame A data will be routed to both the left and right data fields on SD-OUT. Similarly, sub-frame B data will be routed to both the left and right data fields of the next word clock cycle of SDOUT.

Using receiver mono mode is only necessary if the serial audio output port must run at 96 kHz. If the CS8427 is kept in normal stereo mode and receives AES3 data arranged in mono mode, the serial audio output port will run at 48 kHz, with left and right data fields representing consecutive audio samples.

8.2 Transmitter Mono Mode

In transmitter mono mode, the input port will run at the audio sample rate (Fso), while the AES3 transmitter frame rate will be at Fso/2. Consecutive left or right channel serial audio data samples may be selected for transmission on the A and B subframes, and the channel status block transmitted is also selectable.

Using transmitter mono mode is only necessary if the incoming audio sample rate is already at 96 kHz and contains both left and right audio data words. The “mono mode” AES3 output stream may also be achieved by keeping the CS8427 in normal stereo mode and placing consecutive audio samples in the left and right positions of an incoming data stream with a 48-kHz word rate.

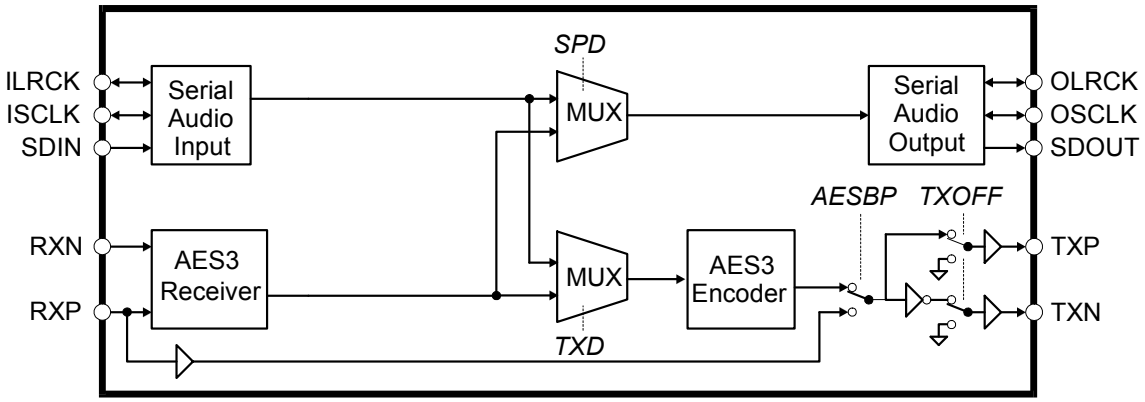

Figure 7. Software Mode Audio Data Flow Switching Options

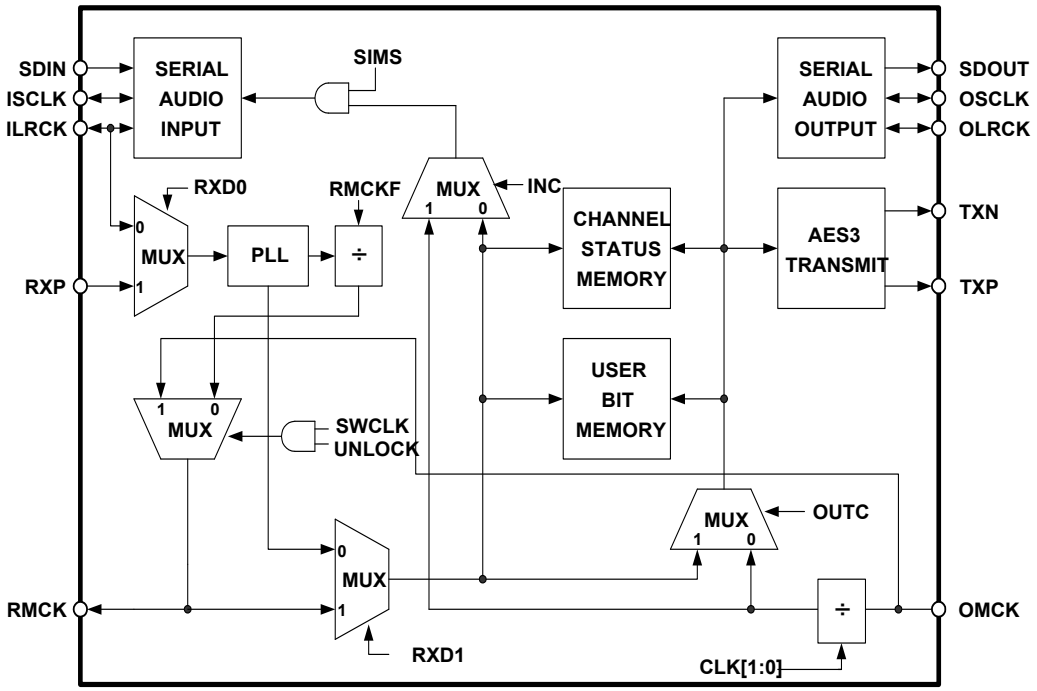

* Note: When SWCLK mode is enabled, signal input on OMCK is only output through RMCK and not routed back through the RXD1 multiplexer; RMCK is not bi-directional in this mode.

Figure 8. CS8427 Clock Routing

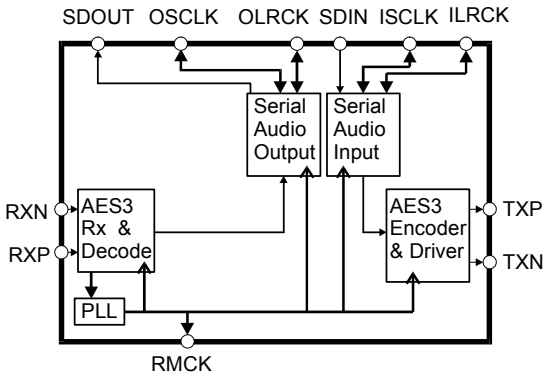

Data Flow Control Bits
TXD1-0: 01
SPD1-0: 10

Clock Source Control Bits
OUTC: 1
INC: 0
RXD1-0: 01

Figure 9. AES3 Input to Serial Audio Output, Serial Audio Input to AES3 Out

NOTE: Applications implementing both the Serial Audio Output Port and the AES3 Transmitter must operate at the same sample rate because they are both controlled by the same clock source.

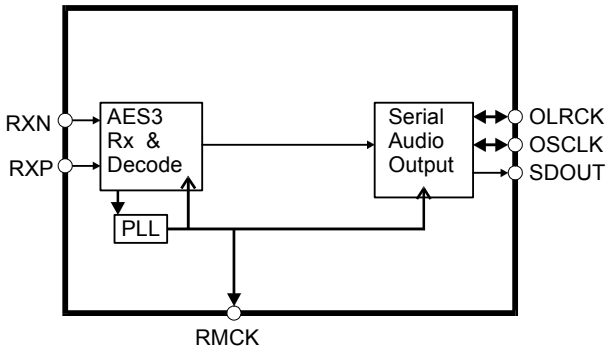

Data Flow Control Bits
TXD1-0: 10
SPD1-0: 10
TXOFF : 1

Clock Source Control Bits
OUTC: 1
INC: 0
RXD1-0: 01

Figure 10. AES3 Input to Serial Audio Output Only

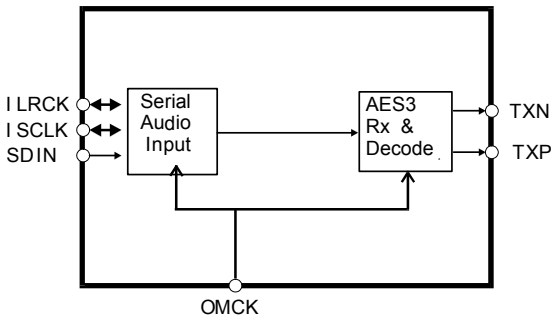

Data Flow Control Bits
TXD1-0: 01
SPD1-0: 01

Clock Source Control Bits
OUTC: 0
INC: 1
RXD1-0: 00

Figure 11. Input Serial Port to AES3 Transmitter without PLL

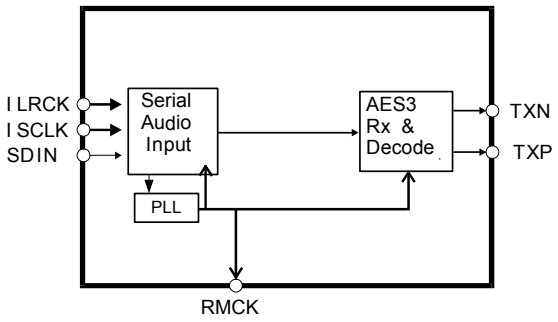

Data Flow Control Bits
TXD1-0: 01
SPD1-0: 01

Clock Source Control Bits
OUTC: 1
INC: 0
RXD1-0: 00

Figure 12. Input Serial Port to AES3 Transmitter with PLL

NOTE: In this mode, ILRCK and ISCLK are inputs only.

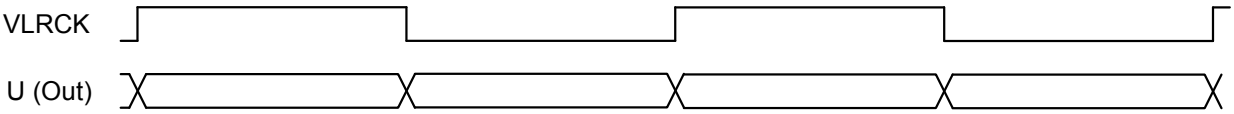

VLRCK is a virtual word clock, which may not exist, but is used to illustrate the U timing.
VLRCK duty cycle is 50%. VLRCK frequency is always equal to the incoming frame rate.
If the serial audio output port is in master mode, VLRCK = OLRCK.
If the serial audio output port is in slave mode, then VLRCK needs to be externally created, if required.
U transitions are aligned within ±1% of VLRCK period to VLRCK edges

Figure 13. AES3 Receiver Timing for U pin output data

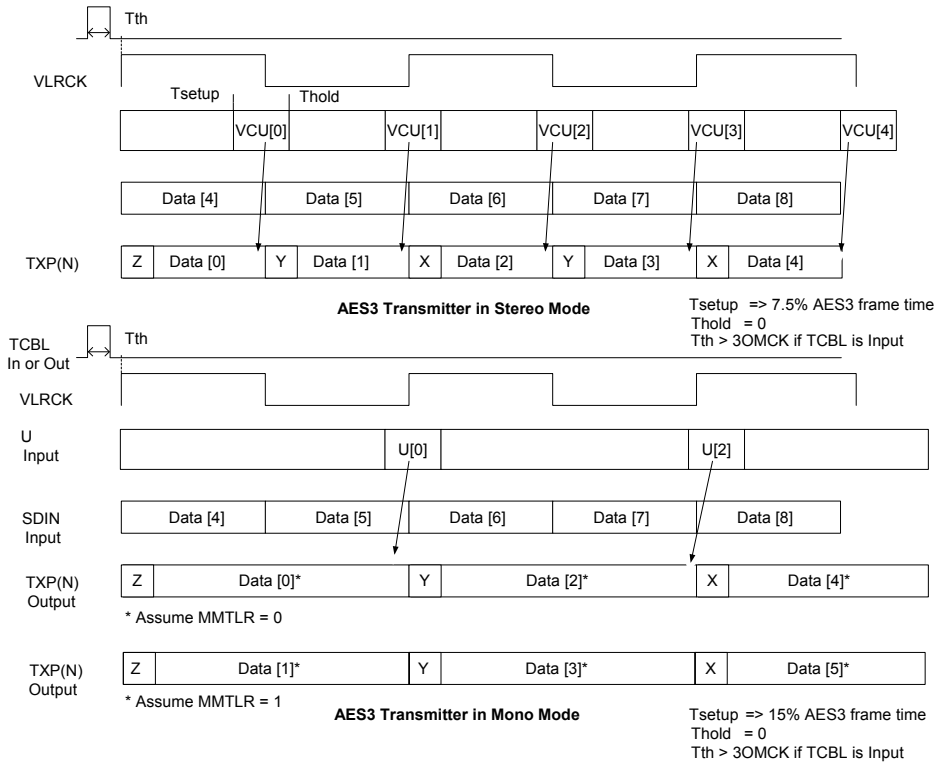

VLRCK is a virtual word clock, which may not exist, is used to illustrate the CUV timing.
VLRCK duty cycle is 50%.
In stereo mode, VLRCK frequency = AES3 frame rate. In mono mode, ALRCK frequency = 2xAES3 frame rate.
If the serial audio input port is on slave mode and TCBL is an output, then VLRCK=ILRCK if SILRPOL=0 and VLRCK= $\overline{\text{ILRCK}}$ if SILRPOL =1.
If the serial audio input port is in master mode and TCBL is an input, then VLRCK=ILRCK if SILRPOL=0 and VLRCK= $\overline{\text{ILRCK}}$ if SILRPOL =1.

Figure 14. AES3 Transmitter Timing for C, U and V pin input data

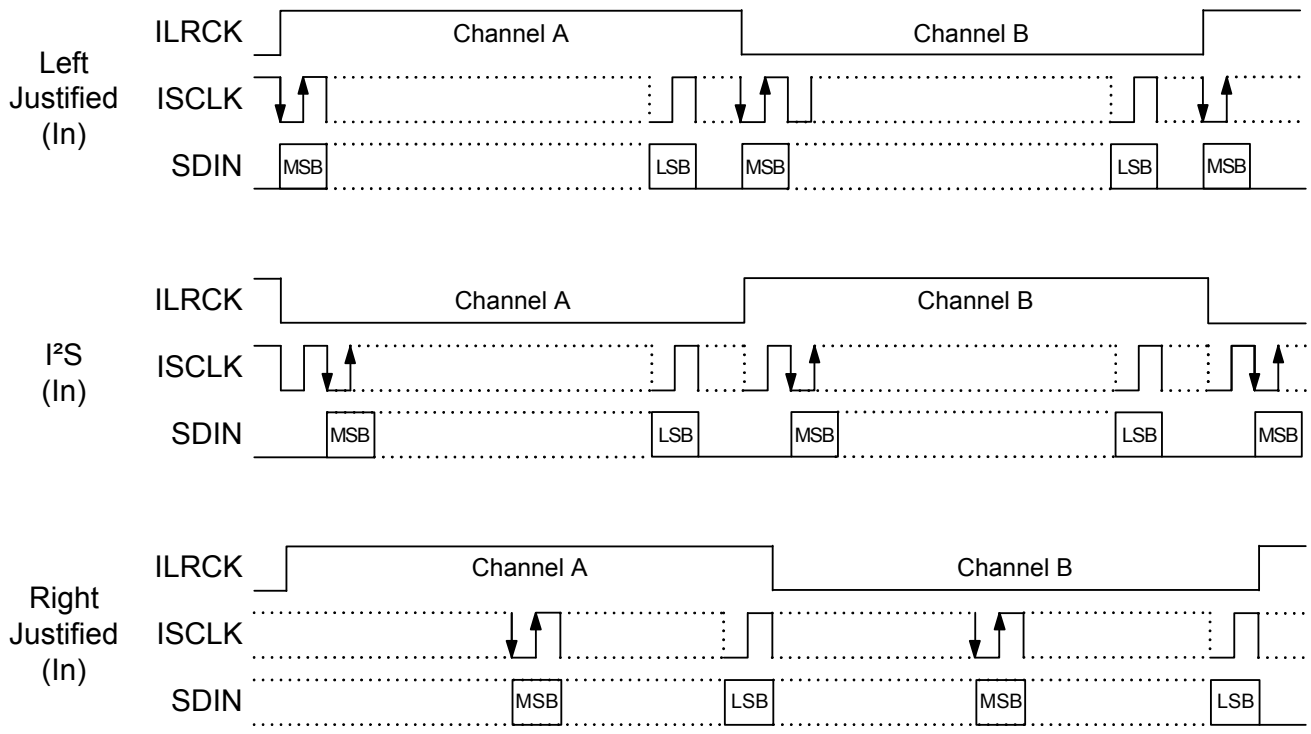

	SIMS*	SISF*	SIRES*[1:0]	SIJUST*	SIDEL*	SISPOL*	SILRPOL*
Left Justified	X	X	00+	0	0	0	0
I²S	X	X	00+	0	1	0	1
Right Justified	X	X	XX	1	0	0	0

X = don't care to match format, but does need to be set to the desired setting

+ I²S can accept an arbitrary number of bits, determined by the number of ISCLK cycles

* See Serial Input Port Data Format Register Bit Descriptions for an explanation of the meaning of each bit

Figure 15. Serial Audio Input Example Formats

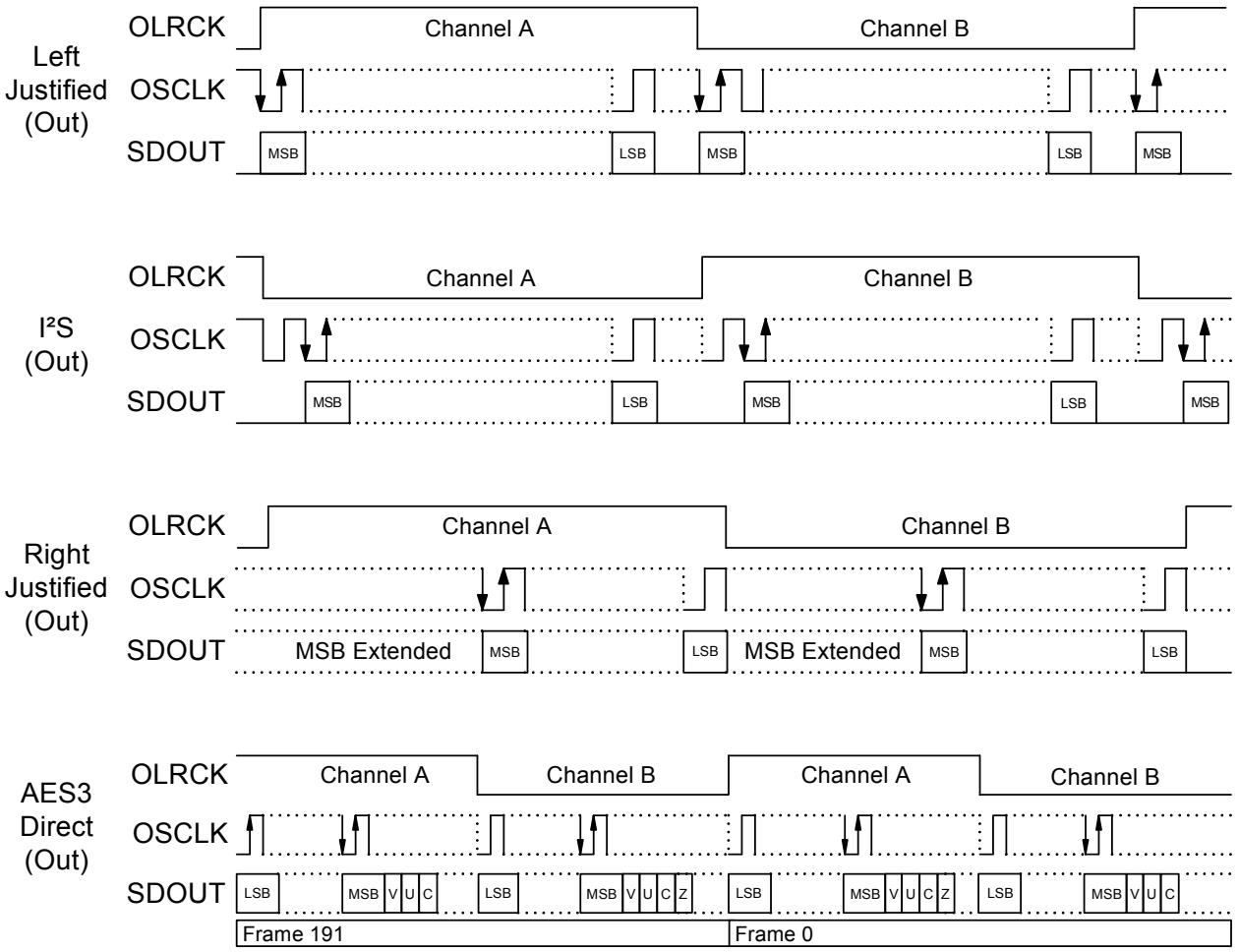

	SOMS*	SOSF*	SORES[1:0]*	SOJUST*	SODEL*	SOSPOL*	SOLRPOL*
Left Justified	X	X	XX	0	0	0	0
I²S	X	X	XX	0	1	0	1
Right Justified	1	X	XX	1	0	0	0
AES3 Direct	X	X	11	0	0	0	0

X = don't care to match format, but does need to be set to the desired setting

* See Serial Output Data Format Register Bit Descriptions for an explanation of the meaning of each bit

Figure 16. Serial Audio Output Example Formats

9. CONTROL PORT DESCRIPTION AND TIMING

The control port is used to access the registers, allowing the CS8427 to be configured for the desired operational modes and formats. In addition, Channel Status and User data may be read and written through the control port. The operation of the control port may be completely asynchronous with respect to the audio sample rates. However, to avoid potential interference problems, the control port pins should remain static if no operation is required.

The control port has two modes: SPI and I²C, with the CS8427 acting as a slave device. SPI mode is selected if there is a high to low transition on the AD0/CS pin after the RST pin has been brought high. I²C mode is selected by connecting the AD0/CS pin to VL+ or DGND, thereby permanently selecting the desired AD0 bit address state.

9.1 SPI™ Mode

In SPI mode, CS is the CS8427 chip select signal; CCLK is the control port bit clock (input into the CS8427 from the microcontroller); CDIN is the input data line from the microcontroller; CDOUT is the output data line to the microcontroller. Data is clocked in on the rising edge of CCLK and out on the falling edge.

Figure 17 shows the operation of the control port in SPI mode. To write to a register, bring CS low. The first seven bits on CDIN form the chip address and must be 0010000b. The eighth bit is a read/write indicator (R/W), which should be low to write. The next eight bits form the Memory Address Pointer (MAP), which is set to the address of the register that is to be updated. The next eight bits are the data which will be placed into the register designated by the MAP. During writes, the CDOUT output stays in the Hi-Z state. It may be externally pulled high or low with a 47 kΩ resistor, if desired.

There is a MAP auto increment capability, enabled by the INCR bit in the MAP register. If INCR is a zero, the MAP will stay constant for successive read or writes. If INCR is set to a 1, then the MAP will autoincrement after each byte is read or written, allowing block reads or writes of successive registers.

To read a register, the MAP has to be set to the correct address by executing a partial write cycle which finishes (CS high) immediately after the MAP byte. The MAP auto increment bit (INCR) may be set or not, as desired. To begin a read, bring CS low, send out the chip address, and set the read/write bit (R/W) high. The next falling edge of CCLK will clock out the MSB of the addressed register (CDOUT will leave the high impedance state). If the MAP auto increment bit is set to 1, the data for successive registers will appear consecutively.

9.2 I²C Mode

In I²C mode, SDA is a bidirectional data line. Data is clocked into and out of the part by SCL, with the clock to data relationship as shown in Figure 18. There is no CS pin. Each individual CS8427 is given a unique address. Pins AD0 and AD1 form the two least significant bits of the chip address and should be connected to VL+ or DGND as desired. The EMPH pin is used to set the AD2 bit, by connecting a resistor from the EMPH pin to VL+ or to DGND. The state of the pin is sensed while the CS8427 is being reset. The upper four bits of the seven bit address field are fixed at 0010b. To communicate with a CS8427, the chip address field, which is the first byte sent to the CS8427, should be 0010b followed by the settings of the EMPH, AD1, and AD0. The eighth bit of the address is the R/W bit. If the operation is a write, the next byte is the Memory Address Pointer (MAP) which selects the register to be read or written. If the operation is a read, the contents of the register pointed to by the MAP will be output. Setting the auto increment bit in MAP allows successive reads or writes of consecutive registers. Each byte is separated by an acknowledge bit, ACK, which is output from the CS8427 after each input byte is read. The ACK bit is input to the CS8427 from the microcontroller after each transmitted byte. I²C mode is supported only with VL+ = 5.0 V.

9.3 Interrupts

The CS8427 has a comprehensive interrupt capability. The INT output pin is intended to drive the interrupt input pin on the host microcontroller. The INT pin may be set to be active low, active high, or active low with no active pull-up transistor. This last

mode is used for active-low, wired-OR hook-ups with multiple peripherals connected to the microcontroller interrupt input pin.

Many conditions can cause an interrupt, as listed in the interrupt status register descriptions. Each source may be masked off using mask register bits. In addition, each source may be set to rising edge, falling edge, or level-sensitive. Combined with the option of level-sensitive or edge-sensitive modes within the microcontroller, many different set-ups are possible depending on the needs of the equipment designer.

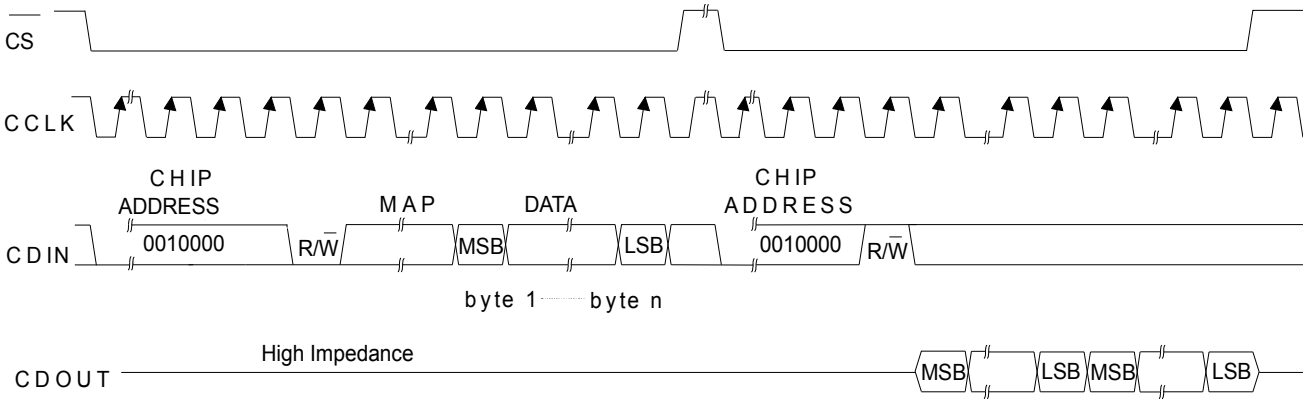

MAP = Memory Address Pointer, 8 bits, MSB first

Figure 17. Control Port Timing in SPI Mode

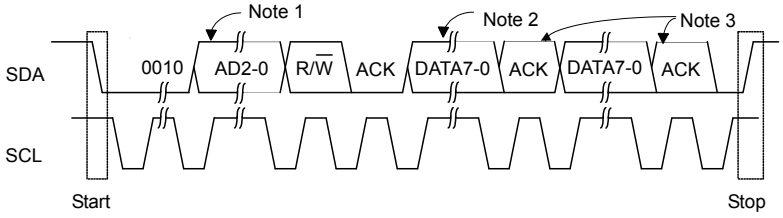

Note 1: AD2 is derived from a resistor attached to the EMPH pin, AD1 and AD0 are determined by the state of the corresponding pins

Note 2: If operation is a write, this byte contains the Memory Address Pointer, MAP

Note 3: If operation is a read, the last bit of the read should be a NACK(high)

Figure 18. Control Port Timing in I²C Mode

10. CONTROL PORT REGISTER SUMMARY

Addr (HEX)	Function	7	6	5	4	3	2	1	0
00	Reserved	0	0	0	0	0	0	0	0
01	Control 1	SWCLK	VSET	MUTESAO	MUTEAES	0	INT1	INT0	TCBLD
02	Control 2	0	HOLD1	HOLD0	RMCKF	MMR	MMT	MMTCS	MMTLR
03	Data Flow Control	0	TXOFF	AESBP	TXD1	TXD0	SPD1	SPD0	0
04	Clock Source Control	0	RUN	CLK1	CLK0	OUTC	INC	RXD1	RXD0
05	Serial Input Format	SIMS	SISF	SIRES1	SIRES0	SIJUST	SIDEL	SISPOL	SILRPOL
06	Serial Output Format	SOMS	SOSF	SORES1	SORES0	SOJUST	SODEL	SOSPOL	SOLRPOL
07	Interrupt 1 Status	TSLIP	OSLIP	0	0	0	DETC	EFTC	RERR
08	Interrupt 2 Status	0	0	0	0		EFTU	QCH	0
09	Interrupt 1 Mask	TSLIPM	OSLIPM	0	0	0	DETCM	EFTCM	RERRM
0A	Interrupt 1 Mode (MSB)	TSLIP1	OSLIP1	0	0	0	DETC1	EFTC1	RERR1
0B	Interrupt 1 Mode (LSB)	TSLIP0	OSLIP0	0	0	0	DETC0	EFTC0	RERR0
0C	Interrupt 2 Mask	0	0	0	0	DETUM	EFTUM	QCHM	0
0D	Interrupt 2 Mode (MSB)	0	0	0	0	DETU1	EFTU1	QCH1	0
0E	Interrupt 2 Mode (LSB)	0	0	0	0	DETU0	EFTU0	QCH0	0
0F	Receiver CS Data	AUX3	AUX2	AUX1	AUX0	PRO	$\overline{\text{AUDIO}}$	COPY	ORIG
10	Receiver Errors	0	QCRC	CCRC	UNLOCK	V	CONF	BIP	PAR
11	Receiver Error Mask	0	QCRCM	CCRCM	UNLOCKM	VM	CONFM	BIPM	PARM
12	CS Data Buffer Control	0	0	BSEL	CBMR	DETCI	EFTCI	CAM	CHS
13	U Data Buffer Control	0	0	0	UD	UBM1	UBM0	DETUI	EFTUI
14-1D	Q sub-code Data								
1E	OMCK/RMCK Ratio	ORR7	ORR6	ORR5	ORR4	ORR3	ORR2	ORR1	ORR0
1F	Reserved								
20-37	C or U Data Buffer								
7F	ID and Version	ID3	ID2	ID1	ID0	VER3	VER2	VER1	VER0

Table 1. Control Register Map Summary

10.1 Memory Address Pointer (MAP)

7	6	5	4	3	2	1	0
INCR	MAP6	MAP5	MAP4	MAP3	MAP2	MAP1	MAP0

INCR *- Auto Increment Address Control Bit*

Default = '0'

0 - Disable

1 - Enable

MAP6:MAP0 *- Register address*

Note: Reserved registers must not be written to during normal operation. Some reserved registers are used for test modes, which can completely alter the normal operation of the CS8427.

11. CONTROL PORT REGISTER BIT DEFINITIONS

11.1 Control 1 (01h)

7	6	5	4	3	2	1	0
SWCLK	VSET	MUTESAO	MUTEAES	0	INT1	INT0	TCBLD

SWCLK *- Controls output of OMCK on RMCK when PLL loses lock*

Default = '0'

0 - RMCK default function

1 - OMCK output on RMCK pin

VSET *- Transmitted Validity bit level*

Default = '0'

0 - Indicates data is valid, linear PCM audio data

1 - Indicates data is invalid or not linear PCM audio data

MUTESAO *- Mute control for the serial audio output port*

Default = '0'

0 - Not Muted

1 - Muted

MUTEAES *- Mute control for the AES transmitter output*

Default = '0'

0 - Not Muted

1 - Muted

INT1:INT0 *- Interrupt output pin (INT) control*

Default = '00'

00 - Active high; high output indicates interrupt condition has occurred

01 - Active low, low output indicates an interrupt condition has occurred

10 - Open drain, active low. Requires an external pull up resistor on the INT pin.

11 - Reserved

TCBLD *- Transmit Channel Status Block pin (TCBL) direction specifier*

Default = '0'

0 - TCBL is an input

1 - TCBL is an output

11.2 Control 2 (02h)

7	6	5	4	3	2	1	0
0	HOLD1	HOLD0	RMCKF	MMR	MMT	MMTCS	MMTLR

HOLD1:HOLD0 *- Determine how received audio sample is affected when a receiver error occurs*

Default = '00'

00 - Hold the last valid audio sample

01 - Replace the current audio sample with 00 (mute)

10 - Do not change the received audio sample

11 - Reserved

RMCKF *- Select recovered master clock output pin frequency.*

Default = '0'

0 - RMCK is equal to 256 * Fsi

1 - RMCK is equal to 128 * Fsi

MMR *- Select AES3 receiver mono or stereo operation*

Default = '0'

0 - Normal stereo operation

1 - A and B subframes treated as consecutive samples of one channel of data. Data is duplicated to both left and right parallel outputs of the AES receiver block. The input sample rate (Fsi) is doubled compared to MMR=0

MMT *- Select AES3 transmitter mono or stereo operation*

Default = '0'

0 - Normal stereo operation

1 - Output either left or right channel inputs into consecutive subframe outputs (mono mode, left or right is determined by MMTLR bit)

MMTCS *- Select A or B channel status data to transmit in mono mode*

Default = '0'

0 - Use channel A CS data for the A subframe and use channel B CS data for the B subframe

1 - Use the same CS data for both the A and B subframe outputs. If MMTLR = 0, use the left channel CS data. If MMTLR = 1, use the right channel CS data.

MMTLR *- Channel Selection for AES Transmitter mono mode*

Default = '0'

0 - Use left channel input data for consecutive subframe outputs

1- Use right channel input data for consecutive subframe outputs

11.3 Data Flow Control (03h)

7	6	5	4	3	2	1	0
0	TXOFF	AESBP	TXD1	TXD0	SPD1	SPD0	0

The Data Flow Control register configures the flow of audio data to/from the following blocks: Serial Audio Input Port, Serial Audio Output Port, AES3 receiver, and AES3 transmitter. In conjunction with the Clock Source Control register, multiple Receiver/Transmitter/Transceiver modes may be selected. The output data should be muted prior to changing bits in this register to avoid transients.

TXOFF *- AES3 Transmitter Output Driver Control*

Default = '0

0 - AES3 transmitter output pin drivers normal operation

1 - AES3 transmitter output pin drivers drive to 0 V.

AESBP *- AES3 bypass mode selection*

Default = '0'

0 - Normal operation

1 - Connect the AES3 transmitter driver input directly to the RXP pin, which becomes a normal TTL threshold digital input. The transmitter clock (selecting using the OUTC bit in the Clock Source Control) must be present for the bypass mode to work.

TXD1:TXD0 *- AES3 Transmitter Data Source*

Default = '01'

00 - Reserved

01 - Serial audio input port

10 - AES3 receiver

11 - Reserved

SPD1:SPD0 *- Serial Audio Output Port Data Source*

Default = '10'
00 - Reserved
01 - Serial Audio Input Port
10 - AES3 receiver
11 - Reserved

11.4 Clock Source Control (04h)

7	6	5	4	3	2	1	0
0	RUN	CLK1	CLK0	OUTC	INC	RXD1	RXD0

This register configures the clock sources of various blocks. In conjunction with the Data Flow Control register, various Receiver/Transmitter/Transceiver modes may be selected.

RUN *- Controls the internal clocks, allowing the CS8427 to be placed in a "powered down", low current consumption, state.*

Default = '0'
0 - Internal clocks are stopped. Internal state machines are reset. The fully static control port is operational, allowing registers to be read or changed. Reading and writing the U and C data buffers is not possible. Power consumption is low.
1 - Normal part operation. This bit must be written to the 1 state to allow the CS8427 to begin operation. All input clocks should be stable in frequency and phase when RUN is set to 1.

CLK1:0 *- Output side master clock input (OMCK) frequency to output sample rate (Fso) ratio selector. If these bits are changed during normal operation, then always stop the CS8427 first (RUN = 0), write the new value, then start the CS8427 (RUN = 1).*

Default = '00'
00 - OMCK frequency is 256 * Fso
01 - OMCK frequency is 384 * Fso
10 - OMCK frequency is 512 * Fso
11 - Reserved

OUTC *- Output Time Base*

Default = '0'
0 - OMCK input pin, modified by the selected divide ratio bits CLK1:0.
1 - Recovered Input Clock

INC *- Input Time Base Clock Source*

Default = '0'
0 - Recovered Input Clock
1 - OMCK input pin, modified by the selected divide ratio bits CLK1:0.

RXD1:0 *- Recovered Input Clock Source*

Default = '00'
00 - 256 * Fsi, where Fsi is derived from the ILRCK pin (only possible when the serial audio input port is in slave mode)
01 - 256 * Fsi, where Fsi is derived from the AES3 input frame rate
10 - Bypass the PLL and apply an external 256 * Fsi clock through the RMCK pin. The AES3 receiver is held in synchronous reset. This setting is useful to prevent UNLOCK interrupts when using an external RMCK and inputting data through the serial audio input port.
11 - Reserved.

11.5 Serial Audio Input Port Data Format (05h)

7	6	5	4	3	2	1	0
SIMS	SISF	SIRES1	SIRES0	SIJUST	SIDEL	SISPOL	SILRPOL

SIMS *- Master/Slave Mode Selector*

Default = '0'
0 - Serial audio input port is in slave mode
1 - Serial audio input port is in master mode

SISF *- ISCLK frequency (for master mode)*

Default = '0'
0 - 64 * Fsi
1 - 128 * Fsi

SIRES1:0 *- Resolution of the input data, for right-justified formats*

Default = '00'
00 - 24 bit resolution
01 - 20 bit resolution
10 - 16 bit resolution
11 - Reserved

SIJUST *- Justification of SDIN data relative to ILRCK*

Default = '0'
0 - Left-justified
1 - Right-justified

SIDEL *- Delay of SDIN data relative to ILRCK, for left-justified data formats*

Default = '0'
0 - MSB of SDIN data occurs in the first ISCLK period after the ILRCK edge
1 - MSB of SDIN data occurs in the second ISCLK period after the ILRCK edge

SISPOL *- ISCLK clock polarity*

Default = '0'
0 - SDIN sampled on rising edges of ISCLK
1 - SDIN sampled on falling edges of ISCLK

SILRPOL *- ILRCK clock polarity*

Default = '0'
0 - SDIN data is for the left channel when ILRCK is high
1 - SDIN data is for the right channel when ILRCK is high

11.6 Serial Audio Output Port Data Format (06h)

7	6	5	4	3	2	1	0
SOMS	SOSF	SORES1	SORES0	SOJUST	SODEL	SOSPOL	SOLRPOL

SOMS *- Master/Slave Mode Selector*

Default = '0'
0 - Serial audio output port is in slave mode
1 - Serial audio output port is in master mode

SOSF *- OSCLK frequency (for master mode)*

Default = '0'
0 - 64 * Fso
1 - 128 * Fso

SORES1:0 *- Resolution of the output data on SDOUT and on the AES3 output*

Default = '00'

00 - 24-bit resolution

01 - 20-bit resolution

10 - 16-bit resolution

11 - Direct copy of the received NRZ data from the AES3 receiver (including C, U, and V bits, the time slot normally occupied by the P bit is used to indicate the location of the block start, SDOUT pin only, serial audio output port clock must be derived from the AES3 receiver recovered clock)

SOJUST - Justification of SDOUT data relative to OLRCK

Default = '0'

0 - Left-justified

1 - Right-justified (master mode only)

SODEL *- Delay of SDOUT data relative to OLRCK, for left-justified data formats*

Default = '0'

0 - MSB of SDOUT data occurs in the first OSCLK period after the OLRCK edge

1 - MSB of SDOUT data occurs in the second OSCLK period after the OLRCK edge

SOSPOL *- OSCLK clock polarity*

Default = '0'

0 - SDOUT transitions occur on falling edges of OSCLK

1 - SDOUT transitions occur on rising edges of OSCLK

SOLRPOL *- OLRCK clock polarity*

Default = '0'

0 - SDOUT data is for the left channel when OLRCK is high

1 - SDOUT data is for the right channel when OLRCK is high

11.7 Interrupt 1 Status (07h) (Read Only)

7	6	5	4	3	2	1	0
TSLIP	OSLIP	0	0	0	DETC	EFTC	RERR

For all bits in this register, a "1" means the associated interrupt condition has occurred at least once since the register was last read. A "0" means the associated interrupt condition has NOT occurred since the last reading of the register. Reading the register resets all bits to 0, unless the interrupt mode is set to level and the interrupt source is still true. Status bits that are masked off in the associated mask register will always be "0" in this register. This register defaults to 00h.

TSLIP *- AES3 transmitter source data slip interrupt.*

In data flows where OMCK, which clocks the AES3 transmitter, is asynchronous to the data source, this bit will go high every time a data sample is dropped or repeated. When TCBL is an input, this bit will go high on receipt of a new TCBL signal.

OSLIP *- Serial audio output port data slip interrupt.*

When the serial audio output port is in slave mode, and OLRCK is asynchronous to the port data source, this bit will go high every time a data sample is dropped or repeated.

DETC *- D to E C-buffer transfer interrupt.*

Indicates the completion of a D to E C-buffer transfer. See "Channel Status and User Data Buffer Management" on page 51 for more information.

EFTC *- E to F C-buffer transfer interrupt.*

Indicates the completion of a E to F C-buffer transfer. See "Channel Status and User Data Buffer Management" on page 51 for more information.

RERR *- A receiver error has occurred.*

The Receiver Error register may be read to determine the nature of the error which caused the interrupt.

11.8 Interrupt 2 Status (08h) (Read Only)

7	6	5	4	3	2	1	0
0	0	0	0	DETU	EFTU	QCH	0

For all bits in this register, a “1” means the associated interrupt condition has occurred at least once since the register was last read. A ”0” means the associated interrupt condition has NOT occurred since the last reading of the register. Reading the register resets all bits to 0, unless the interrupt mode is set to level and the interrupt source is still true. Status bits that are masked off in the associated mask register will always be “0” in this register. This register defaults to 00h.

DETU *- D to E U-buffer transfer interrupt. (Block Mode only)*

Indicates the completion of a D to E U-buffer transfer. See “Channel Status and User Data Buffer Management” on page 51 for more information.

EFTU *- E to F U-buffer transfer interrupt. (Block Mode only)*

Indicates the completion of a E to F U-buffer transfer. See “Channel Status and User Data Buffer Management” on page 51 for more information.

QCH *- A new block of Q-subcode data is available for reading.*

The data must be completely read within 588 AES3 frames after the interrupt occurs to avoid corruption of the data by the next block.

11.9 Interrupt 1 Mask (09h)

7	6	5	4	3	2	1	0
TSLIPM	OSLIPM	0	0	0	DETCM	EFTCM	RERRM

The bits of this register serve as a mask for the Interrupt 1 register. If a mask bit is set to 1, the error is unmasked, meaning that its occurrence will affect the INT pin and the status register. If a mask bit is set to 0, the error is masked, meaning that its occurrence will not affect the INT pin or the status register. The bit positions align with the corresponding bits in the Interrupt 1 register. This register defaults to 00h.

11.10 Interrupt 1 Mode MSB (0Ah) & Interrupt 1 Mode LSB (0Bh)

7	6	5	4	3	2	1	0
TSLIP1	OSLIP1	0	0	0	DETC1	EFTC1	RERR1
TSLIP0	OSLIP0	0	0	0	DETC0	EFTC0	RERR0

The two Interrupt Mode registers form a 2-bit code for each Interrupt Register 1 function. There are three ways to set the INT pin active in accordance with the interrupt condition. In the Rising edge active mode, the INT pin becomes active on the arrival of the interrupt condition. In the Falling edge active mode, the INT pin becomes active on the removal of the interrupt condition. In Level active mode, the INT interrupt pin becomes active during the interrupt condition. Be aware that the active level (Active High or Low) only depends on the INT[1:0] bits. These registers default to 00.

00 - Rising edge active
01 - Falling edge active
10 - Level active
11 - Reserved

11.11 Interrupt 2 Mask (0Ch)

7	6	5	4	3	2	1	0
0	0	0	0	DETUM	EFTUM	QCHM	0

The bits of this register serve as a mask for the Interrupt 2 register. If a mask bit is set to 1, the error is unmasked, meaning that its occurrence will affect the INT pin and the status register. If a mask bit is set to 0, the error is masked, meaning that its occurrence will not affect the INT pin or the status register. The bit positions align with the corresponding bits in the Interrupt 2 register. This register defaults to 00h.

11.12 Interrupt 2 Mode MSB (0Dh) & Interrupt 2 Mode LSB (0Eh)

7	6	5	4	3	2	1	0
0	0	0	0	DETU1	EFTU1	QCH1	0
0	0	0	0	DETU0	EFTU0	QCH0	0

The two Interrupt Mode registers form a 2-bit code for each Interrupt Register 1 function. There are three ways to set the INT pin active in accordance with the interrupt condition. In the Rising edge active mode, the INT pin becomes active on the arrival of the interrupt condition. In the Falling edge active mode, the INT pin becomes active on the removal of the interrupt condition. In Level active mode, the INT interrupt pin becomes active during the interrupt condition. Be aware that the active level (Active High or Low) only depends on the INT[1:0] bits. These registers default to 00.

00 - Rising edge active
01 - Falling edge active
10 - Level active
11 - Reserved

11.13 Receiver Channel Status (0Fh) (Read Only)

7	6	5	4	3	2	1	0
AUX3	AUX2	AUX1	AUX0	PRO	AUDIO	COPY	ORIG

The bits in this register can be associated with either channel A or B of the received data. The desired channel is selected with the CHS bit of the Channel Status Data Buffer Control Register.

AUX3:0 *- Incoming auxiliary data field width, as indicated by the incoming channel status bits, decoded according to IEC60958 and AES3.*

0000 - Auxiliary data is not present
0001 - Auxiliary data is 1 bit long
0010 - Auxiliary data is 2 bits long
0011 - Auxiliary data is 3 bits long
0100 - Auxiliary data is 4 bits long
0101 - Auxiliary data is 5 bits long
0110 - Auxiliary data is 6 bits long
0111 - Auxiliary data is 7 bits long
1000 - Auxiliary data is 8 bits long
1001 - 1111 Reserved

PRO *- Channel status block format indicator*

0 - Received channel status block is in consumer format
1 - Received channel status block is in professional format

$\overline{\text{AUDIO}}$ *- Audio indicator*

0 - Received data is linearly coded PCM audio

1 - Received data is not linearly coded PCM audio

COPY *- SCMS copyright indicator*

0 - Copyright asserted

1 - Copyright not asserted

If the category code is set to General in the incoming AES3 stream, copyright will always be indicated by COPY, even when the stream indicates no copyright.

ORIG *- SCMS generation indicator, decoded from the category code and the L bit.*

0 - Received data is 1st generation or higher

1 - Received data is original

Note: COPY and ORIG will both be set to 1 if the incoming data is flagged as professional, or if the receiver is not in use.

11.14 Receiver Error (10h) (Read Only)

7	6	5	4	3	2	1	0
0	QCRC	CCRC	UNLOCK	V	CONF	BIP	PAR

This register contains the AES3 receiver and PLL status bits. Unmasked bits will go high on occurrence of the error, and will stay high until the register is read. Reading the register resets all bits to 0, unless the error source is still true. Bits that are masked off in the receiver error mask register will always be 0 in this register.

QCRC - *Q-subcode data CRC error indicator. Updated on Q-subcode block boundaries*

0 - No error

1 - Error

CCRC *- Channel Status Block Cyclic Redundancy Check bit. Updated on CS block boundaries, valid in Pro mode.*

0 - No error

1 - Error

UNLOCK *- PLL lock status bit. Updated on CS block boundaries.*

0 - PLL locked

1 - PLL out of lock

V *- Received AES3 Validity bit status. Updated on sub-frame boundaries.*

0 - Data is valid and is normally linear coded PCM audio

1 - Data is invalid, or may be valid compressed audio

CONF *- Confidence bit. Updated on sub-frame boundaries.*

0 - No error

1 - Confidence error. This is the logical OR of BIP and UNLOCK.

BIP *- Bi-phase error bit. Updated on sub-frame boundaries.*

0 - No error

1 - Bi-phase error. This indicates an error in the received bi-phase coding.

PAR *- Parity bit. Updated on sub-frame boundaries.*

0 - No error

1 - Parity error

11.15 Receiver Error Mask (11h)

7	6	5	4	3	2	1	0
0	QCRCM	CCRCM	UNLOCKM	VM	CONFM	BIPM	PARM

The bits in this register serve as masks for the corresponding bits of the Receiver Error register. If a mask bit is set to 1, the error is unmasked, meaning that its occurrence will appear in the receiver error register, will affect the RERR pin, will affect the RERR interrupt, and will affect the current audio sample according to the status of the HOLD bit. If a mask bit is set to 0, the error is masked, meaning that its occurrence will not appear in the receiver error register, will not affect the RERR pin, will not affect the RERR interrupt, and will not affect the current audio sample. The CCRC and QCRC bits behave differently from the other bits: they do not affect the current audio sample even when unmasked. This register defaults to 00h.

11.16 Channel Status Data Buffer Control (12h)

7	6	5	4	3	2	1	0
0	0	BSEL	CBMR	DETCI	EFTCI	CAM	CHS

BSEL *- Selects the data buffer register addresses to contain User data or Channel Status data*

Default = '0'

0 - Data buffer address space contains Channel Status data

1 - Data buffer address space contains User data

CBMR *- Control for the first 5 bytes of channel status "E" buffer*

Default = '0'

0 - Allow D to E buffer transfers to overwrite the first 5 bytes of channel status data

1 - Prevent D to E buffer transfers from overwriting first 5 bytes of channel status data

DETCI *- D to E C-data buffer transfer inhibit bit.*

Default = '0'

0 - Allow C-data D to E buffer transfers

1 - Inhibit C-data D to E buffer transfers

EFTCI *- E to F C-data buffer transfer inhibit bit.*

Default = '0'

0 - Allow C-data E to F buffer transfers

1 - Inhibit C-data E to F buffer transfers

CAM *- C-data buffer control port access mode bit*

Default = '0'

0 - One byte mode

1 - Two byte mode

CHS *- Channel select bit*

Default = '0'

0 - Channel A information is displayed at the $\overline{\text{EMPH}}$ pin and in the receiver channel status register. Channel A information is output during control port reads when CAM is set to 0 (One Byte Mode)

1 - Channel B information is displayed at $\overline{\text{EMPH}}$ pin and in the receiver channel status register. Channel B information is output during control port reads when CAM is set to 0 (One Byte Mode)

11.17 User Data Buffer Control (13h)

7	6	5	4	3	2	1	0
0	0	0	UD	UBM1	UBM0	DETUI	EFTUI

UD *- User data pin (U) direction specifier If this bit is changed during normal operation, then always stop the CS8427 first (RUN = 0), write the new value, then start the CS8427 (RUN = 1).*

Default = '0'

0 - The U pin is an input. The U data is latched in on both rising and falling edges of OLRCK. This setting also chooses the U pin as the source for transmitted U data.

1 - The U pin is an output. The received U data is clocked out on both rising and falling edges of ILRCK. This setting also chooses the U data buffer as the source of transmitted U data.

UBM1:0 *- Sets the operating mode of the AES3 U bit manager*

Default = '00'

00 - Transmit all zeros mode

01 - Block mode

10 - Reserved

11 - Reserved

DETUI *- D to E U-data buffer transfer inhibit bit (valid in block mode only).*

Default = '0'

0 - Allow U-data D to E buffer transfers

1 - Inhibit U-data D to E buffer transfers

EFTUI *- E to F U-data buffer transfer inhibit bit (valid in block mode only).*

Default = '0'

0 - Allow U-data E to F buffer transfers

1 - Inhibit U-data E to F buffer transfer

11.18 Q-Channel Subcode Bytes 0 to 9 (14h - 1Dh) (Read Only)

The following 10 registers contain the decoded Q-channel subcode data

7	6	5	4	3	2	1	0
CONTROL	CONTROL	CONTROL	CONTROL	ADDRESS	ADDRESS	ADDRESS	ADDRESS
TRACK	TRACK	TRACK	TRACK	TRACK	TRACK	TRACK	TRACK
INDEX	INDEX	INDEX	INDEX	INDEX	INDEX	INDEX	INDEX
MINUTE	MINUTE	MINUTE	MINUTE	MINUTE	MINUTE	MINUTE	MINUTE
SECOND	SECOND	SECOND	SECOND	SECOND	SECOND	SECOND	SECOND
FRAME	FRAME	FRAME	FRAME	FRAME	FRAME	FRAME	FRAME
ZERO	ZERO	ZERO	ZERO	ZERO	ZERO	ZERO	ZERO
ABS MINUTE	ABS MINUTE	ABS MINUTE	ABS MINUTE	ABS MINUTE	ABS MINUTE	ABS MINUTE	ABS MINUTE
ABS SECOND	ABS SECOND	ABS SECOND	ABS SECOND	ABS SECOND	ABS SECOND	ABS SECOND	ABS SECOND
ABS FRAME	ABS FRAME	ABS FRAME	ABS FRAME	ABS FRAME	ABS FRAME	ABS FRAME	ABS FRAME

Each byte is LSB first with respect to the 80 Q-subcode bits Q[79:0]. Thus bit 7 of address 14h is Q[0] while bit 0 of address 14h is Q[7]. Similarly bit 0 of address 1Dh corresponds to Q[79].

11.19 OMCK/RMCK Ratio (1Eh) (Read Only)

7	6	5	4	3	2	1	0
ORR7	ORR6	ORR5	ORR4	ORR3	ORR2	ORR1	ORR0

This register allows the calculation of the incoming sample rate by the host microcontroller from the equation ORR=Fso/Fsi. The Fso is determined by OMCK, whose frequency is assumed to be 256xFso. ORR is represented as an unsigned 2-bit integer and a 6-bit fractional part. The value is meaningful only after the PLL has reached lock. For example, if the OMCK is 12.288 MHz, Fso would be 48 kHz (48 kHz = 12.288 MHz/256). Then if the input sample rate is also 48 KHz, you would get 1.0 from the ORR register. (The value from the ORR register is hexadecimal, so the actual value you will get is 40h).

If $F_{SO}/F_{SI} > 3.984375$, ORR will overflow. Once the register has overflowed, the value shown will be Fso/Fsi modulo 4. For example, if the OMCK is 36.864 MHz, Fso would be 144 kHz (144 kHz = 36.864 MHz/256). Then if the input sample rate is 32 kHz, you would get (144/32) mod 4 = 4.5 mod 4 = 0.5 from the ORR register. (The value from the ORR register is hexadecimal, so the actual value you will get is 20h).

Also, there is no hysteresis on ORR. Therefore a small amount of jitter on either clock can cause the LSB ORR[0] to oscillate.

ORR[7:6] - *Integer part of the ratio* (Integer value=ORR[7:6])

ORR[5:0] - *Fractional part of the ratio* (Fraction value=ORR[5:0]/64)

11.20 C-bit or U-bit Data Buffer (20h - 37h)

Either channel status data buffer E or user data buffer E (provided UBM bits are set to block mode) is accessible using these register addresses.

11.21 CS8427 I.D. and Version Register (7Fh) (Read Only)

7	6	5	4	3	2	1	0
ID3	ID2	ID1	ID0	VER3	VER2	VER1	VER0

ID3:0 - *ID code for the CS8427. Permanently set to 0111*

VER3:0 - *CS8427 revision level. Revision A is coded as 0001*

12. PIN DESCRIPTION - SOFTWARE MODE

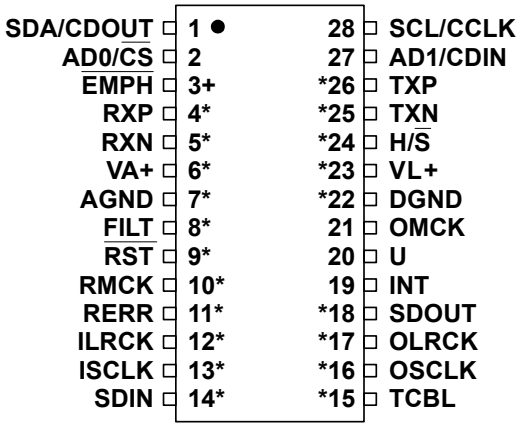

* Pins which remain the same function in all modes.
\+ Pins which require a pull up or pull down resistor to select the desired startup option.

SDA/CDOUT	1	**Serial Control Data I/O (I²C) / Data Out (SPI)** (*Input/Output*) - In I²C mode, SDA is the control I/O data line. SDA is open drain and requires an external pull-up resistor to VL+. In SPI mode, CDOUT is the output data from the control port interface on the CS8427
AD0/$\overline{CS}$	2	**Address Bit 0 (I²C) / Control Port Chip Select (SPI)** (*Input)* - A falling edge on this pin puts the CS8427 into SPI control port mode. With no falling edge, the CS8427 defaults to I²C mode. In I²C mode, AD0 is a chip address pin. In SPI mode, $\overline{CS}$ is used to enable the control port interface on the CS8427
$\overline{EMPH}$	3	**Pre-Emphasis** (*Output*) - $\overline{EMPH}$ is low when the incoming Channel Status data indicates 50/15 ms pre-emphasis. $\overline{EMPH}$ is high when the Channel Status data indicates no pre-emphasis or indicates pre-emphasis other than 50/15 ms. This is also a start-up option pin, and requires a 47 kΩ resistor to either VL+ or DGND, which determines the AD2 address bit for the control port in I²C mode
RXP **RXN**	4 5	**Differential Line Receiver** (*Input*) - Receives differential AES3 data.
VA+	6	**Positive Analog Power** (*Input*) - Positive supply for the chip's analog section. Nominally +5.0 V. This supply should be as quiet as possible since noise on this pin will directly affect the jitter performance of the recovered clock
AGND	7	**Analog Ground** (*Input*) - Ground for the analog section. AGND should be connected to the same ground as DGND
FILT	8	**PLL Loop Filter** (*Output*) - An RC network should be connected between this pin and ground. See "Appendix C: PLL Filter" on page 55 for recommended schematic and component values.
$\overline{RST}$	9	**Reset** (*Input*) - When $\overline{RST}$ is low, the CS8427 enters a low power mode and all internal states are reset. On initial power up, $\overline{RST}$ must be held low until the power supply is stable, and all input clocks are stable in frequency and phase. This is particularly true in hardware mode with multiple CS8427 devices where synchronization between devices is important
RMCK	10	**Input Section Recovered Master Clock** (*Input*/*Output*) - Input section recovered master clock output when PLL is used. Frequency defaults to 256x the sample rate (Fs) and may be set to 128x. When the PLL is bypassed by the RXD[1:0] bits in the Clock Source Control register, an external clock of 256 Fs may be applied to this pin

RERR	11	**Receiver Error** (*Output*) - When high, indicates an error condition from the AES3 receiver. The status of this pin is updated once per sub-frame of incoming AES3 data. Conditions that can cause RERR to go high are: validity, parity error, bi-phase coding error, confidence, as well as loss of lock by the PLL. Each condition may be optionally masked from affecting the RERR pin using the Receiver Error Mask Register. The RERR pin tracks the status of the unmasked errors: the pin goes high as soon as an unmasked error occurs and goes low immediately when all unmasked errors go away.
ILRCK	12	**Serial Audio Input Left/Right Clock** (*Input*/*Output*) - Word rate clock for the audio data on the SDIN pin.
ISCLK	13	**Serial Audio Bit Clock** (*Input*/*Output*) - Serial bit clock for audio data on the SDIN pin.
SDIN	14	**Serial Audio Data Port** (*Input*) - Audio data serial input pin.
TCBL	15	**Transmit Channel Status Block Start** (*Input*/*Output*) - When operated as output, TCBL is high during the first sub-frame of a transmitted channel status block, and low at all other times. When operated as input, driving TCBL high for at least three OMCK clocks will cause the next transmitted sub-frame to be the start of a channel status block.
OSCLK	16	**Serial Audio Output Bit Clock** (*Input*/*Output*) - Serial bit clock for audio data on the SDOUT pin
OLRCK	17	**Serial Audio Output Left/Right Clock** (*Input*/*Output*) - Word rate clock for the audio data on the SDOUT pin. Frequency will be the output sample rate (Fs)
SDOUT	18	**Serial Audio Output Data** (*Output*) - Audio data serial output pin
INT	19	**Interrupt** (*Output*) - Indicates errors and key events during the operation of the CS8427. All bits affecting INT may be unmasked through bits in the control registers. The condition(s) that initiated interrupt are readable through a control register. The polarity of the INT output, as well as selection of a standard or open drain output, is set through a control register. Once set true, the INT pin goes false only after the interrupt status registers have been read and the interrupt status bits have returned to zero
U	20	**User Data** (Input/*Output*) - May optionally be used to input User bit data for transmission by the AES3 transmitter, see Figure 13 on page 22 for timing information. Alternatively, the U pin may be set to output User data from the AES3 receiver, see Figure 13 on page 22 for timing information. If not driven, a 47 kΩ pull-down resistor is recommended for the U pin, since the default state of the UD direction bit sets the U pin as an input. The pull-down resistor ensures that the transmitted user data will be zero. If the U pin is always set to be an output, thereby causing the U bit manager to be the source of the U data, then the resistor is not necessary. The U pin should not be tied directly to ground, in case it is programmed to be an output, and subsequently tries to output a logic high. This situation may affect the long term reliability of the device. If the U pin is driven by a logic level output, then a 100 Ω series resistor is recommended.
OMCK	21	**System Clock** (*Input*) - When the OMCK System Clock Mode is enabled by the SWCLK bit in the Control 1 register, the clock signal input on this pin is output through RMCK. OMCK serves as reference signal for OMCK/RMCK ratio expressed in register 1Eh.
DGND	22	**Digital Ground** (*Input*) - Ground for the digital section. DGND should be connected to the same ground as AGND
VL+	23	**Positive Digital Power** (*Input*) - Typically +3.3 V or +5.0 V.
H/$\overline{S}$	24	**Hardware/Software Mode Control** (*Input*) - Determines the method of controlling the operation of the CS8427, and the method of accessing CS and U data. In software mode, device control and CS and U data access is primarily through the control port, using a microcontroller. Hardware mode provides an alternate mode of operation and access to the CS and U data through dedicated pins. This pin should be permanently tied to VL+ or DGND

TXP **TXN**	25 26	**Differential Line Driver** (*Output*) - Drivers transmit AES3 data and are pulled low while the CS8427 is in the reset state.
AD1/CDIN	27	**Address Bit 1 (I²C) / Serial Control Data in (SPI)** (*Input*) - In I²C mode, AD1 is a chip address pin. In SPI mode, CDIN is the input data line for the control port interface
SCL/CCLK	28	**Control Port Clock** (*Input*) - Serial control interface clock and is used to clock control data bits into and out of the CS8427. In I²C mode, SCL requires an external pull-up resistor to VL+

13. HARDWARE MODE DESCRIPTION

Hardware mode is selected by connecting the H/$\overline{S}$ pin to '1'. Hardware Mode data flow is shown in Figure 19. Audio data is input through the AES3 receiver, and routed to the serial audio output port. Different audio data synchronous to RMCK may be input into the serial audio input port, and output through the AES3 transmitter.

The channel status data, user data and validity bit information are handled in 2 alternative modes: A and B, determined by a start-up resistor on the COPY pin. In mode A, the received PRO, COPY, ORIG, $\overline{\text{EMPH}}$, and $\overline{\text{AUDIO}}$ channel status bits are output on pins. The transmitted channel status bits are copied from the received channel status data, and the transmitted U and V bits are 0.

In mode B, only the COPY and ORIG pins are output, and reflect the received channel status data. The transmitted channel status bits, user data and validity bits are input serially through the PRO/C, $\overline{\text{EMPH}}$/U and $\overline{\text{AUDIO}}$/V pins. Figure 13 on page 22 shows the timing requirements.

The APMS pin allows the serial audio input port to be set to master or slave.

If a validity, parity, bi-phase or lock receiver error occurs, the current audio sample is passed unmodified to the serial audio output port.

Start-up options are shown in Table 2 on page 43, and allow choice of the serial audio output port as a master or slave, whether TCBL is an input or an output, the audio serial ports formats and the source of the transmitted C, U and V data.

13.1 Serial Audio Port Formats

In hardware mode, only a limited number of alternative serial audio port formats are available. These formats are described by Table 3 on page 43 and Table 4 on page 43, which define the equivalent software mode bit settings for each format. Timing diagrams are shown in Figure 15 on page 23 and Figure 16 on page 24.

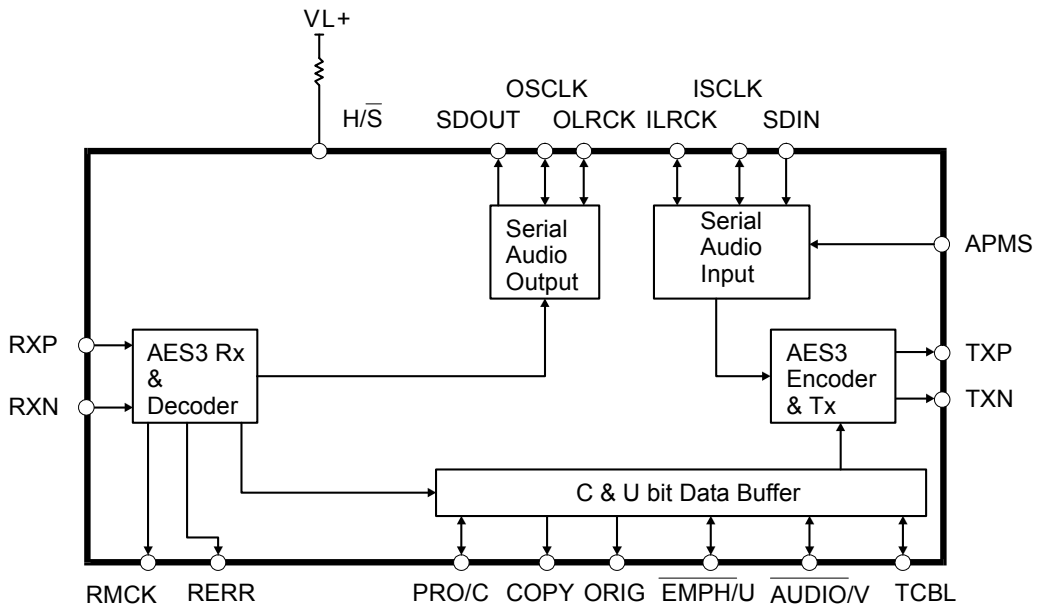

Power supply pins (VD+, VA+, DGND, AGND) & the reset pin ($\overline{\text{RST}}$) and the PLL filter pin (FILT) are omitted from this diagram. Please refer to the Typical Connection Diagram for hook-up details.

Figure 19. Hardware Mode

SDOUT	RMCK	RERR	ORIG	COPY	Function
LO	-	-	-	-	Serial Output Port is Slave
HI	-	-	-	-	Serial Output Port is Master
-	-	-	-	LO	Mode A: C transmitted data is copied from received data, U and V =0, received PRO, EMPH, AUDIO is visible
-	-	-	-	HI	Mode B: CUV transmitted data is input serially on pins, received PRO, EMPH and AUDIO is not visible
-	LO	LO	-	-	Serial Input & Output Format: Left Justified
-	LO	HI	-	-	Serial Input & Output Format: I²S
-	HI	LO	-	-	Serial Input & Output Format: Right Justified
-	HI	HI	-	-	Serial Input format: Left Justified, Output Format: AES3 Direct
-	-	-	LO	-	TCBL is an input
-	-	-	HI	-	TCBL is an output

Table 2. Hardware Mode Start-up Options

	SOSF	SORES1/0	SOJUST	SODEL	SOSPOL	SOLRPOL
OF1 - Left Justified	0	00	0	0	0	0
OF2 - I²S 24-bit data	0	00	0	1	0	1
OF3 - Right Justified, master mode only	0	00	1	0	0	0
OF4 - I²S 16 bit data	0	10	0	1	0	1
OF5 - Direct AES3 data	0	11	0	0	0	0

Table 3. Serial Audio Output Formats Available in Hardware Mode

	SISF	SIRES1/0	SIJUST	SIDEL	SISPOL	SILRPOL
IF1 - Left Justified	0	00	0	0	0	0
IF2 - I²S	0	00	0	1	0	1
IF3 - Right Justified 24-bit data	0	00	1	0	0	0
IF4 - Right Justified 16-bit data	0	10	1	0	0	0

Table 4. Serial Audio Input Formats Available in Hardware Mode

14. PIN DESCRIPTION - HARDWARE MODE

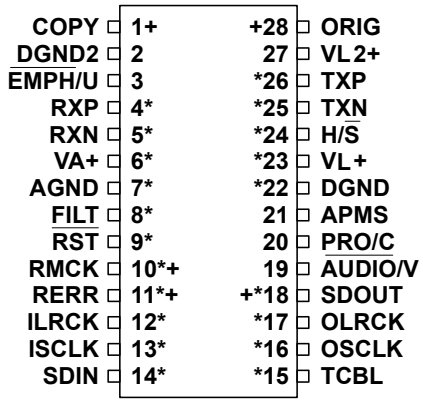

* Pins which remain the same function in all modes.
\+ Pins which require a pull up or pull down resistor to select the desired startup option.

COPY	1	**COPY Channel Status Bit** (*Output*) - Reflects the state of the Copyright Channel Status bit in the incoming AES3 data stream. If the category code is set to General, copyright will be indicated whatever the state of the Copyright bit. This is also a start-up option pin, and requires a pull-up or pull-down resistor.
DGND2 **DGND**	2 22	**Digital Ground** (*Input*) - Ground for the digital section. DGND should be connected to the same ground as AGND.
EMPH/U	3	**Pre-Emphasis Indicator / U-bit** (*Input*/*Output*) - The EMPH/U pin either reflects the state of the EMPH channel status bit in the incoming AES3 data stream, or is the serial U-bit input for the AES3 transmitted data, clocked by OLRCK. If indicating emphasis: EMPH/U is low when the incoming Channel Status data indicates 50/15 ms pre-emphasis. EMPH/U is high when the Channel Status data indicates no pre-emphasis or indicates pre-emphasis other than 50/15 ms.
RXP **RXN**	4 5	**Differential Line Receiver** (*Input*) - Receives differential AES3 data.
VA+	6	**Positive Analog Power** (*Input*) - Positive supply for the analog section. Nominally +5.0 V. This supply should be as quiet as possible since noise on this pin will directly affect the jitter performance of the recovered clock
AGND	7	**Analog Ground** (*Input*) - Ground for the analog section. AGND should be connected to the same ground as DGND
FILT	8	**PLL Loop Filter** (*Output*) - An RC network should be connected between this pin and ground. See “Appendix C: PLL Filter” on page 55 for recommended schematic and component values.
RST	9	**Reset** (*Input*) - When RST is low, the CS8427 enters a low power mode and all internal states are reset. On initial power up, RST must be held low until the power supply is stable, and all input clocks are stable in frequency and phase. This is particularly true in hardware mode with multiple CS8427 devices where synchronization between devices is important
RMCK	10	**Input Section Recovered Master Clock** (*Output*) - Input section recovered master clock output when PLL is used. Frequency is 256x the sample rate (Fs).
RERR	11	**Receiver Error** (*Output*) - When high, indicates an error in the operation of the AES3 receiver. The status of this pin is updated once per sub-frame of incoming AES3 data. Conditions that can cause RERR to go high are: parity error, bi-phase coding error, confidence, as well as loss of lock by the PLL.

ILRCK	12	**Serial Audio Input Left/Right Clock** (*Input*/*Output*) - Word rate clock for the audio data on the SDIN pin.
ISCLK	13	**Serial Audio Bit Clock** (*Input*/*Output*) - Serial bit clock for audio data on the SDIN pin.
SDIN	14	**Serial Audio Data Port** (*Input*) - Audio data serial input pin.
TCBL	15	**Transmit Channel Status Block Start** (*Input*/*Output*) - When operated as output, TCBL is high during the first sub-frame of a transmitted channel status block, and low at all other times. When operated as input, driving TCBL high for at least three OMCK clocks will cause the next transmitted sub-frame to be the start of a channel status block.
OSCLK	16	**Serial Audio Output Bit Clock** (*Input*/*Output*) - Serial bit clock for audio data on the SDOUT pin
OLRCK	17	**Serial Audio Output Left/Right Clock** (*Input*/*Output*) - Word rate clock for the audio data on the SDOUT pin. Frequency will be the output sample rate (Fs)
SDOUT	18	**Serial Audio Output Data** (*Output*) - Audio data serial output pin
$\overline{\text{AUDIO}}$/V	19	**Audio Channel Status Bit / V-Bit** (*Input*/*Output*) - Reflects either the state of the audio/non-audio Channel Status bit in the incoming AES3 data stream or is the Validity bit data input for the AES3 transmitted data stream, clocked by OLRCK.
PRO/C	20	**PRO Channel Status Bit / C-Bit** (*Input*/*Output*) - Reflects either the state of the Professional/Consumer Channel Status bit in the incoming AES3 data stream or is the serial C-bit input for the AES3 transmitted data, clocked by OLRCK.
APMS	21	**Serial Audio Input Port Master/Slave Select** (*Input*) - APMS should be connected to VL+ to set serial audio input port as a master, or connected to DGND to set the port as a slave.
VL+ **VL2+**	23 27	**Positive Digital Power** (*Input*) - Typically +3.3 V or +5.0 V.
H/$\overline{\text{S}}$	24	**Hardware/Software Mode Control** (*Input*) - Determines the method of controlling the operation of the CS8427, and the method of accessing CS and U data. In software mode, device control and CS and U data access is primarily through the control port, using a microcontroller. Hardware mode provides an alternate mode of operation and access to the CS and U data through dedicated pins. This pin should be permanently tied to VL+ or DGND
TXP **TXN**	25 26	**Differential Line Driver** (*Output*) - Drivers transmit AES3 data and are pulled low while the CS8427 is in the reset state.
ORIG	28	**ORIG Channel Status Bit** (*Output*) - SCMS generation indicator. This is decoded from the incoming category code and the L bit. A low output indicates that the source of the audio data stream is a copy. A high indicates that the source of the audio data stream is an original recording. This is also a start-up option pin, and requires a pull-up or pull-down resistor.

15. APPLICATIONS

15.1 Reset, Power Down and Start-up

When $\overline{\text{RST}}$ is low, the CS8427 enters a low power mode and all internal states are reset, including the control port and registers, and the outputs are muted. When $\overline{\text{RST}}$ is high, the control port becomes operational and the desired settings should be loaded into the control registers. Writing a 1 to the RUN bit will then cause the part to leave the low power state and begin operation. After the PLL has settled, the AES3 and serial audio outputs will be enabled.

Some options within the CS8427 are controlled by a start-up mechanism. During the reset state, some of the output pins are reconfigured internally to be inputs. Immediately upon exiting the reset state, the level of these pins is sensed. The pins are then switched to be outputs. This mechanism allows output pins to be used to set alternative modes in the CS8427 by connecting a 47 kΩ resistor to between the pin and either VL+ (HI) or DGND (LO). For each mode, every start-up option select pin MUST have an external pull-up or pull-down resistor. In software mode, the only start-up option pin is $\overline{\text{EMPH}}$, which is used to set a chip address bit for the control port in I²C mode. Hardware modes use many start-up options, which are detailed in the hardware definition section at the end of this data sheet.

15.2 ID Code and Revision Code

The CS8427 has a register that contains a four bit code to indicate that the addressed device is a CS8427. This is useful when other CS84XX family members are resident in the same system, allowing common software modules.

The CS8427 four bit revision code is also available. This allows the software driver for the CS8427 to identify which revision of the device is in a particular system, and modify its behavior accordingly. To allow for future revisions, it is strongly recommend that the revision code is read into a variable area within the microcontroller, and used wherever appropriate as revision details become known.

15.3 Power Supply, Grounding, and PCB layout

For most applications, the CS8427 can be operated from a single +5.0 V supply, following normal supply decoupling practices, see Figure 5 on page 11. Note that the I²C protocol is supported only in VL+ = 5.0 V mode. For applications where the recovered input clock, output on the RMCK pin, is required to be low jitter, then use a separate, quiet, analog +5.0 V supply for VA+, decoupled to AGND. In addition, a separate region of analog ground plane around the FILT, AGND, VA+, RXP, and RXN pins is recommended.

The VL+ supply should be well decoupled with a 0.1 µF capacitor to DGND to minimize AES3 transmitter induced transients.

Extensive use of power and ground planes, ground plane fill in unused areas and surface mount decoupling capacitors are recommended. Decoupling capacitors should be mounted on the same side of the board as the CS8427 to minimize inductance effects, and all decoupling capacitors should be as close to the CS8427 as possible.

15.4 Synchronization of Multiple CS8427s

The serial audio output ports of multiple CS8427s can be synchronized if all devices share the same master clock, OSCLK, OLRCK, and $\overline{\text{RST}}$ line and leave the reset state on the same master clock falling edge. Either all the ports need to be in slave mode, or one can be set as a master.

Multiple AES3 transmitters can be synchronized if all devices share the same master clock, TCBL, and $\overline{\text{RST}}$ signals and leave the reset state on the same master clock falling edge. The TCBL pin is used to synchronize multiple CS8427 AES3 transmitters at the channel status block boundaries. One CS8427 must have its TCBL set to master; the others must be set to slave TCBL. Alternatively, TCBL can be derived from external logic, in which case all the CS8427 devices should be set to slave TCBL.

16. PACKAGE DIMENSIONS

28L SOIC (300 MIL BODY) PACKAGE DRAWING

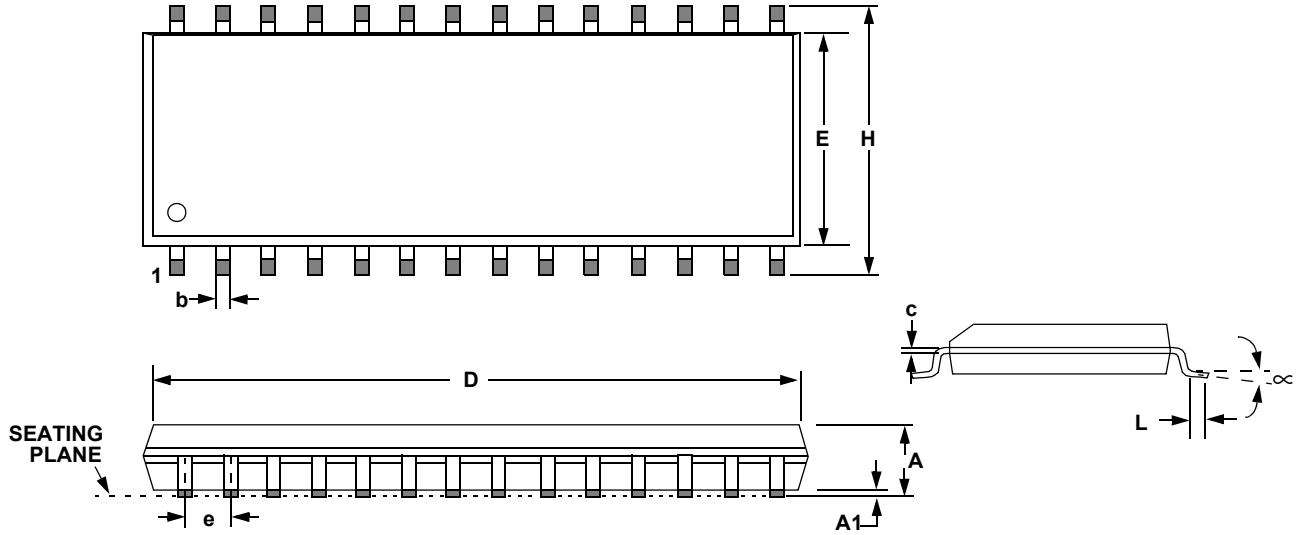

	INCHES			MILLIMETERS		
DIM	MIN	NOM	MAX	MIN	NOM	MAX
A	0.093	0.098	0.104	2.35	2.50	2.65
A1	0.004	0.008	0.012	0.10	0.20	0.30
b	0.013	0.017	0.020	0.33	0.42	0.51
C	0.009	0.011	0.013	0.23	0.28	0.32
D	0.697	0.705	0.713	17.70	17.90	18.10
E	0.291	0.295	0.299	7.40	7.50	7.60
e	0.040	0.050	0.060	1.02	1.27	1.52
H	0.394	0.407	0.419	10.00	10.34	10.65
L	0.016	0.026	0.050	0.40	0.65	1.27
∝	0°	4°	8°	0°	4°	8°

JEDEC #: MS-013

Controlling Dimension is Millimeters

28L TSSOP (4.4 mm BODY) PACKAGE DRAWING

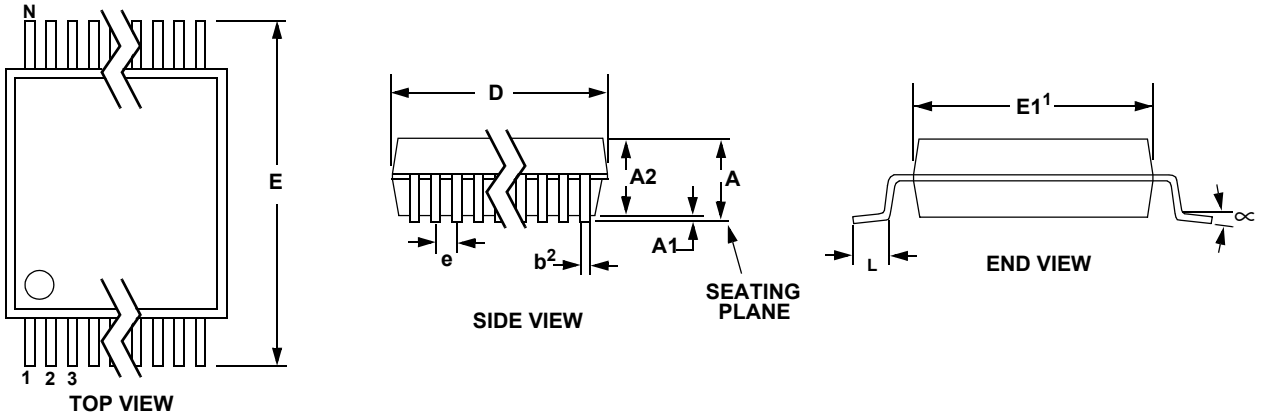

	INCHES			MILLIMETERS			NOTE
DIM	MIN	NOM	MAX	MIN	NOM	MAX	
A	--	--	0.47	--	--	1.20	
A1	0.002	0.004	0.006	0.05	0.10	0.15	
A2	0.03150	0.035	0.04	0.80	0.90	1.00	
b	0.00748	0.0096	0.012	0.19	0.245	0.30	2,3
D	0.378 BSC	0.382 BSC	0.386 BSC	9.60 BSC	9.70 BSC	9.80 BSC	1
E	0.248	0.2519	0.256	6.30	6.40	6.50	
E1	0.169	0.1732	0.177	4.30	4.40	4.50	1
e	--	0.026 BSC	--	--	0.65 BSC	--	
L	0.020	0.024	0.029	0.50	0.60	0.75	
∝	0°	4°	8°	0°	4°	8°	

JEDEC #: MO-153
Controlling Dimension is Millimeters.

Notes:
1. "D" and "E1" are reference datums and do not included mold flash or protrusions, but do include mold mismatch and are measured at the parting line, mold flash or protrusions shall not exceed 0.20 mm per side.
2. Dimension "b" does not include dambar protrusion/intrusion. Allowable dambar protrusion shall be 0.13 mm total in excess of "b" dimension at maximum material condition. Dambar intrusion shall not reduce dimension "b" by more than 0.07 mm at least material condition.
3. These dimensions apply to the flat section of the lead between 0.10 and 0.25 mm from lead tips.

17. ORDERING INFORMATION

Product	Description	Package	Pb-Free	Grade	Temp Range	Container	Order #
CS8427	96 kHz Digital Audio Interface Transceiver	28-pin SOIC	YES	Commercial	-10 to +70°C	Rail	CS8427-CSZ
						Tape & Reel	CS8427-CSZR
		28-pin TSSOP				Rail	CS8427-CZZ
						Tape & Reel	CS8427-CZZR
				Automotive	-40 to +85°C	Rail	CS8427-DZZ
						Tape & Reel	CS8427-DZZR
CDB8427	CS8427 Evaluation Board		-	-	-	-	CDB8427

18. APPENDIX A: EXTERNAL AES3/SPDIF/IEC60958 TRANSMITTER AND RECEIVER COMPONENTS

This section details the external components required to interface the AES3 transmitter and receiver to cables and fiber-optic components.

18.1 AES3 Transmitter External Components

The output drivers on the CS8427 are designed to drive both the professional and consumer interfaces. The AES3 specification for professional/broadcast use calls for a 110 Ω source impedance and a balanced drive capability. Since the transmitter output impedance is very low, a 110 Ω resistor should be placed in series with one of the transmit pins. The specifications call for a balanced output drive of 2-7 V peak-to-peak into a 110 Ω load with no cable attached. Using the circuit in Figure 20, the output of the transformer is short-circuit protected, has the proper source impedance, and provides a 5 V peak-to-peak signal into a 110 Ω load. Lastly, the two output pins should be attached to an XLR connector with male pins and a female shell, and with pin 1 of the connector grounded.

In the case of consumer use, the IEC60958 specifications call for an unbalanced drive circuit with an output impedance of 75 Ω and a output drive level of 0.5 V peak-to-peak ±20% when measured across a 75 Ω load using no cable. The circuit shown in Figure 21 only uses the TXP pin and provides the proper output impedance and drive level using standard 1% resistors. If VL+ is driven from +3.3 V, use resistor values of 243 Ω and 107 Ω. The connector for a consumer application would be an RCA phono socket. This circuit is also short circuit protected.

The TXP pin may be used to drive TTL or CMOS gates as shown in Figure 22. This circuit may be used for optical connectors for digital audio since they usually have TTL or CMOS compatible inputs. This circuit is also useful when driving multiple digital audio outputs since RS422 line drivers have TTL compatible inputs.

18.2 Isolating Transformer Requirements

Please refer to the application note AN134: *AES and SPDIF Recommended Transformers* for resources on transformer selection.

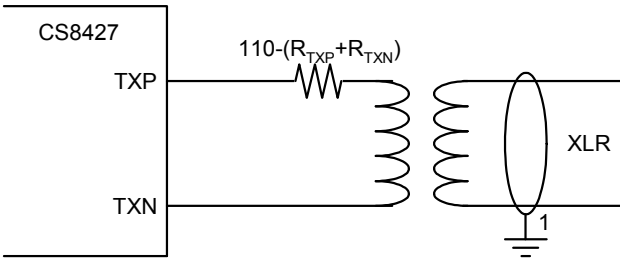

Figure 20. Professional Output Circuit

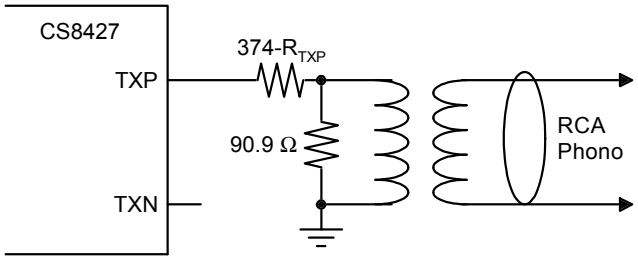

Figure 21. Consumer Output Circuit

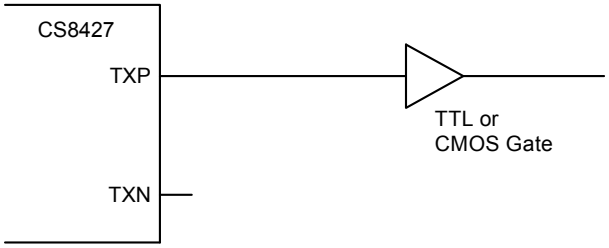

Figure 22. TTL/CMOS Output Circuit

18.3 AES3 Receiver External Components

The CS8427 AES3 receiver is designed to accept both the professional and consumer interfaces. The digital audio specifications for professional use call for a balanced receiver, using XLR connectors, with 110 Ω ±20% impedance. The XLR connector on the receiver should have female pins with a male shell. Since the receiver has a very high input impedance, a 110 Ω resistor should be placed across the receiver terminals to match the line impedance, as shown in Figure 23. Although transformers are not required by the AES, they are, however, strongly recommended.

If some isolation is desired without the use of transformers, a 0.01 µF capacitor should be placed in series with each input pin (RXP and RXN) as shown in Figure 24. However, if a transformer is not used, high frequency energy could be coupled into the receiver, causing degradation in analog performance.

Figure 23 and Figure 24 show an optional DC blocking capacitor (0.1 µF to 0.47 µF) in series with the cable input. This improves the robustness of the receiver, preventing the saturation of the transformer, or any DC current flow, if a DC voltage is present on the cable.

In the configuration of systems, it is important to avoid ground loops and DC current flowing down the shield of the cable that could result when boxes with different ground potentials are connected. Generally, it is good practice to ground the shield to the chassis of the transmitting unit, and connect the shield through a capacitor to chassis ground at the receiver. However, in some cases it is advantageous to have the ground of two boxes held to the same potential, and the cable shield might be depended upon to make that electrical connection. Generally, it may be a good idea to provide the option of grounding or capacitively coupling the shield to the chassis.

In the case of the consumer interface, the standards call for an unbalanced circuit having a receiver impedance of 75 Ω ±5%. The connector for the consumer interface is an RCA phono socket. The receiver circuit for the consumer interface is shown in Figure 25.

The circuit shown in Figure 26 may be used when external RS422 receivers, optical receivers or other TTL/CMOS logic outputs drive the CS8427 receiver section.

18.4 Isolating Transformer Requirements

Please refer to the application note AN134: “AES and SPDIF Recommended Transformers” for resources on transformer selection

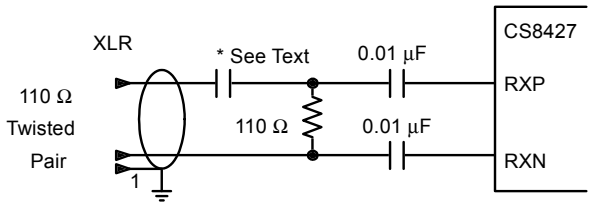

Figure 23. Professional Input Circuit

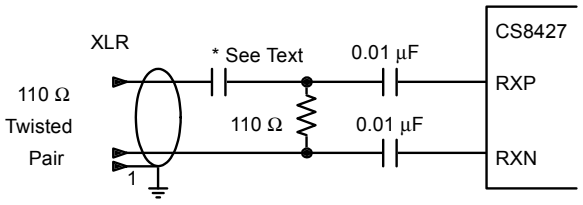

Figure 24. Transformerless Professional Input Circuit

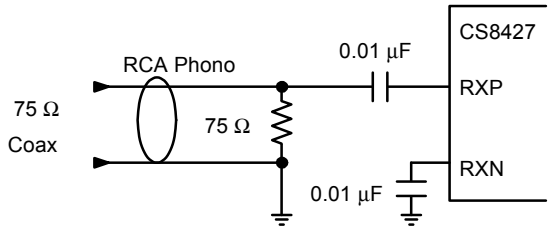

Figure 25. Consumer Input Circuit

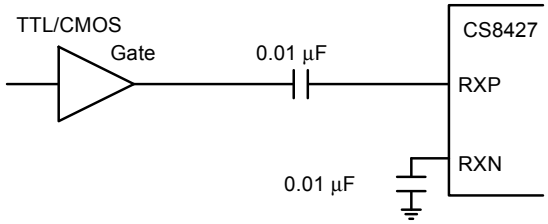

Figure 26. TTL/CMOS Input Circuit

19. APPENDIX B: CHANNEL STATUS AND USER DATA BUFFER MANAGEMENT

The CS8427 has a comprehensive channel status (C) and user (U) data buffering scheme, which allows automatic management of channel status blocks and user data. Alternatively, sufficient control and access is provided to allow the user to completely manage the C and U data through the control port. Be aware that the RUN bit should be set to 1 in order to access the C and U data buffer through the control port.

19.1 AES3 Channel Status(C) Bit Management

The CS8427 contains sufficient RAM to store a full block of C data for both A and B channels (192x2 = 384 bits), and also 384 bits of U information. The user may read from or write to these RAMs through the control port.

The CS8427 manages the flow of channel status data at the block level, meaning that entire blocks of channel status information are buffered at the input, synchronized to the output timebase, and then transmitted. The buffering scheme involves a cascade of 3 block-sized buffers, named D,E and F, as shown in Figure 27. The MSB of each byte represents the first bit in the serial C data stream. For example, the MSB of byte 0 (which is at control port address 20h) is the consumer/professional bit for channel status block A.

The first buffer, D, accepts incoming C data from the AES receiver. The 2nd buffer, E, accepts entire blocks of data from the D buffer. The E buffer is also accessible from the control port, allowing read and writing of the C data. The 3rd buffer (F) is used as the source of C data for the AES3 transmitter. The F buffer accepts block transfers from the E buffer.

19.1.1 Manually accessing the E buffer

The user can monitor the data being transferred by reading the E buffer, which is mapped into the register space of the CS8427, through the control port. The user can modify the data to be transmitted by writing to the E buffer.

The user can configure the interrupt enable register to cause interrupts to occur whenever “D to E” or “E to F” buffer transfers occur. This allows determination of the allowable time periods to interact with the E buffer.

Also provided are “D to E” and “E to F” inhibit bits. The associated buffer transfer is disabled whenever the user sets these bits. These may be used whenever “long” control port interactions are occurring. They can also be used to align the behavior of the buffers with the selected audio data flow. For example, if the audio data flow is serial port in to AES3 out, then it is necessary to inhibit “D toE” transfers, since these would overwrite the desired transmit C data with invalid data.

Flowcharts for reading and writing to the E buffer are shown in Figure 28 and Figure 29. For reading, since a D to E interrupt just occurred, then there a substantial time interval until the next D to E transfer (approximately 24 frames worth of time). This is usually plenty of time to access the E data without having to inhibit the next transfer.

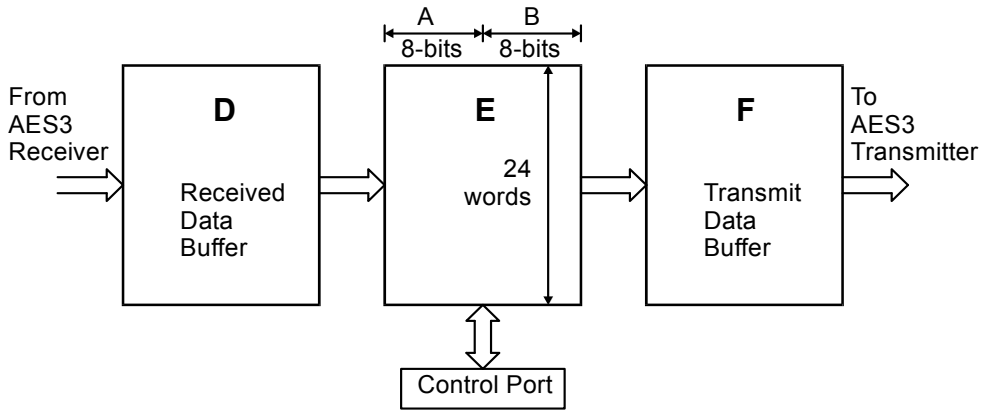

Figure 27. Channel Status Data Buffer Structure

For writing, the sequence starts after a E to F transfer, which is based on the output timebase. Since a D to E transfer could occur at any time (this is based on the input timebase), then it is important to inhibit D to E transfers while writing to the E buffer until all writes are complete. Then wait until the next E to F transfer occurs before enabling D to E transfers. This ensures that the data written to the E buffer actually gets transmitted and not overwritten by a D to E transfer.

If the channel status block to transmit indicates PRO mode, then the CRCC byte is automatically calculated by the CS8427, and does not have to be written into the last byte of the block by the host microcontroller.

19.1.2 Reserving the first 5 bytes in the E buffer

D to E buffer transfers periodically overwrite the data stored in the E buffer. This can be a problem for users who want to transmit certain channel status settings which are different from the incoming settings. In this case, the user would have to superimpose his settings on the E buffer after every D to E overwrite.

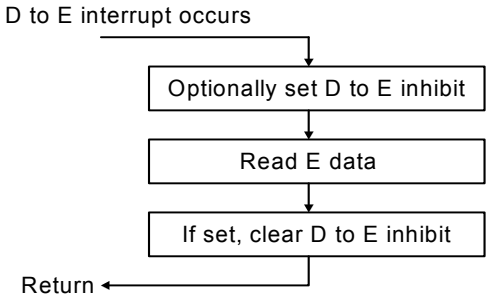

Figure 28. Flowchart for Reading the E Buffer

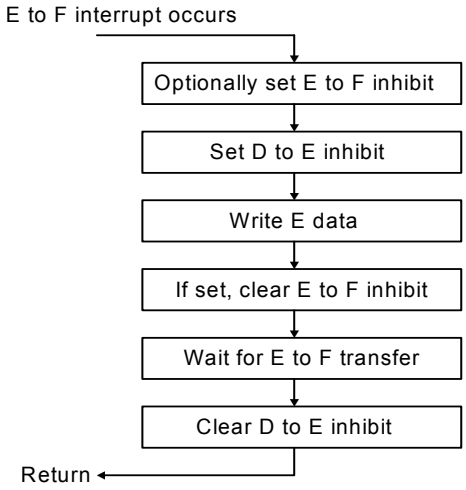

Figure 29. Flowchart for Writing the E Buffer

To avoid this problem, the CS8427 has the capability of reserving the first 5 bytes of the E buffer for user writes only. When this capability is in use, internal D to E buffer transfers will NOT affect the first 5 bytes of the E buffer. Therefore, the user can set values in these first 5 E bytes once, and the settings will persist until the next user change. This mode is enabled by the Channel Status Data Buffer Control register.

19.1.3 Serial Copy Management System (SCMS)

In software mode, the CS8427 allows read/modify/write access to all the channel status bits. For consumer mode SCMS compliance, the host microcontroller needs to read and manipulate the Category Code, Copy bit and L bit appropriately.

In hardware mode, the SCMS protocol can be followed by either using the COPY and ORIG input pins, or by using the C bit serial input pin. These options are documented in the hardware mode section of this data sheet.

19.1.4 Channel Status Data E Buffer Access

The E buffer is organized as 24 x 16-bit words. For each word the MS Byte is the A channel data, and the LS Byte is the B channel data (see Figure 27).

There are two methods of accessing this memory, known as one byte mode and two byte mode. The desired mode is selected through a control register bit.

One Byte Mode

In many applications, the channel status blocks for the A and B channels will be identical. In this situation, if the user reads a byte from one of the channel's blocks, the corresponding byte for the other channel will be the same. Similarly, if the user wrote a byte to one channel's block, it would be necessary to write the same byte to the other block. One byte mode takes advantage of the often identical nature of A and B channel status data.

When reading data in one byte mode, a single byte is returned, which can be from channel A or B data, depending on a register control bit. If a write is being done, the CS8427 expects a single byte to be input to its control port. This byte will be written to both the A and B locations in the addressed word.

One byte mode saves the user substantial control port access time, as it effectively accesses 2 bytes worth of information in 1 byte's worth of access time. If the control port's autoincrement addressing is used in combination with this mode, multi-byte accesses such as full-block reads or writes can be done especially efficiently.

Two Byte mode

There are those applications in which the A and B channel status blocks will not be the same, and the user is interested in accessing both blocks. In these situations, two byte mode should be used to access the E buffer.

In this mode, a read will cause the CS8427 to output two bytes from its control port. The first byte out will represent the A channel status data, and the 2nd byte will represent the B channel status data. Writing is similar, in that two bytes must now be input to the CS8427's control port. The A channel status data is first, B channel status data second.

19.2 AES3 User (U) Bit Management

The CS8427 U bit manager has two operating modes: transmit all zeros and block mode.

19.2.1 Mode 1: Transmit All Zeros

Mode 1 causes only zeros to be transmitted in the output U data, regardless of E buffer contents or U data embedded in an input AES3 data stream. This mode is intended for the user who does not want to transceive U data, and simply wants the output U channel to contain no data.

19.2.2 Mode 2: Block Mode

Mode 2 is very similar to the scheme used to control the C bits. Entire blocks of U data are buffered from input to output, using a cascade of 3 block-sized RAMs to perform the buffering. The user has access to the second of these 3 buffers, denoted the E buffer, through the control port. Block mode is designed for use in AES3 in, AES3 out situations in which input U data is decoded using a microcontroller through the control port. It is also the only mode in which the user can merge his own U data into the transmitted AES3 data stream.

The U buffer access only operates in two byte mode, since there is no concept of A and B blocks for user data. The arrangement of the data is as follows:Bit15[A7]Bit14[B7]Bit13[A6]Bit12[B6]...Bit1[A0]Bit0[B0]. The arrangement of the data in the each byte is that the MSB is the first received bit and is the first transmitted bit. The first byte read is the first byte received, and the first byte sent is the first byte transmitted. If you read two bytes from the E buffer, you will get the following arrangement: A[7]B[7]A[6]B[6]....A[0]B[0].

20. APPENDIX C: PLL FILTER

20.1 General

An on-chip Phase Locked Loop (PLL) is used to recover the clock from the incoming data stream. Figure 30 is a simplified diagram of the PLL in these parts. When the PLL is locked to an AES3 input stream, it is updated at each preamble in the AES3 stream. This occurs at twice the sampling frequency, F_S. When the PLL is locked to ILRCK, it is updated at F_S so that the duty cycle of the input doesn't affect jitter.

There are some applications where low jitter in the recovered clock, presented on the RMCK pin, is important. For this reason, the PLL has been designed to have good jitter attenuation characteristics, as shown in Figure 33, Figure 34, Figure 35, and Figure 36. In addition, the PLL has been designed to only use the preambles of the AES3 stream to provide lock update information to the PLL. This results in the PLL being immune to data dependent jitter affects because the AES3 preambles do not vary with the data.

The PLL has the ability to lock onto a wide range of input sample rates with no external component changes. If the sample rate of the input subsequently changes, for example in a varispeed application, the PLL will only track up to ±12.5% from the nominal center sample rate. The nominal center sample rate is the sample rate that the PLL first locks onto upon application of an AES3 data stream or after enabling the CS8427 clocks by setting the RUN control bit. If the 12.5% sample rate limit is exceeded, the PLL will return to its wide lock range mode and re-acquire a new nominal center sample rate.

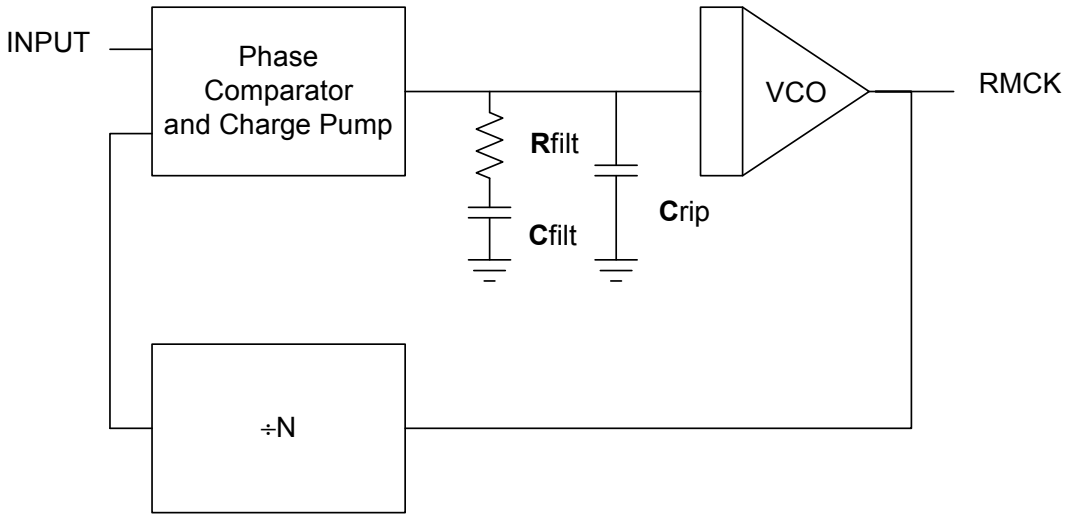

Figure 30. PLL Block Diagram

20.2 External Filter Components

20.2.1 General

The PLL behavior is affected by the external filter component values. Figure 5 on page 11 shows the recommended configuration of the two capacitors and one resistor that comprise the PLL filter. In Table 7 and Table 8, the component values shown for the 32 to 96 kHz range have the highest corner frequency jitter attenuation curve, takes the shortest time to lock, and offers the best output jitter performance. The component values shown in Table 6 and Table 8 for the 8 to 96 kHz range allows the lowest input sample rate to be 8 kHz, and increases the lock time of the PLL. Lock times are worst case for an Fsi transition of 96 kHz.

20.2.2 Capacitor Selection

The type of capacitors used for the PLL filter can have a significant effect on receiver performance. Large or exotic film capacitors are not necessary as their leads and the required longer circuit board traces add undesirable inductance to the circuit. Surface mount ceramic capacitors are a good choice because their own inductance is low, and they can be mounted close to the FILT pin to minimize trace inductance. For C_{RIP}, a C0G or NPO dielectric is recommended, and for C_{FILT}, an X7R dielectric is preferred. Avoid capacitors with large temperature coefficients, or capacitors with high dielectric constants, that are sensitive to shock and vibration. These include the Z5U and Y5V dielectrics.

20.2.3 Circuit Board Layout

Board layout and capacitor choice affect each other and determine the performance of the PLL. Figure 31 contains a suggested layout for the PLL filter components and for bypassing the analog supply voltage. The 0.1 µF bypass capacitor is in a 1206 form factor. R_{FILT} and the other three capacitors are in an 0805 form factor. The traces are on the top surface of the board with the IC so that there is no via inductance. The traces themselves are short to minimize the inductance in the filter path. The VA+ and AGND traces extend back to their origin and are shown only in truncated form in the drawing.

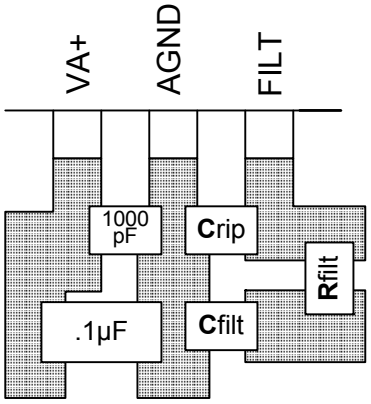

Figure 31. Recommended Layout Example

20.3 Component Value Selection

When transitioning from one revision of the part another, component values may need to be changed. While it is mandatory for customers to change the external PLL component values when transitioning from revision A to revision A1 or from revision A to revision A2, customers do not need to change external PLL component values when transitioning from revision A1 to revision A2, unless the part is used in an application that is required to pass the AES3 or IEC60958-4 specification for receiver jitter tolerance (see Table 7).

20.3.1 Identifying the Part Revision

The first line of the part marking on the package indicates the part number and package type (CS8427-xx). Table 5 shows a list of part revisions and their corresponding second line part marking, which indicates what revision the part is.

Revision	Pre-October 2002 SOIC & TSSOP (10-Digit)	New SOIC (12-Digit)	New TSSOP (10-Digit)
A	Zxxxxxxxxx	ZFBAAXxxxxxx	NAAXxxxxxx
A1	Rxxxxxxxxx	RFBAA1xxxxxx	NAA1xxxxxx
A2	N/A	RFBAA2xxxxxx	NAA2xxxxxx

Table 5. Second Line Part Marking

20.3.2 Locking to the RXP/RXN Receiver Inputs

CS8427 parts that are configured to lock to only the RXP/RXN receiver inputs should use the external PLL component values listed in Table 6 and Table 7. Values listed for the 32 to 96 kHz Fs range will have the highest corner frequency jitter attenuation curve, take the shortest time to lock, and offer the best output jitter performance.

Revision	R_{FILT} (kΩ)	C_{FILT} (µF)	C_{RIP} (nF)	PLL Lock Time (ms)
A	0.909	1.8	33	56
A1	0.4	0.47	47	60
A2	0.4	0.47	47	60

Table 6. Locking to RXP/RXN - Fs = 8 to 96 kHz

Revision	R_{FILT} (kΩ)	C_{FILT} (µF)	C_{RIP} (nF)	PLL Lock Time (ms)
A*	3.0	0.047	2.2	35
A1*	1.2	0.1	4.7	35
A2	1.2	0.1	4.7	35
A2*	1.6	0.33	4.7	35

Table 7. Locking to RXP/RXN - Fs = 32 to 96 kHz

** Parts used in applications that are required to pass the AES3 or IEC60958-4 specification for receiver jitter tolerance should use these component values. Please note that the AES3 and IEC60958 specifications do not have allowances for locking to sample rates less than 32 kHz or for locking to the ILRCK input. Also note that many factors can affect jitter performance in a system. Please follow the circuit and layout recommendations outlined previously.*

20.3.3 Locking to the ILRCK Input

CS8427 parts that are configured to lock to the ILRCK input should use the external PLL component values listed in Table 8. **Note that parts that need to lock to both ILRCK and RXP/RXN should use these values.** Values listed for the 32 to 96 kHz Fs range will have the highest corner frequency jitter attenuation curve, take the shortest time to lock, and offer the best output jitter performance.

Revision	Fs Range (kHz)	R_{FILT} (kΩ)	C_{FILT} (µF)	C_{RIP} (nF)	PLL Lock Time (ms)
A	8 to 96	1.3	2.7	62	120
A	32-96	5.1	0.15	3.9	70
A1/A2	8 to 96	0.3	1.0	100	120
A1/A2	32-96	0.6	0.22	22	70

Table 8. Locking to the ILRCK Input

20.3.4 Jitter Tolerance

Shown in Figure 32 is the Receiver Jitter Tolerance template as illustrated in the AES3 and IEC60958-4 specification. CS8427 parts used with the appropriate external PLL component values (as noted in Table 7) have been tested to pass this template.

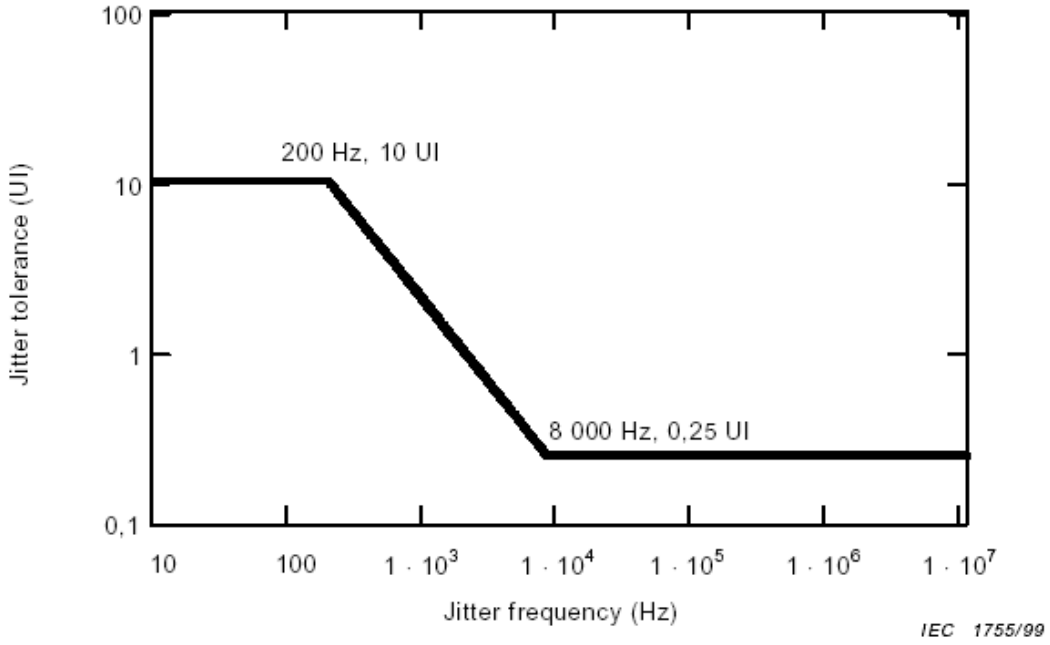

Figure 32. Jitter Tolerance Template

20.3.5 Jitter Attenuation

Shown in Figure 33, Figure 34, Figure 35, and Figure 36 are jitter attenuation plots for the various revisions of the CS8427 when used with the appropriate external PLL component values (as noted in Table 7). The AES3 and IEC60958-4 specifications do not have allowances for locking to sample rates less than 32 kHz or for locking to the ILRCK input. These specifications state a maximum of 2 dB jitter gain or peaking.

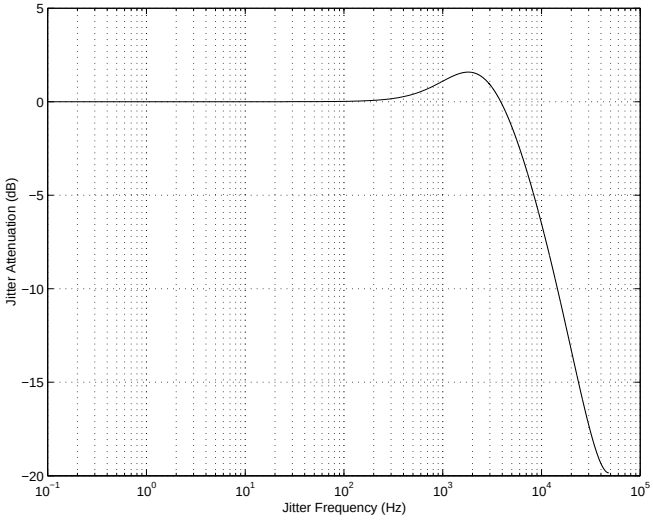

Figure 33. Revision A

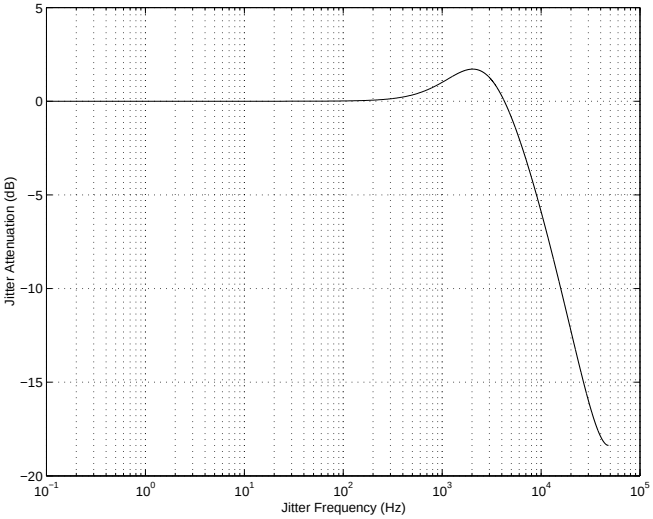

Figure 34. Revision A1

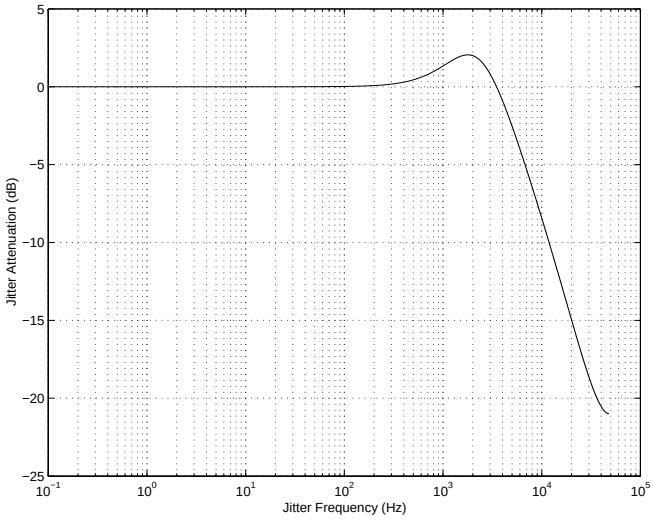

Figure 35. Revision A2 using A1 values

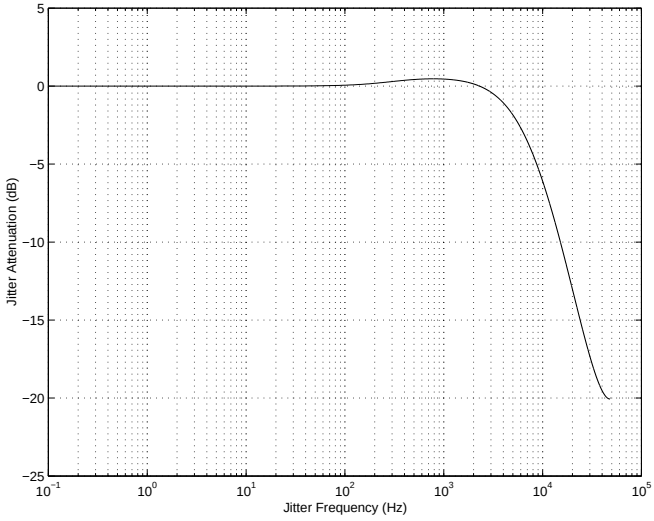

Figure 36. Revision A2 using A2* values

21. REVISION HISTORY

Release	Date	Changes
PP1	November 1999	1st Preliminary Release
PP2	November 2000	2nd Preliminary Release
PP3	May 2001	3rd Preliminary Release
PP4	February 2003	4th Preliminary Release
F1	January 2004	Final Release Updated “Appendix C: PLL Filter” on page 55 to include information from errata ER477E2
F2	July 2004	Add lead free ordering information
F3	January 2005	-Changed format of Figures 15 and 16 on page 23 and page 24. -Corrected AES3 Direct format in figure 16 on page 24 and text reference to AES3 Direct format on page 15. -Changed description of DETC, EFTC, DETU, and EFTU bits in “Control Port Register Bit Definitions” on page 32 and page 33.
F4	October 2009	Updated and moved “Ordering Information” on page 49
F5	May 2010	Updated description in “OMCK/RMCK Ratio (1Eh) (Read Only)” on page 38

Table 9. Revision History

Contacting Cirrus Logic Support

For all product questions and inquiries contact a Cirrus Logic Sales Representative.

To find the one nearest to you go to **www.cirrus.com**

IMPORTANT NOTICE

Cirrus Logic, Inc. and its subsidiaries (“Cirrus”) believe that the information contained in this document is accurate and reliable. However, the information is subject to change without notice and is provided “AS IS” without warranty of any kind (express or implied). Customers are advised to obtain the latest version of relevant information to verify, before placing orders, that information being relied on is current and complete. All products are sold subject to the terms and conditions of sale supplied at the time of order acknowledgment, including those pertaining to warranty, indemnification, and limitation of liability. No responsibility is assumed by Cirrus for the use of this information, including use of this information as the basis for manufacture or sale of any items, or for infringement of patents or other rights of third parties. This document is the property of Cirrus and by furnishing this information, Cirrus grants no license, express or implied under any patents, mask work rights, copyrights, trademarks, trade secrets or other intellectual property rights. Cirrus owns the copyrights associated with the information contained herein and gives consent for copies to be made of the information only for use within your organization with respect to Cirrus integrated circuits or other products of Cirrus. This consent does not extend to other copying such as copying for general distribution, advertising or promotional purposes, or for creating any work for resale.

CERTAIN APPLICATIONS USING SEMICONDUCTOR PRODUCTS MAY INVOLVE POTENTIAL RISKS OF DEATH, PERSONAL INJURY, OR SEVERE PROPERTY OR ENVIRONMENTAL DAMAGE (“CRITICAL APPLICATIONS”). CIRRUS PRODUCTS ARE NOT DESIGNED, AUTHORIZED OR WARRANTED FOR USE IN PRODUCTS SURGICALLY IMPLANTED INTO THE BODY, AUTOMOTIVE SAFETY OR SECURITY DEVICES, LIFE SUPPORT PRODUCTS OR OTHER CRITICAL APPLICATIONS. INCLUSION OF CIRRUS PRODUCTS IN SUCH APPLICATIONS IS UNDERSTOOD TO BE FULLY AT THE CUSTOMER'S RISK AND CIRRUS DISCLAIMS AND MAKES NO WARRANTY, EXPRESS, STATUTORY OR IMPLIED, INCLUDING THE IMPLIED WARRANTIES OF MERCHANTABILITY AND FITNESS FOR PARTICULAR PURPOSE, WITH REGARD TO ANY CIRRUS PRODUCT THAT IS USED IN SUCH A MANNER. IF THE CUSTOMER OR CUSTOMER'S CUSTOMER USES OR PERMITS THE USE OF CIRRUS PRODUCTS IN CRITICAL APPLICATIONS, CUSTOMER AGREES, BY SUCH USE, TO FULLY INDEMNIFY CIRRUS, ITS OFFICERS, DIRECTORS, EMPLOYEES, DISTRIBUTORS AND OTHER AGENTS FROM ANY AND ALL LIABILITY, INCLUDING ATTORNEYS' FEES AND COSTS, THAT MAY RESULT FROM OR ARISE IN CONNECTION WITH THESE USES.

Cirrus Logic, Cirrus, and the Cirrus Logic logo designs are trademarks of Cirrus Logic, Inc. All other brand and product names in this document may be trademarks or service marks of their respective owners.

SPI is a trademark of Motorola Inc.

AC-3 is a registered trademark of Dolby Laboratories Licensing, Inc.