CS5323

Three-Phase Buck Controller with 5-Bit DAC

The CS5323 is a three–phase step down controller that incorporates all control functions required to power next generation processors. Proprietary multi–phase architecture guarantees balanced load current distribution and reduces overall solution cost in high current applications. Enhanced V^{2}™ control architecture provides the fastest possible transient response, excellent overall regulation, and ease of use.

The multi–phase architecture reduces input and output filter ripple, allowing for a reduction in filter size and inductor values with a corresponding increase in the output inductor current slew rate.

Features

- Enhanced V^2 Control Method
- 5–Bit DAC with 1.0% Tolerance
- Adjustable Output Voltage Positioning
- Programmable Frequency Set by Single Resistor
- 200 kHz to 800 kHz Operation (Per Phase)
- Current Sensed through Sense Resistors, or Buck Inductors
- Adjustable Current Sense Threshold
- Hiccup Mode Current Limit
- Over–Voltage Protection through Synchronous MOSFET's
- Individual Current Limits for Each Phase
- On–Board Current Sense Amplifiers
- 3.3 V, 1.0 mA Reference Output
- 5.0 V and/or 12 V Operation
- On/Off Control (through COMP Pin)

ON Semiconductor®

http://onsemi.com

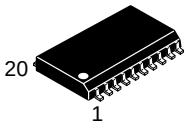

SO–20L
DW SUFFIX
CASE 751D

PIN CONNECTIONS AND MARKING DIAGRAM

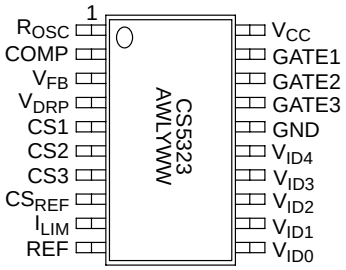

A = Assembly Location
WL, L = Wafer Lot
YY, Y = Year
WW, W = Work Week

ORDERING INFORMATION

Device	Package	Shipping
CS5323GDW20	SO–20L	37 Units/Rail
CS5323GDWR20	SO–20L	1000 Tape & Reel

© Semiconductor Components Industries, LLC, 2002

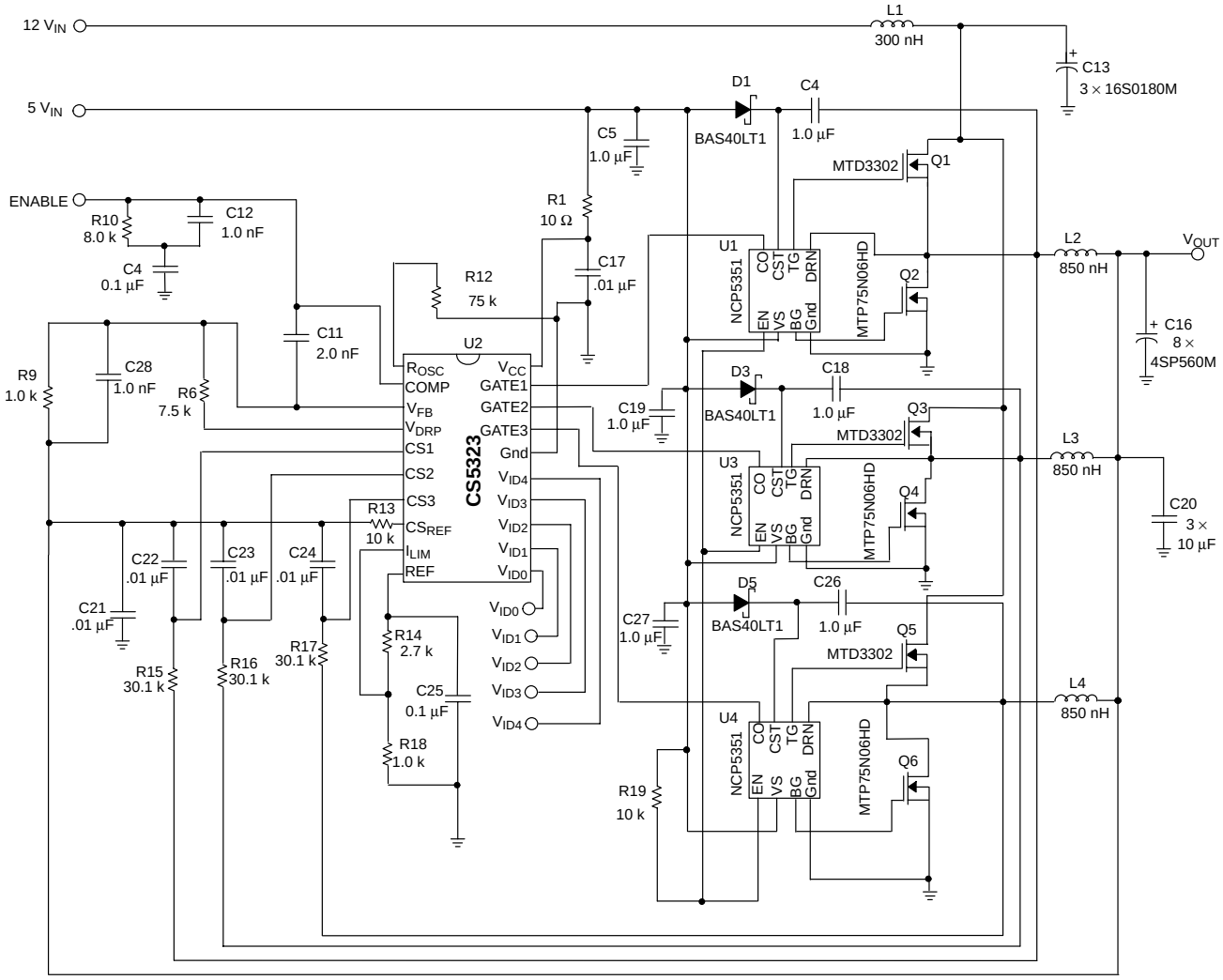

Figure 1. Application Diagram, 12 V to 1.7 V Converter

MAXIMUM RATINGS*

Rating	Value	Unit
Operating Junction Temperature	150	°C
Lead Temperature Soldering: Reflow: (SMD styles only) (Note 1)	230 peak	°C
Storage Temperature Range	–65 to +150	°C
ESD Susceptibility (Human Body Model)	2.0	kV

1. 60 second maximum above 183°C.

*The maximum package power dissipation must be observed.

MAXIMUM RATINGS

Pin Number	Pin Symbol	V_{MAX}	V_{MIN}	I_{SOURCE}	I_{SINK}
1	R_{OSC}	6.0 V	–0.3 V	1.0 mA	1.0 mA
2	COMP	6.0 V	–0.3 V	1.0 mA	1.0 mA
3	V_{FB}	6.0 V	–0.3 V	1.0 mA	1.0 mA
4	V_{DRP}	6.0 V	–0.3 V	1.0 mA	1.0 mA
5–7	CS1–CS3	6.0 V	–0.3 V	1.0 mA	1.0 mA
8	CS_{REF}	6.0 V	–0.3 V	1.0 mA	1.0 mA
9	I_{LIM}	6.0 V	–0.3 V	1.0 mA	1.0 mA
10	REF	6.0 V	–0.3 V	1.0 mA	50 mA
11–15	VID0–4	6.0 V	–0.3 V	1.0 mA	1.0 mA
16	Gnd	0 V	0 V	0.4 A, 1.0 μs, 100 mA DC	N/A
17–19	GATE 1–3	16 V	–0.3 V	0.1 A, 1.0 μs, 25 mA DC	0.1 A, 1.0 μs, 25 mA DC
20	V_{CC}	16 V	–0.3 V	N/A	0.4 A, 1.0 μs, 100 mA DC

ELECTRICAL CHARACTERISTICS (0°C < T_A < 70°C; 0°C < T_J < 85°C; 4.7 V < V_{CC} < 14 V; C_{GATE} = 100 pF, $R_{R(OSC)}$ = 53.6 k, C_{COMP} = 0.1 μF, C_{REF} = 0.1μF, DAC Code 10000, C_{VCC} = 0.1 μF, I_{LIM} ≥ 1.0 V; unless otherwise specified.)

Characteristic					Test Conditions	Min	Typ	Max	Unit
Voltage Identification DAC (0 = Connected to V_{SS}; 1 = Open or Pull–up to 3.3 V)									
Accuracy (all codes)					Measure V_{FB} = COMP			± 1.0	%
V_{ID4}	V_{ID3}	V_{ID2}	V_{ID1}	V_{ID0}					
1	1	1	1	1	–	1.064	1.075	1.086	V
1	1	1	1	0	–	1.089	1.100	1.111	V
1	1	1	0	1	–	1.114	1.125	1.136	V
1	1	1	0	0	–	1.139	1.150	1.162	V
1	1	0	1	1	–	1.163	1.175	1.187	V
1	1	0	1	0	–	1.188	1.200	1.212	V
1	1	0	0	1	–	1.213	1.225	1.237	V
1	1	0	0	0	–	1.238	1.250	1.263	V
1	0	1	1	1	–	1.262	1.275	1.288	V
1	0	1	1	0	–	1.287	1.300	1.313	V
1	0	1	0	1	–	1.312	1.325	1.338	V
1	0	1	0	0	–	1.337	1.350	1.364	V
1	0	0	1	1	–	1.361	1.375	1.389	V
1	0	0	1	0	–	1.386	1.400	1.414	V
1	0	0	0	1	–	1.411	1.425	1.439	V
1	0	0	0	0	–	1.436	1.450	1.465	V
0	1	1	1	1	–	1.460	1.475	1.490	V
0	1	1	1	0	–	1.485	1.500	1.515	V
0	1	1	0	1	–	1.510	1.525	1.540	V
0	1	1	0	0	–	1.535	1.550	1.566	V
0	1	0	1	1	–	1.559	1.575	1.591	V
0	1	0	1	0	–	1.584	1.600	1.616	V
0	1	0	0	1	–	1.609	1.625	1.641	V
0	1	0	0	0	–	1.634	1.650	1.667	V
0	0	1	1	1	–	1.658	1.675	1.692	V
0	0	1	1	0	–	1.683	1.700	1.717	V
0	0	1	0	1	–	1.708	1.725	1.742	V
0	0	1	0	0	–	1.733	1.750	1.768	V
0	0	0	1	1	–	1.757	1.775	1.793	V
0	0	0	1	0	–	1.782	1.800	1.818	V
0	0	0	0	1	–	1.807	1.825	1.843	V
0	0	0	0	0	–	1.832	1.850	1.869	V
Input Threshold					V_{ID4}, V_{ID3}, V_{ID2}, V_{ID1}, V_{ID0}	1.00	1.25	1.50	V
Input Pull–up Resistance					V_{ID4}, V_{ID3}, V_{ID2}, V_{ID1}, V_{ID0}	25	50	100	kΩ
Pull–up Voltage					–	3.15	3.30	3.45	V

ELECTRICAL CHARACTERISTICS (continued) ($0°C < T_A < 70°C$; $0°C < T_J < 85°C$; $4.7\ V < V_{CC} < 14\ V$; $C_{GATE} = 100\ pF$, $R_{R(OSC)} = 53.6\ k$, $C_{COMP} = 0.1\ \mu F$, $C_{REF} = 0.1\mu F$, DAC Code 10000, $C_{VCC} = 0.1\ \mu F$, $I_{LIM} \geq 1.0\ V$; unless otherwise specified.)

Characteristic	Test Conditions	Min	Typ	Max	Unit
Voltage Feedback Error Amplifier					
V_{FB} Bias Current (Note 2)	$0.9\ V < V_{FB} < 1.9\ V$	17.6	19.0	20.6	μA
COMP Source Current	COMP = 0.5 V to 2.0 V; V_{FB} = 1.8 V; DAC = 00000	15	30	60	μA
COMP Sink Current	COMP = 0.5 V to 2.0 V; V_{FB} = 1.9 V; DAC = 00000	15	30	60	μA
COMP Discharge Threshold Voltage	–	0.20	0.27	0.34	V
Transconductance	$-10\ \mu A < I_{COMP} < +10\ \mu A$	–	32	–	mmho
Output Impedance	–	–	2.5	–	MΩ
Open Loop DC Gain	Note 3	60	90	–	dB
Unity Gain Bandwidth	0.01 μF	–	400	–	kHz
PSRR @ 1 kHz	–	–	70	–	dB
COMP Max Voltage	V_{FB} = 1.8 V; COMP Open; DAC = 00000	2.4	2.7	–	V
COMP Min Voltage	V_{FB} = 1.9 V; COMP Open; DAC = 00000	–	0.1	0.2	V
Hiccup Latch Discharge Current	–	2.0	5.0	10	μA
COMP Discharge Ratio	–	4.0	6.0	10	–
PWM Comparators					
Minimum Pulse Width	Measured from CSx to GATE(H) with 60 mV step between CSx and CS_{REF}	–	350	500	ns
Channel Start Up Offset	V(CS1) = V(CS2) = V(CS3) = V(V_{FB}) V(CS_{REF}) = 0 V; Measure V(COMP) when GATE (H) 1, 2 switch high	0.3	0.4	0.5	V
GATEs					
High Voltage	Measure V_{CC} – GATEx, I_{GATEx} = 1.0 mA	–	1.2	2.1	V
Low Voltage	Measure GATEx, I_{GATEx} = 1.0 mA	–	0.25	0.50	V
Rise Time GATE	1.0 V < GATE < 8.0 V; V_{CC} = 10 V	–	30	60	ns
Fall Time GATE	8.0 V > GATE > 1.0 V; V_{CC} = 10 V	–	30	60	ns
Oscillator					
Switching Frequency	R_{OSC} = 53.6 k	220	250	280	kHz
Switching Frequency	Note 3 R_{OSC} = 32.4 k	300	400	500	kHz
Switching Frequency	Note 3 R_{OSC} = 16.2 k	600	800	1000	kHz
R_{OSC} Voltage	–	–	1.00	–	V
Phase Delay	Rising edge only	105	120	135	deg
Adaptive Voltage Positioning					
V_{DRP} Offset	CS1 = CS2 = CS3 = CS_{REF}, V_{FB} = COMP Measure V_{DRP} – COMP	–20	–	20	mV
Maximum V_{DRP} Voltage	|(CS1 = CS2 = CS3) – C_{REF}| = 50 mV, V_{FB} = COMP, Measure V_{DRP} – COMP	360	465	570	mV
Current Share Amp to V_{DRP} Gain	–	2.7	3.0	3.5	V/V

2. The V_{FB} Bias Current changes with the value of R_{OSC} per Figure 4.

3. Guaranteed by design. Not tested in production.

ELECTRICAL CHARACTERISTICS (continued) ($0°C < T_A < 70°C$; $0°C < T_J < 85°C$; $4.7\ V < V_{CC} < 14\ V$; $C_{GATE} = 100\ pF$, $R_{R(OSC)} = 53.6\ k$, $C_{COMP} = 0.1\ \mu F$, $C_{REF} = 0.1\mu F$, DAC Code 10000, $C_{VCC} = 0.1\ \mu F$, $I_{LIM} \geq 1.0\ V$; unless otherwise specified.)

Characteristic	Test Conditions	Min	Typ	Max	Unit
Current Sensing and Sharing					
CS1–CS3 Input Bias Current	$V(CSx) = V(CS_{REF}) = 0\ V$	–	0.2	2.0	μA
CS_{REF} Input Bias Current	–	–	0.6	2.0	μA
Current Sense Amplifier Gain	–	3.7	4.2	4.7	V/V
Current Sense Amp Mismatch (The sum of gain and offset errors)	$0 < (CSx – CS_{REF}) < 50\ mV$	–5.0	–	5.0	mV
Current Sense Amplifiers Input Common Mode Range Limit	Note 4	0	–	$V_{CC} – 2$	V
Current Sense Input to I_{LIM} Gain	$0.25\ V < 1.20\ V$	5.0	6.5	8.0	V/V
Current Limit Filter Slew Rate	Note 4	7.5	15	40	mV/μs
I_{LIM} Bias Current	$0 < I_{LIM} < 1.0\ V$	–	0.1	1.0	μA
Single Phase Pulse by Pulse Current Limit: $V(CSx) – V(CS_{REF})$	–	75	105	115	mV
Current Share Amplifier Bandwidth	Note 4	1.0	–	–	mHz
Reference Output					
V_{REF} Output Voltage	$0\ mA < I(V_{REF}) < 1.0\ mA$	3.2	3.3	3.4	V
General Electrical Specifications					
V_{CC} Operating Current	V_{FB} = COMP(no switching)	–	23	28	mA
V_{CC} Start Threshold	GATEs switching, COMP charging	4.05	4.60	4.70	V
V_{CC} Stop Threshold	GATEs stop switching, COMP discharging	3.75	4.4	4.65	V
V_{CC} Hysteresis	GATEs not switching, COMP not charging	100	200	300	mV

4. Guaranteed by design. Not tested in production.

PACKAGE PIN DESCRIPTION

PACKAGE PIN # 20 Lead SO Wide	PIN SYMBOL	FUNCTION
1	R_{OSC}	A resistor from this pin to ground sets operating frequency and V_{FB} bias current.
2	COMP	Output of the error amplifier and input for the PWM comparators.
3	V_{FB}	Voltage Feedback Pin. To use Adaptive Positioning, set the light load offset voltage by connecting a resistor between V_{FB} and CS_{REF}. The resistor and the V_{FB} bias current determine the offset. For no adaptive positioning connect V_{FB} directly to CS_{REF}.
4	V_{DRP}	Current sense output for adaptive voltage positioning (AVP). The level of this pin above the DAC voltage is proportional to the output current. Connect a resistor from this pin to V_{FB} to set AVP or leave this pin open for no AVP.
5–7	CS1–CS3	Current sense inputs. Connect current sense network for the corresponding phase to each CSx pin.
8	CS_{REF}	Reference for Current Sense Amplifiers. To balance input offset voltages between the inverting and noninverting inputs of the Current Sense Amplifiers, connect a resistor between CS_{REF} and the output voltage. The value should be 1/3 of the value of the resistors connected to the CSx pins.
9	I_{LIM}	Sets the threshold for hiccup mode current limit. Connect to reference through a resistive divider.
10	REF	Reference output. Decouple with 0.1 μF.
11–15	VID0–VID4	Voltage ID DAC inputs. These pins are internally pulled up to 3.3 V if left open.
16	Gnd	IC Gnd.
17–19	GATE1–3	GATE drive signal.
20	V_{CC}	Power for IC.

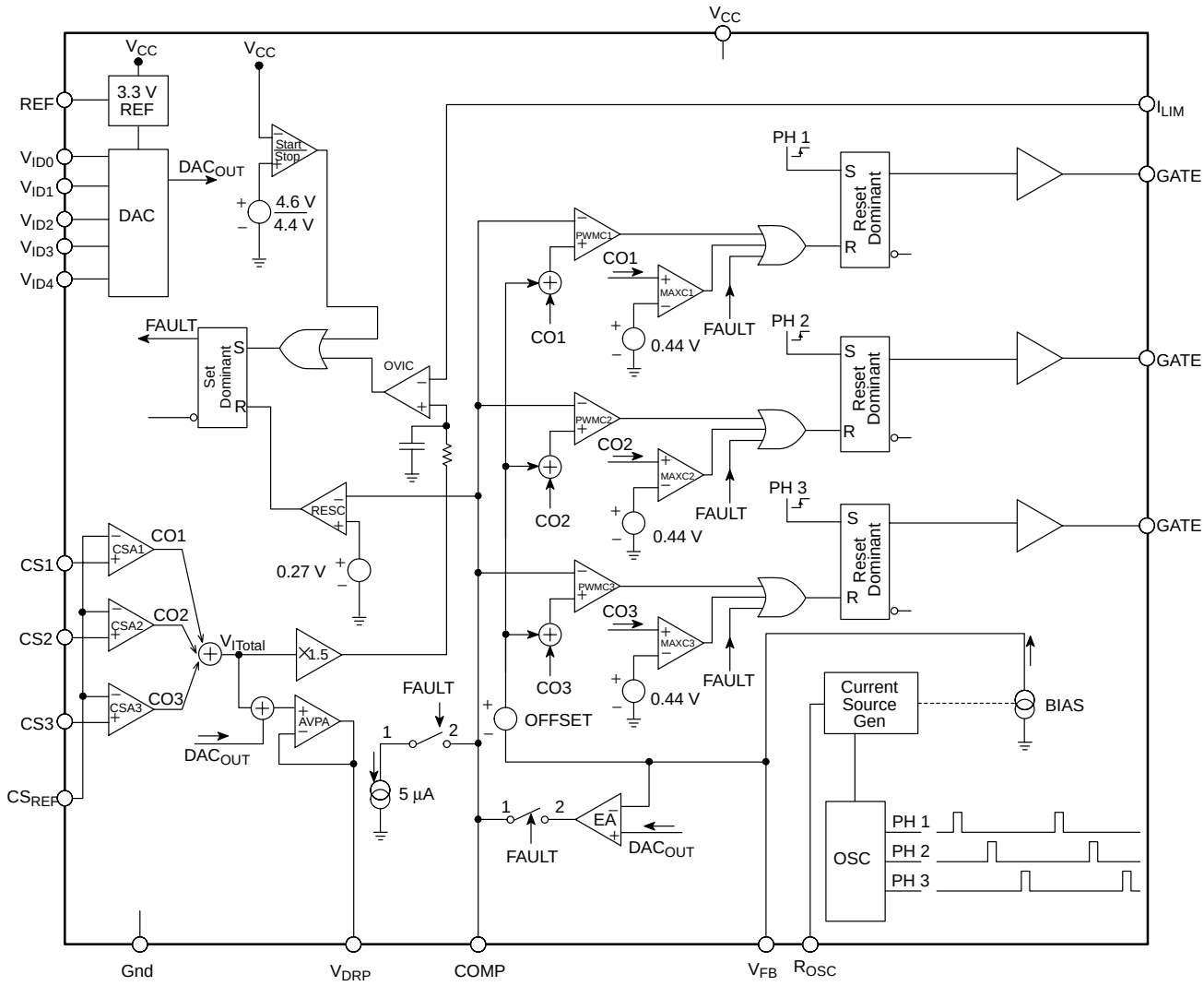

Figure 2. Block Diagram

TYPICAL PERFORMANCE CHARACTERISTICS

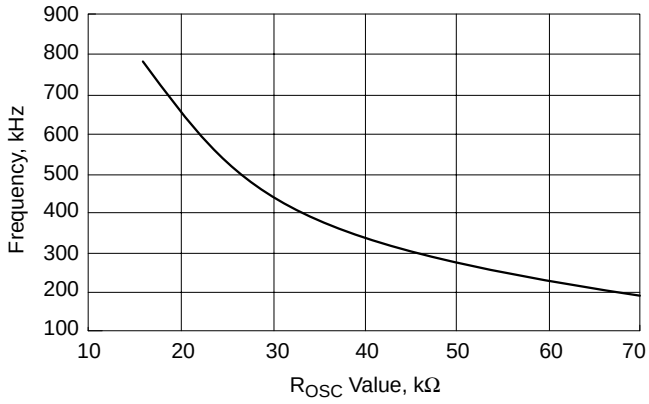

Figure 3. Oscillator Frequency

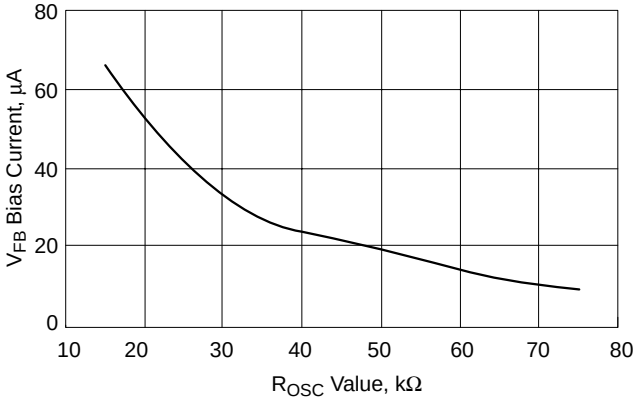

Figure 4. V_{FB} Bias Current vs. R_{OSC} Value

APPLICATIONS INFORMATION

FIXED FREQUENCY MULTI–PHASE CONTROL

In a multi–phase converter, multiple converters are connected in parallel and are switched on at different times. This reduces output current from the individual converters and increases the apparent ripple frequency. Because several converters are connected in parallel, output current can ramp up or down faster than a single converter (with the same value output inductor) and heat is spread among multiple components.

The CS5323 uses a three–phase, fixed frequency, enhanced V^2 architecture. Each phase is delayed 120° from the previous phase. Normally the GATE transitions high at the beginning of each oscillator cycle. Inductor current ramps up until the combination of the current sense signal and the output ripple trip the PWM comparator and bring the GATE low. Once the GATE goes low, it will remain low until the beginning of the next oscillator cycle. While the GATE is high, the enhanced V^2 loop will respond to line and load transients. Once the GATE is low, the loop will not respond again until the beginning of the next cycle. Therefore, constant frequency, enhanced V^2 will typically respond within the off–time of the converter.

The enhanced V^2 architecture measures and adjusts current in each phase. An additional input (C_X) for inductor current information has been added to the V^2 loop for each phase as shown in Figure 5.

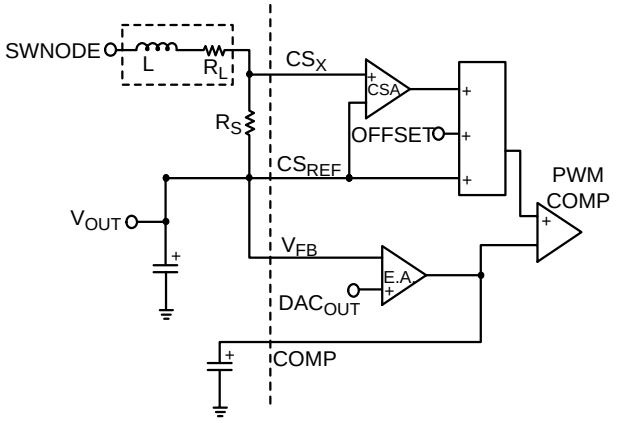

Figure 5. Enhanced V^2 Feedback and Current Sense Scheme

The inductor current is measured across R_S, amplified by CSA and summed with the OFFSET and Output Voltage at the non–inverting input of the PWM comparator. The inductor current provides the PWM ramp and as inductor current increases the voltage on the positive pin of the pwm comparator rises and terminates the pwm cycle. If the inductor starts the cycle with a higher current the PWM cycle will terminate earlier providing negative feedback. The CS5323 provides a C_X input for each phase, but the CS_{REF}, V_{FB} and COMP inputs are common to all phases. Current sharing is accomplished by referencing all phases to the same V_{FB} and COMP pins, so that a phase with a larger current signal will turn off earlier than phases with a smaller current signal.

Including both current and voltage information in the feedback signal allows the open loop output impedance of the power stage to be controlled. If the COMP pin is held steady and the inductor current changes there must also be a change in the output voltage. Or, in a closed loop configuration when the output current changes, the COMP pin must move to keep the same output voltage. The required change in the output voltage or COMP pin depends on the scaling of the current feedback signal and is calculated as

$$\Delta V = R_S \times \text{CSA Gain} \times \Delta I$$

The single–phase power stage output impedance is;

$$\text{Single Stage Impedance} = \Delta V/\Delta I = R_S \times \text{CSA Gain}.$$

The multi–phase power stage output impedance is the single–phase output impedance divided by the number of phases. The output impedance of the power stage determines how the converter will respond during the first few μs of a transient before the feedback loop has repositioned the COMP pin.

The peak output current of each phase can also be calculated from;

$$I_{pkout\ (per\ phase)} = \frac{V_{COMP} - V_{FB} - V_{OFFSET}}{R_S \times \text{CSA Gain}}$$

Figure 6 shows the step response of a single phase with the COMP pin at a fixed level. Before T1 the converter is in normal steady state operation. The inductor current provides the pwm ramp through the Current Share Amplifier. The pwm cycle ends when the sum of the current signal, voltage signal and OFFSET exceed the level of the COMP pin. At T1 the output current increases and the output voltage sags. The next pwm cycle begins and the cycle continues longer than previously while the current signal increases enough to make up for the lower voltage at the V_{FB} pin and the cycle ends at T2. After T2 the output voltage remains lower than at light load and the current signal level is raised so that the sum of the current and voltage signal is the same as with the original load. In a closed loop system the COMP pin would move higher to restore the output voltage to the original level.

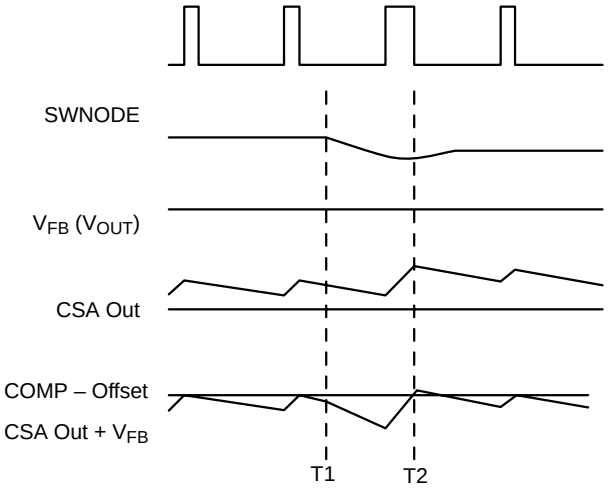

Figure 6. Open Loop Operation

Inductive Current Sensing

For lossless sensing current can be sensed across the inductor as shown below in Figure 7. In the diagram, L is the output inductance and R_L is the inherent inductor resistance. To compensate the current sense signal the values of R1 and C1 are chosen so that $L/R_L = R1 \times C1$. If this criteria is met the current sense signal will be the same shape as the inductor current, the voltage signal at Cx will represent the instantaneous value of inductor current and the circuit can be analyzed as if a sense resistor of value R_L was used as a sense resistor (R_S).

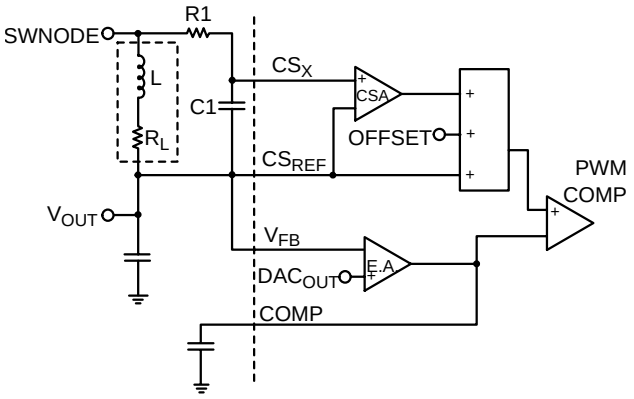

Figure 7. Lossless Inductive Current Sensing with Enhanced V^2

When choosing or designing inductors for use with inductive sensing, tolerances and temperature effects should be considered. Cores with a low permeability material or a large gap will usually have minimal inductance change with temperature and load. Copper magnet wire has a temperature coefficient of 0.39% per °C. The increase in winding resistance at higher temperatures should be considered when setting the I_{LIM} threshold. If a more accurate current sense is required than inductive sensing can provide, current can be sensed through a resistor as shown in Figure 5.

Current Sharing Accuracy

PCB traces that carry inductor current can be used as part of the current sense resistance depending on where the current sense signal is picked off. For accurate current sharing, the current sense inputs should sense the current at the same point for each phase and the connection to the CS_{REF} should be made so that no phase is favored. (In some cases, especially with inductive sensing, resistance of the pcb can be useful for increasing the current sense resistance.) The total current sense resistance used for calculations must include any pcb trace between the CS inputs and the CS_{REF} input that carries inductor current.

Current Sense Amplifier Input Mismatch and the value of the current sense element will determine the accuracy of current sharing between phases. The worst case Current Sense Amplifier Input Mismatch is 5 mV and will typically be within 3 mV. The difference in peak currents between phases will be the CSA Input Mismatch divided by the current sense resistance. If all current sense elements are of equal resistance a 3 mV mismatch with a 2 mΩ sense resistance will produce a 1.5 A difference in current between phases.

Operation at > 50% Duty Cycle

For operation at duty cycles above 50% Enhanced V^2 will exhibit subharmonic oscillation unless a compensation ramp is added to each phase. A circuit like the one on the left side of Figure 8 can be added to each current sense network to implement slope compensation. The value of R1 can be varied to adjust the ramp size.

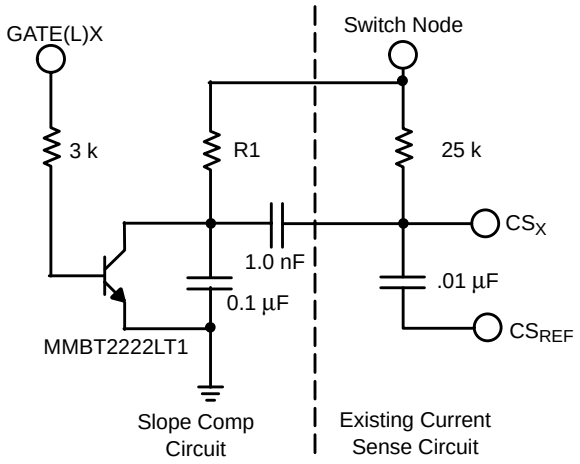

Figure 8. External Slope Compensation Circuit

Ramp Size and Current Sensing

Because the current ramp is used for both the PWM ramp and to sense current, the inductor and sense resistor values will be constrained. A small ramp will provide a quick transient response by minimizing the difference over which the COMP pin must travel between light and heavy loads, but a steady state ramp of 25 mV_{P-P} or greater is typically required to prevent pulse skipping and minimize pulse width jitter. For resistive current sensing the combination of the inductor and sense resistor values must be chosen to provide a large enough steady state ramp. For large inductor values the sense resistor value must also be increased.

For inductive current sensing the RC network must meet the requirement of $L/R_L = R \times C$ to accurately sense the AC and DC components of the current the signal. Again the values for L and R_L will be constrained in order to provide a large enough steady state ramp with a compensated current sense signal. A smaller L, or a larger R_L than optimum might be required. But unlike resistive sensing, with inductive sensing small adjustments can be made easily with the values of R and C to increase the ramp size if needed.

If RC is chosen to be smaller (faster) than L/R_L, the AC portion of the current sensing signal will be scaled larger than the DC portion. This will provide a larger steady state ramp, but circuit performance will be affected and must be evaluated carefully. The current signal will overshoot during transients and settle at the rate determined by $R \times C$. It will eventually settle to the correct DC level, but the error will decay with the time constant of $R \times C$. If this error is excessive it will effect transient response, adaptive positioning and current limit. During transients the COMP pin will be required to overshoot along with the current signal in order to maintain the output voltage. The V_{DRP} pin will also overshoot during transients and possibly slow the response. Single phase overcurrent will trip earlier than it would if compensated correctly and hiccup mode current limit will have a lower threshold for fast rise step loads than for slowly rising output currents.

The waveforms in Figure 9 show a simulation of the current sense signal and the actual inductor current during a positive step in load current with values of L = 500 nH, R_L = 1.6 mΩ, R1 = 20 k and C1 = .01 μF. For ideal current signal compensation the value of R1 should be 31 kΩ. Due to the faster than ideal RC time constant there is an overshoot of 50% and the overshoot decays with a 200 μs time constant. With this compensation the I_{LIM} pin threshold must be set more than 50% above the full load current to avoid triggering hiccup mode during a large output load step.

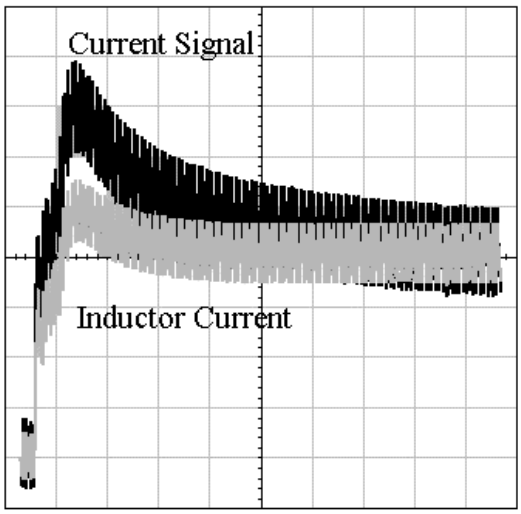

Figure 9. Inductive Sensing waveform during a Step with Fast RC Time Constant (50 μs/div)

Current Limit

Two levels of overcurrent protection are provided. Any time the voltage on a Current Sense pin exceeds CS_{REF} by more than the Single Phase Pulse by Pulse Current Limit, the pwm comparator for that phase is turned off. This provides fast peak current protection for individual phases. The outputs of all the currents are also summed and filtered to compare an averaged current signal to the voltage on the I_{LIM} pin. If this voltage is exceeded, the fault latch trips and the SS capacitor is discharged by a 5 μA source until the COMP pin reaches 0.2 V. Then soft–start begins. The converter will continue to operate in this mode until the fault condition is corrected.

Overvoltage Protection

Overvoltage protection (OVP) is provided as a result of the normal operation of the enhanced V^2 control topology with synchronous rectifiers. The control loop responds to an overvoltage condition within 400 ns, causing the top MOSFET's to shut off, and the synchronous MOSFET's to turn on. This results in a "crowbar" action to clamp the output voltage and prevents damage to the load. The regulator will remain in this state until the overvoltage condition ceases or the input voltage is pulled low.

Transient Response and Adaptive Positioning

For applications with fast transient currents the output filter is frequently sized larger than ripple currents require in

order to reduce voltage excursions during transients. Adaptive voltage positioning can reduce peak–peak output voltage deviations during load transients and allow for a smaller output filter. The output voltage can be set higher at light loads to reduce output voltage sag when the load current is stepped up and set lower during heavy loads to reduce overshoot when the load current is stepped up. For low current applications a droop resistor can provide fast accurate adaptive positioning. However at high currents, the loss in a droop resistor becomes excessive. For example; in a 50 A converter a 1 mΩ resistor to provide a 50 mV change in output voltage between no load and full load would dissipate 2.5 Watts.

Lossless adaptive positioning is an alternative to using a droop resistor, but must respond quickly to changes in load current. Figure 10 shows how adaptive positioning works. The waveform labeled normal shows a converter without adaptive positioning. On the left, the output voltage sags when the output current is stepped up and later overshoots when current is stepped back down. With fast (ideal) adaptive positioning the peak to peak excursions are cut in half. In the slow adaptive positioning waveform the output voltage is not repositioned quickly enough after current is stepped up and the upper limit is exceeded.

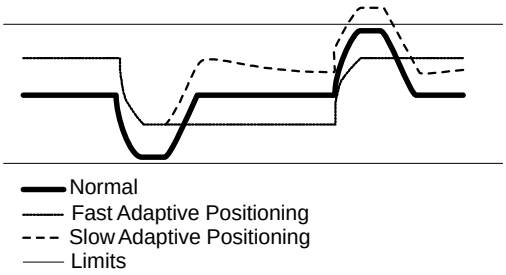

Figure 10. Adaptive Positioning

The CS5323 uses two methods to provide fast and accurate adaptive positioning. For low frequency positioning the V_{FB} and V_{DRP} pins are used to adjust the output voltage with varying load currents. For high frequency positioning, the current sense input pins can be used to control the power stage output impedance. The transition between fast and slow positioning is adjusted by the error amp compensation.

The CS5323 can be configured to adjust the output voltage based on the output current of the converter. The adaptive positioning circuit is designed to select the DAC setting as the maximum output voltage. (Refer to Figure 1 on page 2.)

To set the no–load positioning a resistor (R9) is placed between the output voltage and V_{FB} pin. The V_{FB} bias current will develop a voltage across the resistor to decrease the output voltage. The V_{FB} bias current is dependent on the value of ROSC. See Figure 4 on the datasheet.

During no load conditions the V_{DRP} pin is at the same voltage as the V_{FB} pin, so none of the V_{FB} bias current flows through the V_{DRP} resistor (R6). When output current increases the V_{DRP} pin increases proportionally and the V_{DRP} pin current offsets the V_{FB} bias current and causes the output voltage to further decrease.

The V_{FB} and V_{DRP} pins take care of the slower and DC voltage positioning. The first few μs are controlled primarily by the ESR and ESL of the output filter. The transition between fast and slow positioning is controlled by the ramp size and the error amp compensation. If the ramp size is too large or the error amp too slow there will be a long transition to the final voltage after a transient. This will be most apparent with lower capacitance output filters.

Note: Large levels of adaptive positioning can cause pulse width jitter.

Error Amp Compensation

The transconductance error amplifier can be configured to provide both a slow soft–start and a fast transient response. C4 in the main applications diagram controls soft–start. A 0.1 μF capacitor with the 30 μA error amplifier output capability will allow the output to ramp up at 0.3 V/ms or 1.5 V in 5 ms.

R10 is connected in series with C4 to allow the error amplifier to slew quickly over a narrow range during load transients. Here the 30 μA error amplifier output capability works against 8 kΩ (R10) to limit the window of fast slewing too 240 mV – enough to allow for fast transients, but not enough to interfere with soft–start. This window will be noticeable as a step in the COMP pin voltage at start–up. The size of this step must be kept smaller than the Channel Start–Up Offset (nominally 0.4 V) for proper soft–start operation. If adaptive positioning is used the R9 and R8 form a divider with the V_{DRP} end held at the DAC voltage during start–up, which effectively makes the Channel Start–Up Offset larger.

C12 is included for error amp stability. A capacitive load is required on the error amp output. Use of values less than 1 nF may result in error amp oscillation of several MHz.

C11 and the parallel resistance of the V_{FB} resistor (R9) and the V_{DRP} resistor (R6) are used to roll off the error amp gain. C28 adds a zero to the error amp response to boost the phase near the crossover frequency.

UVLO

The CS5323 has one undervoltage lockout function connected to the V_{CC} pin. In applications where the converter is powered from multiple voltages, additional UVLO protection might be required if the voltage powering the controller can turn on before other voltages.

For the 12 V_{IN} converter in Figure 1, the CS5323 UVLO function monitors the 5.0 V supply. If the 5.0 V supply comes up before the 12 V supply, the COMP pin will rise until it reaches the upper rail or until the 12 V supply comes up and the converter comes into regulation. If the delay between the 5.0 V and 12 V supplies is too long, soft–start will be compromised. A diode connected from the 12 V supply to the COMP pin can hold the COMP pin down until the 12 V supply starts to come up. Or, if a higher UVLO

threshold is needed, a circuit like the one in Figure 11 will lock out the converter until the 12 V supply reaches about 7.0 V.

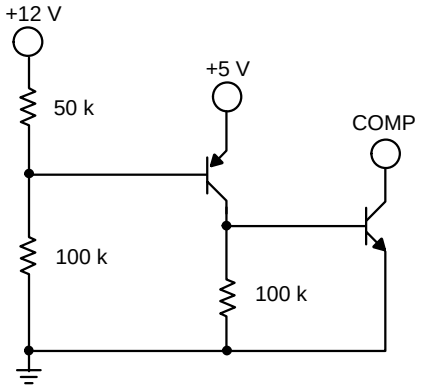

Figure 11. External UVLO Circuit

Remote Sense

In some applications that require remote output voltage sensing, there are conditions when the path of the feedback signal can be broken. In a voltage regulator module (VRM) the remote voltage feedback sense point is typically off the module. If the module is powered apart from the intended application, the feedback will be left open. On a motherboard, the feedback path might be broken when the processor socket is left open. Without the feedback connection the output voltage is likely to exceed the intended voltage. To protect the circuit from overvoltage conditions, a resistor can be connected between the local output voltage and the remote sense line as shown in Figure 12.

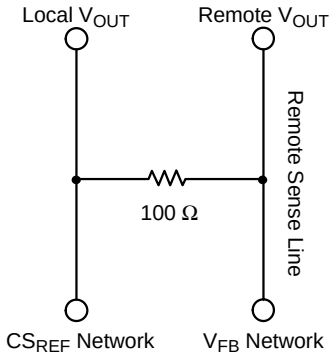

Figure 12. Remote Sense Connection

Layout Guidelines

With the fast rise, high output currents of microprocessor applications parasitic inductance and resistance should be considered when laying out the power, filter and feedback signal sections of the board. Typically a multi–layer board with at least one ground plane is recommended. If the layout is such that high currents can exist in the ground plane underneath the controller or control circuitry, the ground plane can be slotted to reroute the currents away from the controller. The slots should typically not be placed between the controller and the output voltage or in the return path of the gate drive. Additional power and ground planes or islands can be added as required for a particular layout.

Output filter components should be placed on wide planes connected directly to the load to minimize resistive drops during heavy loads and inductive drops and ringing during transients. If required, the planes for the output voltage and return can be interleaved to minimize inductance between the filter and load.

Voltage feedback should be taken from a point of the output or the output filter that doesn't favor any one phase. If the feedback connection is closer to one inductor than the others the ripple associated with that phase may appear larger than the ripple associated with the other phases and poor current sharing can result.

The current sense signal is typically tens of milli–volts. Noise pick–up should be avoided wherever possible. Current feedback traces should be routed away from noisy areas such as switch nodes and gate drive signals. The paths should be matched as well as possible. It is especially important that all current sense signals be picked off at similar points for accurate current sharing. If the current signal is taken from a place other than directly at the inductor any additional resistance between the pick–off point and the inductor appears as part of the inherent inductor resistance and should be considered in design calculations. Capacitors for the current feedback networks should be placed as close to the current sense pins as practical.

DESIGN PROCEDURE

Current Sensing, Power Stage and Output Filter Components

1. Choose the output filter components to meet peak transient requirements. The formula below can be used to provide an approximate starting point for capacitor choice, but will be inadequate to calculate actual values.

$$\Delta V_{PEAK} = (\Delta I/\Delta T) \times ESL + \Delta I \times ESR$$

Ideally the output filter should be simulated with models including ESR, ESL, circuit board parasitics and delays due to switching frequency and converter response. Typically both bulk capacitance (electrolytic, Oscon, etc,) and low impedance capacitance (ceramic chip) will be required. The bulk capacitance provides "hold up" during the converter response. The low impedance capacitance reduces steady state ripple and bypasses the bulk capacitance during slewing of output current.

2. For inductive current sensing (only) choose the current sense network RC to provide a 25 mV minimum ramp during steady state operation.

$$R = (V_{IN} - V_{OUT}) \times \frac{V_{OUT}/V_{IN}}{F \times C \times 25\ mV}$$

Then choose the inductor value and inherent resistance to satisfy $L/R_L = R \times C$.

For ideal current sense compensation the ratio of L and R_L is fixed, so the values of L and R_L will be a compromise typically with the maximum value R_L limited by conduction losses or inductor temperature rise and the minimum value of L limited by ripple current.

3. For resistive current sensing choose L and R_S to provide a steady state ramp greater than 25 mV.

$$L/R_S = (V_{IN} - V_{OUT}) \times T_{ON}/25\ mV$$

Again the ratio of L and R_L is fixed and the values of L and R_S will be a compromise.

4. Calculate the high frequency output impedance (ConverterZ) of the converter during transients. This is the impedance of the Output filter ESR in parallel with the power stage output impedance (PwrstgZ) and will indicate how far from the original level (ΔVR) the output voltage will typically recover to within one switching cycle. For a good transient response ΔVR should be less than the peak output voltage overshoot or undershoot.

$$\Delta VR = ConverterZ \times ESR$$

$$ConverterZ = \frac{PwrstgZ \times ESR}{PwrstgZ + ESR}$$

where:

$$PwrstgZ = R_S \times CSA\ Gain/3$$

Multiply the converterZ by the output current step size to calculate where the output voltage should recover to within the first switching cycle after a transient. If the ConverterZ is higher than the value required to recover to where the adaptive positioning is set the remainder of the recovery will be controlled by the error amp compensation and will typically recover in 10 – 20 μs.

$$\Delta VR = \Delta I_{OUT} \times ConverterZ$$

Make sure that ΔVR is less than the expected peak transient for a good transient response.

5. Adjust L and R_L or R_S as required to meet the best combination of transient response, steady state output voltage ripple and pulse width jitter.

Current Limit

When the sum of the Current Sense amplifiers (V_{ITOTAL}) exceeds the voltage on the I_{LIM} pin the part will enter hiccup mode. For inductive sensing the I_{LIM} pin voltage should be set based on the inductor resistance (or current sense resistor) at max temperature and max current. To set the level of the I_{LIM} pin:

6. $V_{I(LIM)} = R \times I_{OUT(LIM)} \times CS\ to\ I_{LIM}\ Gain$

where:

R is R_L or R_S;

$I_{OUT(LIM)}$ is the current limit threshold.

For the overcurrent to work properly the inductor time constant (L/R) should be ≤ the Current sense RC. If the RC is too fast, during step loads the current waveform will appear larger than it is (typically for a few hundred μs) and may trip the current limit at a level lower than the DC limit.

Adaptive Positioning

7. To set the amount of voltage positioning below the DAC setting at no load connect a resistor ($R_{V(FB)}$) between the output voltage and the V_{FB} pin. Choose $R_{V(FB)}$ as;

$$R_{V(FB)} = NL\ Position/V_{FB}\ Bias\ Current$$

See Figure 4 for V_{FB} Bias Current.

8. To set the difference in output voltage between no load and full load, connect a resistor ($R_{V(DRP)}$) between the V_{DRP} and V_{FB} pins. $R_{V(DRP)}$ can be calculated in two steps. First calculate the difference between the V_{DRP} and V_{FB} pin at full load. (The V_{FB} voltage should be the same as the DAC voltage during closed loop operation.) Then choose the $R_{V(DRP)}$ to source enough current across $R_{V(FB)}$ for the desired change in output voltage.

$$\Delta V_{V(DRP)} = I_{OUTFL} \times R \times CS\ to\ V_{DRP}\ Gain$$

where:

R = R_L or R_S for one phase;

I_{OUTFL} is the full load output current.

$$R_{V(DRP)} = \Delta V_{DRP} \times R_{V(FB)}/\Delta V_{OUT}$$

Calculate Input Filter Capacitor Current Ripple

The procedure below assumes that phases do not overlap and output inductor ripple current (P–P) is less than the average output current of one phase.

9. Calculate Input Current

$$I_{IN} = \frac{V_{OUT} \times I_{OUT}}{(Efficiency \times V_{IN})}$$

10. Calculate Duty Cycle (per phase).

$$Duty\ Cycle = \frac{V_{OUT}}{(Efficiency \times V_{IN})}$$

11. Calculate Apparent Duty Cycle.

$$Apparent\ Duty\ Cycle = Duty\ Cycle \times \#\ of\ Phases$$

12. Calculate Input Filter Capacitor Ripple Current. Use the chart in Figure 13 to calculate the normalized ripple current (K_{RMS}) based on the reciprocal of Apparent Duty Cycle. Then multiply the input current by K_{RMS} to obtain the Input Filter Capacitor Ripple Current.

$$Ripple\ (RMS) = I_{IN} \times K_{RMS}$$

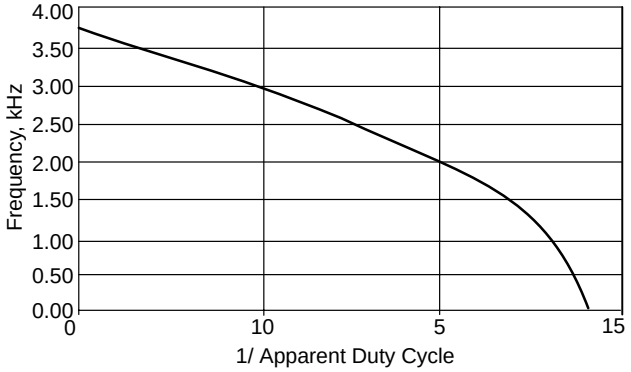

Figure 13. Normalized Input Filter Capacitor Ripple Current

DESIGN EXAMPLE

Choose the component values for lossless current sensing, adaptive positioning and current limit for a 12 V to 1.5 V 60 A converter. The adaptive positioning is chosen 20 mV below the maximum V_{OUT} at no load and 70 mV below the no–load position with 60 A out. The peak output voltage transient is 100 mV max during a 60 A step current. The overcurrent limit is nominally 75 A.

Current Sensing, Power Stage and Output Filter Components

1. Assume 1.5 mΩ of output filter ESR.
2. $R = (V_{IN} - V_{OUT}) \times (V_{OUT}/V_{IN})/(F \times C \times 25\ mV)$
   $= (12 - 1.5) \times (1.5/12)/(250\ k \times .01\ \mu F \times 25\ mV)$
   $= 21\ k\Omega \Rightarrow$ Choose 20 kΩ

   $L/R_L = .01\ \mu F \times 20\ k\Omega = 200\ \mu s$
   Choose $R_L = 2.0\ m\Omega$
   $L = 2\ m\Omega \times 200\ \mu s = 400\ nH$
3. n/a
4. $PwrstgZ = R_L \times CSA\ Gain/3$
   $= 1.5\ m\Omega \times 4.2/3 = 2.1\ m\Omega$

   $$ConverterZ = \frac{PwrstgZ \times ESR}{PwrstgZ + ESR}$$
   $$= \frac{2.8\ m\Omega \times 1.5\ m\Omega}{2.8\ m\Omega + 1.5\ m\Omega} \cong 1.0\ m\Omega$$
   $\Delta VR = 1.0\ m\Omega \times 60\ A = 60\ mV$
5. n/a

Current Limit

6. $V_{I(LIM)} = R_L \times I_{OUT(LIM)} \times CS\ to\ I_{LIM}\ Gain$
   $= 1.5\ m\Omega \times 75\ A \times 6.5 = 731\ mV$

Adaptive Positioning

7. $R_{V(FB)} = NL\ Position/V_{FB}\ Bias\ Current$
   $= 20\ mV/19\ \mu A \cong 1.00\ k\Omega$
8. $\Delta V_{DRP} = R_L \times I_{OUT} \times Current\ Sense\ to\ V_{DRP}\ Gain$
   $= 2\ m\Omega \times 60\ A \times 3 = 360\ mV$

   $R_{V(DRP)} = \Delta V_{DRP} \times R_{V(FB)}/\Delta V_{OUT}$
   $= 360\ mV \times 1.00\ k\Omega/50\ mV = 7.2\ k\Omega$
9. $$I_{IN} = \frac{1.6\ V \times 60\ A}{(0.85 \times 12 V_{IN})} = 9.4\ A$$
10. $$Duty\ Cycle = \frac{1.6\ V}{(0.85 \times 12\ V_{IN})} = 0.16$$
11. $Apparent\ Duty\ Cycle = 0.16 \times 3.0 = 0.48$
12. RMS ripple is $9.4\ A \times 1.0 = 9.4\ A$

PACKAGE DIMENSIONS

SO–20L
DW SUFFIX
CASE 751D–05
ISSUE F

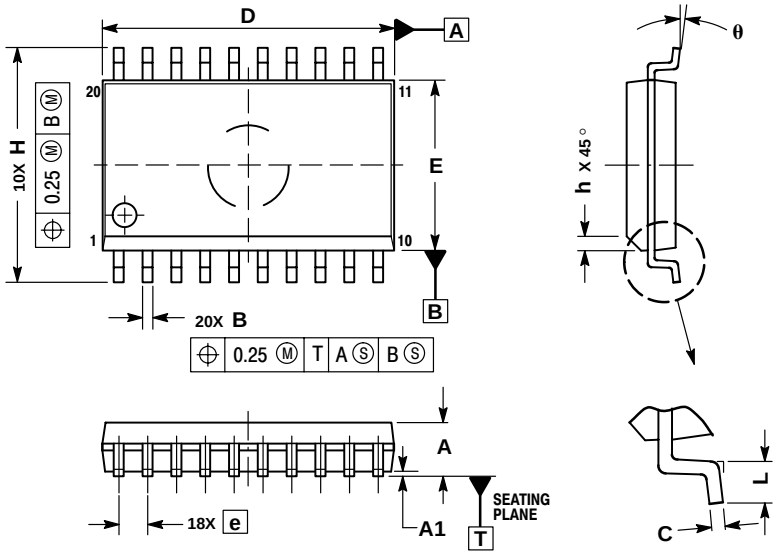

NOTES:
1. DIMENSIONS ARE IN MILLIMETERS.
2. INTERPRET DIMENSIONS AND TOLERANCES PER ASME Y14.5M, 1994.
3. DIMENSIONS D AND E DO NOT INCLUDE MOLD PROTRUSION.
4. MAXIMUM MOLD PROTRUSION 0.15 PER SIDE.
5. DIMENSION B DOES NOT INCLUDE DAMBAR PROTRUSION. ALLOWABLE PROTRUSION SHALL BE 0.13 TOTAL IN EXCESS OF B DIMENSION AT MAXIMUM MATERIAL CONDITION.

	MILLIMETERS	
DIM	MIN	MAX
A	2.35	2.65
A1	0.10	0.25
B	0.35	0.49
C	0.23	0.32
D	12.65	12.95
E	7.40	7.60
e	1.27 BSC	
H	10.05	10.55
h	0.25	0.75
L	0.50	0.90
θ	0°	7°

PACKAGE THERMAL DATA

Parameter		SO–20L	Unit
$R_{\Theta JC}$	Typical	17	°C/W
$R_{\Theta JA}$	Typical	90	°C/W

V^2 is a trademark of Switch Power, Inc.

ON Semiconductor and are registered trademarks of Semiconductor Components Industries, LLC (SCILLC). SCILLC reserves the right to make changes without further notice to any products herein. SCILLC makes no warranty, representation or guarantee regarding the suitability of its products for any particular purpose, nor does SCILLC assume any liability arising out of the application or use of any product or circuit, and specifically disclaims any and all liability, including without limitation special, consequential or incidental damages. "Typical" parameters which may be provided in SCILLC data sheets and/or specifications can and do vary in different applications and actual performance may vary over time. All operating parameters, including "Typicals" must be validated for each customer application by customer's technical experts. SCILLC does not convey any license under its patent rights nor the rights of others. SCILLC products are not designed, intended, or authorized for use as components in systems intended for surgical implant into the body, or other applications intended to support or sustain life, or for any other application in which the failure of the SCILLC product could create a situation where personal injury or death may occur. Should Buyer purchase or use SCILLC products for any such unintended or unauthorized application, Buyer shall indemnify and hold SCILLC and its officers, employees, subsidiaries, affiliates, and distributors harmless against all claims, costs, damages, and expenses, and reasonable attorney fees arising out of, directly or indirectly, any claim of personal injury or death associated with such unintended or unauthorized use, even if such claim alleges that SCILLC was negligent regarding the design or manufacture of the part. SCILLC is an Equal Opportunity/Affirmative Action Employer.

PUBLICATION ORDERING INFORMATION

Literature Fulfillment:
Literature Distribution Center for ON Semiconductor
P.O. Box 5163, Denver, Colorado 80217 USA
Phone: 303–675–2175 or 800–344–3860 Toll Free USA/Canada
Fax: 303–675–2176 or 800–344–3867 Toll Free USA/Canada
Email: ONlit@hibbertco.com

N. American Technical Support: 800–282–9855 Toll Free USA/Canada

JAPAN: ON Semiconductor, Japan Customer Focus Center
2–9–1 Kamimeguro, Meguro–ku, Tokyo, Japan 153–0051
Phone: 81–3–5773–3850
Email: r14525@onsemi.com

ON Semiconductor Website: http://onsemi.com

For additional information, please contact your local Sales Representative.