CS5205A-1

5A Adjustable Linear Regulator

Description

The CS5205A-1 linear regulator provides 5A at an adjustable voltage with an accuracy of ±1%. Two external resistors are used to set the output voltage within a 1.25V to 13V range.

The regulator is intended for use as a post regulator and microprocessor supply. The fast loop response and low dropout voltage make this regulator ideal for applications where low voltage operation and good transient response are important.

The circuit is designed to operate with dropout voltages as low as 1V depending on the output current level. The maximum quiescent current is only 10mA at full load.

The regulator is fully protected against overload conditions with protection circuitry for Safe Operating Area (SOA), overcurrent and thermal shutdown.

The CS5205A-1 is pin compatible with the LT1084 family of linear regulators but has lower dropout voltage.

The regulator is available in TO-220 and surface mount D^2 packages.

Features

- **Output Current to 5A**
- **Output Trimmed to +/- 1%**
- **Dropout Voltage**
  1.15V @ 5A
- **Fast Transient Response**
- **Fault Protection Circuitry**
  Thermal Shutdown
  Overcurrent Protection
  Safe Area Protection

Block Diagram

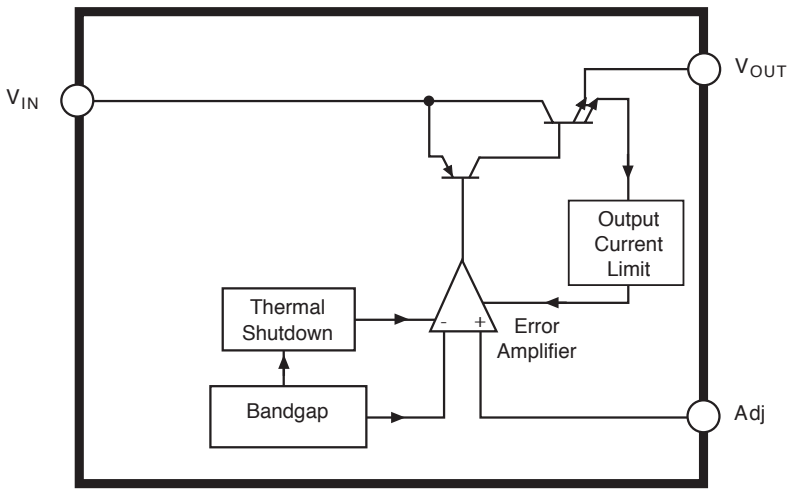

Package Options

3L TO-220
Tab (V_{OUT})

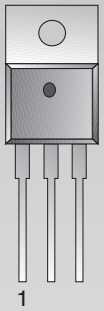

3L D^2PAK

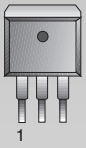

1 Adj
2 V_{OUT}
3 V_{IN}

Cherry Semiconductor
Cherry Semiconductor Corporation
2000 South County Trail, East Greenwich, RI 02818
Tel: (401)885-3600 Fax: (401)885-5786
Email: info@cherry-semi.com
Web Site: www.cherry-semi.com

Absolute Maximum Ratings

Supply Voltage, V_{CC} 17V
Operating Temperature Range ..... -40°C to 70°C
Junction Temperature ..... 150°C
Storage Temperature Range ..... -60°C to 150°C
Lead Temperature Soldering
Wave Solder (through hole styles only) ..... 10 sec. max, 260°C peak
Reflow (SMD styles only) ..... 60 sec. max above 183°C, 230°C peak

Electrical Characteristics: C_{IN} = 10µF, C_{OUT} = 22µF Tantalum, $V_{IN} - V_{OUT}$=3V, $V_{IN} \le 15V$, $0°C \le T_A \le 70°C$, $T_J \le +150°C$, unless otherwise specified, $I_{full\ load}$ = 5A.

PARAMETER	TEST CONDITIONS	MIN	TYP	MAX	UNIT
■ Adjustable Output Voltage					
Reference Voltage (Notes 1 and 2)	$V_{IN}-V_{OUT}$=1.5V; V_{Adj} = 0V 10mA≤I_{OUT}≤5A	1.241 (-1%)	1.254	1.266 (+1%)	V
Line Regulation	1.5V≤$V_{IN}-V_{OUT}$≤6V; I_{OUT}=10mA		0.04	0.20	%
Load Regulation (Notes 1 and 2)	$V_{IN}-V_{OUT}$=1.5V; 10mA≤I_{OUT}≤5A		0.08	0.4	%
Dropout Voltage (Note 3)	I_{OUT}=5A; $T_J \ge 25°C$		1.15	1.25	V
Current Limit	$V_{IN}-V_{OUT}$=3V; $T_J \ge 25°C$ $V_{IN}-V_{OUT}$=9V	5.5	8.5 1.0		A A
Minimum Load Current	$V_{IN}-V_{OUT}$=7V		1.2	6	mA
Adjust Pin Current			50	100	µA
Adjust Pin Current Change	1.5V≤$V_{IN}-V_{OUT}$≤4V; 10mA≤I_{OUT}≤5A		0.2	5.0	µA
Thermal Regulation	30ms pulse; T_A=25°C		0.003		%W
Ripple Rejection	f=120Hz; C_{Adj}=25µF; I_{OUT}=5A		82		dB
Temperature Stability			0.5		%
RMS Output Noise	10Hz≤f≤10kHz; T_A=25°C		0.003		%V_{OUT}
Thermal Shutdown		150	180		°C
Thermal Shutdown Hysteresis			25		°C

Note 1: Load regulation and output voltage are measured at a constant junction temperature by low duty cycle pulse testing. Changes in output voltage due to thermal gradients or temperature changes must be taken into account separately.

Note 2: Specifications apply for an external Kelvin sense connection at a point on the output pin 1/4" from the bottom of the package.

Note 3: Dropout voltage is a measurement of the minimum input/output differential at full load.

Package Pin Description

PACKAGE PIN #		PIN SYMBOL	FUNCTION
D^2PAK	3L TO-220		
1	1	Adj	Adjust pin (low side of the internal reference).
2	2	V_{OUT}	Regulated output voltage (case).
3	3	V_{IN}	Input voltage.

Typical Performance Characteristics

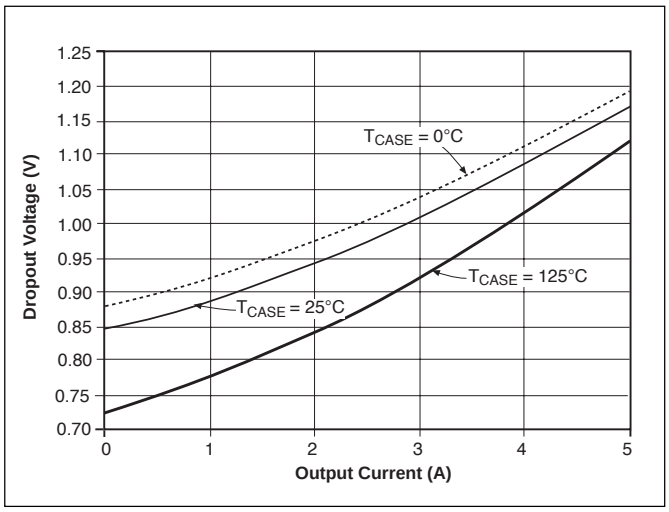

Dropout Voltage vs. Output Current

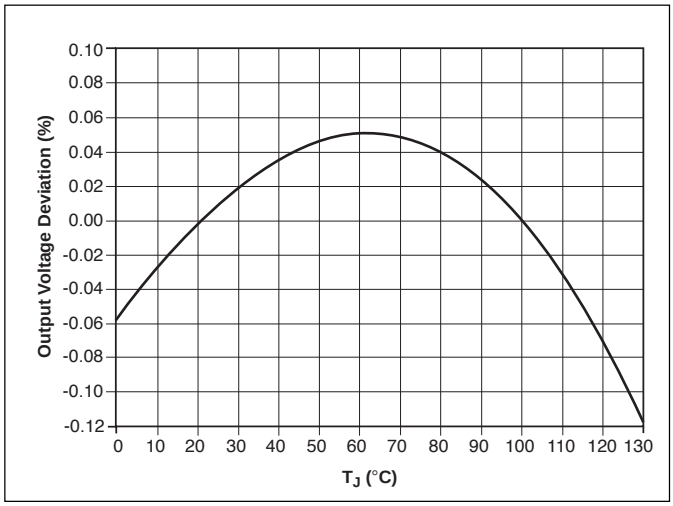

Reference Voltage vs. Temperature

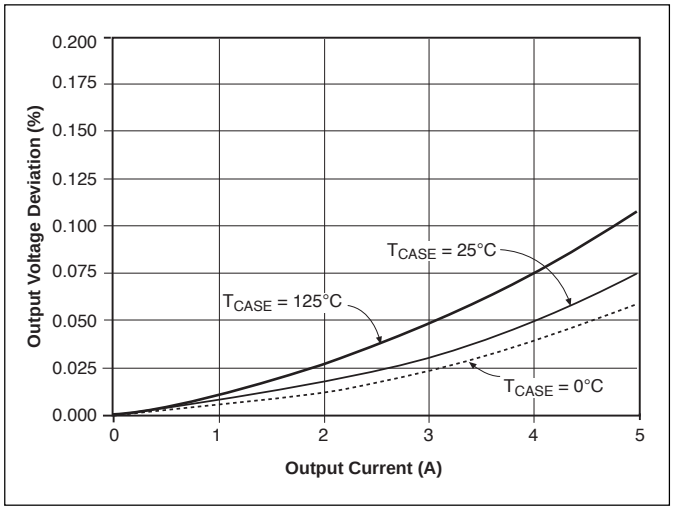

Load Regulation vs. Output Current

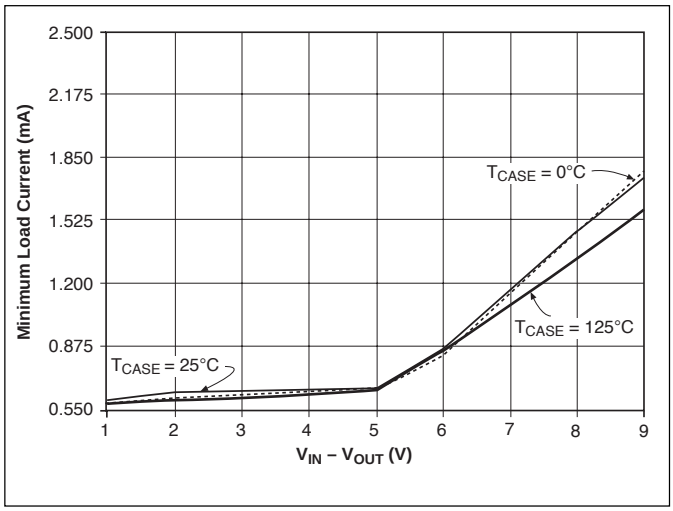

Minimum Load Current

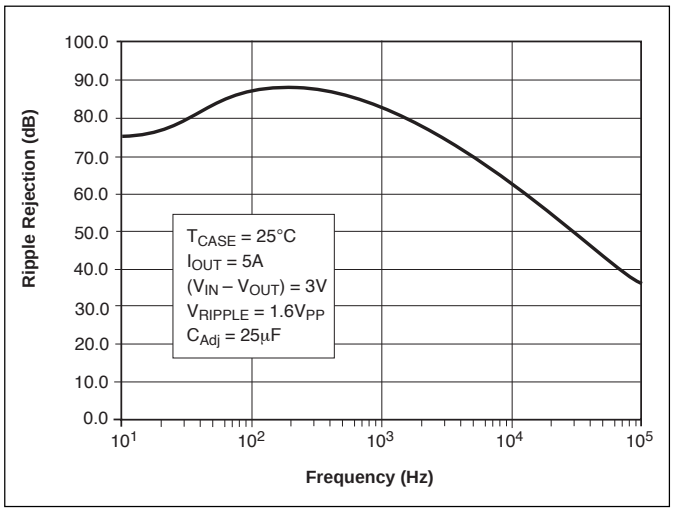

Ripple Rejection vs. Frequency

Applications Information

The CS5205A-1 linear regulator provides an adjustable voltage at currents up to 5A. The regulator is protected against short circuit, and include thermal shutdown and safe area protection (SOA) circuitry. The SOA protection circuitry decreases the maximum available output current as the input-output differential voltage increases.

The CS5205A-1 has a composite PNP-NPN output transistor and requires an output capacitor for stability. A detailed procedure for selecting this capacitor is included in the Stability Considerations section.

Adjustable Operation

The adjustable regulator (CS5205A-1) has an output voltage range of 1.25V to 13V. An external resistor divider sets the output voltage as shown in Figure 1. The regulator maintains a fixed 1.25V (typical) reference between the output pin and the adjust pin.

A resistor divider network R1 and R2 causes a fixed current to flow to ground. This current creates a voltage across R2 that adds to the 1.25V across R1 and sets the overall output voltage. The adjust pin current (typically 50μA) also flows through R2 and adds a small error that should be taken into account if precise adjustment of V_{OUT} is necessary.

The output voltage is set according to the formula:

$$V_{OUT} = V_{REF} \times \left(\frac{R1 + R2}{R1} \right) + I_{Adj} \times R2$$

The term $I_{Adj} \times R2$ represents the error added by the adjust pin current.

R1 is chosen so that the minimum load current is at least 10mA. R1 and R2 should be the same type, e.g. metal film for best tracking over temperature. The adjust pin is bypassed to improve the transient response and ripple rejection of the regulator.

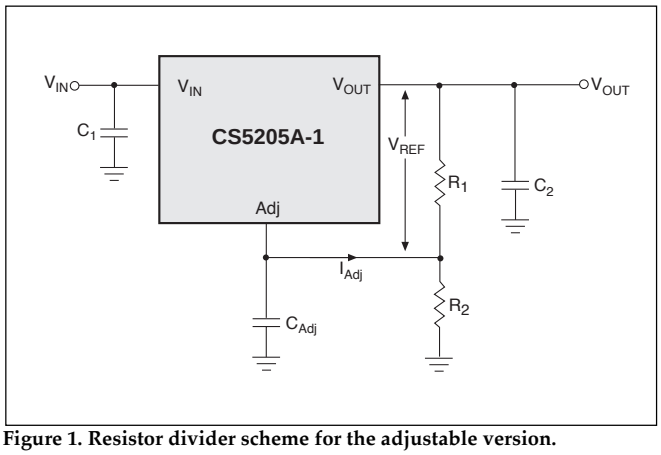

Figure 1. Resistor divider scheme for the adjustable version.

Stability Considerations

The output or compensation capacitor helps determine three main characteristics of a linear regulator: start-up delay, load transient response and loop stability.

The capacitor value and type is based on cost, availability, size and temperature constraints. A tantalum or aluminum electrolytic capacitor is best, since a film or ceramic capacitor with almost zero ESR, can cause instability. The aluminum electrolytic capacitor is the least expensive solution. However, when the circuit operates at low temperatures, both the value and ESR of the capacitor will vary considerably. The capacitor manufacturers data sheet provides this information.

A 22μF tantalum capacitor will work for most applications, but with high current regulators such as the CS5205A-1 the transient response and stability improve with higher values of capacitor. The majority of applications for this regulator involve large changes in load current so the output capacitor must supply the instantaneous load current. The ESR of the output capacitor causes an immediate drop in output voltage given by:

$$\Delta V = \Delta I \times ESR$$

For microprocessor applications it is customary to use an output capacitor network consisting of several tantalum and ceramic capacitors in parallel. This reduces the overall ESR and reduces the instantaneous output voltage drop under load transient conditions. The output capacitor network should be as close as possible to the load for the best results.

Protection Diodes

When large external capacitors are used with a linear regulator it is sometimes necessary to add protection diodes. If the input voltage of the regulator gets shorted, the output capacitor will discharge into the output of the regulator. The discharge current depends on the value of the capacitor, the output voltage and the rate at which V_{IN} drops. In the CS5205A-1 linear regulator, the discharge path is through a large junction and protection diodes are not usually needed. If the regulator is used with large values of output capacitance and the input voltage is instantaneously shorted to ground, damage can occur. In this case, a diode connected as shown in Figure2 is recommended.

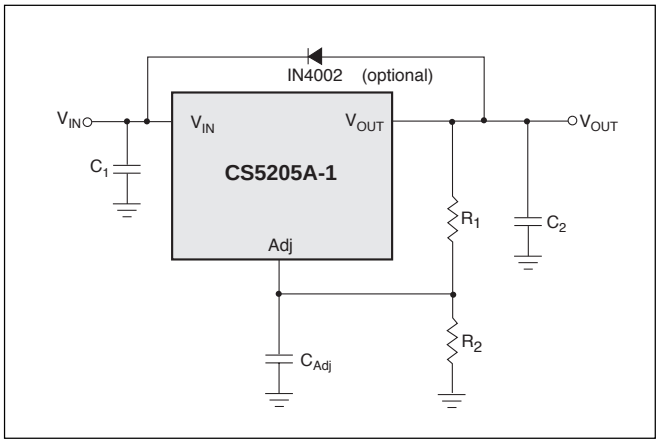

Figure 2. Protection diode scheme for adjustable output regulator.

Output Voltage Sensing

Since the CS5205A-1 is a three terminal regulator, it is not possible to provide true remote load sensing. Load regulation is limited by the resistance of the conductors connecting the regulator to the load.

Best load regulation occurs when R1 is connected directly to the output pin of the regulator as shown in Figure 3. If R1 is connected to the load, R_C is multiplied by the divider ratio and the effective resistance between the regulator and the load becomes

$$R_C \times \left(\frac{R1 + R2}{R1} \right)$$

R_C = conductor parasitic resistance

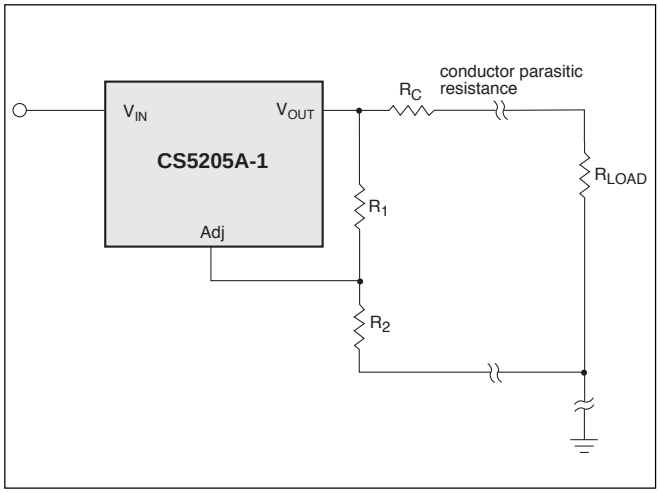

Figure 3. Grounding scheme for the adjustable output regulator to minimize parasitics.

Calculating Power Dissipation and Heat Sink Requirements

The CS5205A-1 linear regulator includes thermal shutdown and safe operating area circuitry to protect the device. High power regulators such as these usually operate at high junction temperatures so it is important to calculate the power dissipation and junction temperatures accurately to ensure that an adequate heat sink is used.

The case is connected to V_{OUT} on the CS5205A-1, electrical isolation may be required for some applications. Thermal compound should always be used with high current regulators such as these.

The thermal characteristics of an IC depend on the following four factors:

1. Maximum Ambient Temperature T_A (°C)
2. Power dissipation P_D (Watts)
3. Maximum junction temperature T_J (°C)
4. Thermal resistance junction to ambient $R_{\Theta JA}$ (C/W)

These four are related by the equation

$$T_J = T_A + P_D \times R_{\Theta JA} \quad (1)$$

The maximum ambient temperature and the power dissipation are determined by the design while the maximum junction temperature and the thermal resistance depend on the manufacturer and the package type.

The maximum power dissipation for a regulator is:

$$P_{D(max)} = \{V_{IN(max)} - V_{OUT(min)}\} I_{OUT(max)} + V_{IN(max)} I_Q \quad (2)$$

where

$V_{IN(max)}$ is the maximum input voltage,

$V_{OUT(min)}$ is the minimum output voltage,

$I_{OUT(max)}$ is the maximum output current, for the application

I_Q is the maximum quiescent current at I_{OUT}(max).

A heat sink effectively increases the surface area of the package to improve the flow of heat away from the IC and into the surrounding air.

Each material in the heat flow path between the IC and the outside environment has a thermal resistance. Like series electrical resistances, these resistances are summed to determine $R_{\Theta JA}$, the total thermal resistance between the junction and the surrounding air.

1. Thermal Resistance of the junction to case, $R_{\Theta JC}$ (°C/W)
2. Thermal Resistance of the case to Heat Sink, $R_{\Theta CS}$ (°C/W)
3. Thermal Resistance of the Heat Sink to the ambient air, $R_{\Theta SA}$ (°C/W)

These are connected by the equation:

$$R_{\Theta JA} = R_{\Theta JC} + R_{\Theta CS} + R_{\Theta SA} \quad (3)$$

The value for $R_{\Theta JA}$ is calculated using equation (3) and the result can be substituted in equation (1).

The value for $R_{\Theta JC}$ is normally quoted as a single figure for a given package type based on an average die size. For a high current regulator such as the CS5205A-1 the majority of the heat is generated in the power transistor section. The value for $R_{\Theta SA}$ depends on the heat sink type, while $R_{\Theta CS}$ depends on factors such as package type, heat sink interface (is an insulator and thermal grease used?), and the contact area between the heat sink and the package. Once these calculations are complete, the maximum permissible value of $R_{\Theta JA}$ can be calculated and the proper heat sink selected. For further discussion on heat sink selection, see application note "Thermal Management for Linear Regulators."

Package Specification

PACKAGE DIMENSIONS IN mm(INCHES)

PACKAGE THERMAL DATA

Thermal Data		3L TO-220	3L D^2PAK	
$R_{\Theta JC}$	typ	1.6	1.6	°C/W
$R_{\Theta JA}$	typ	50	10 - 50*	°C/W

**Depending on thermal properties of substrate.* $R_{\Theta JA} = R_{\Theta JC} + R_{\Theta CA}$

3 Lead TO-220 (T) Straight

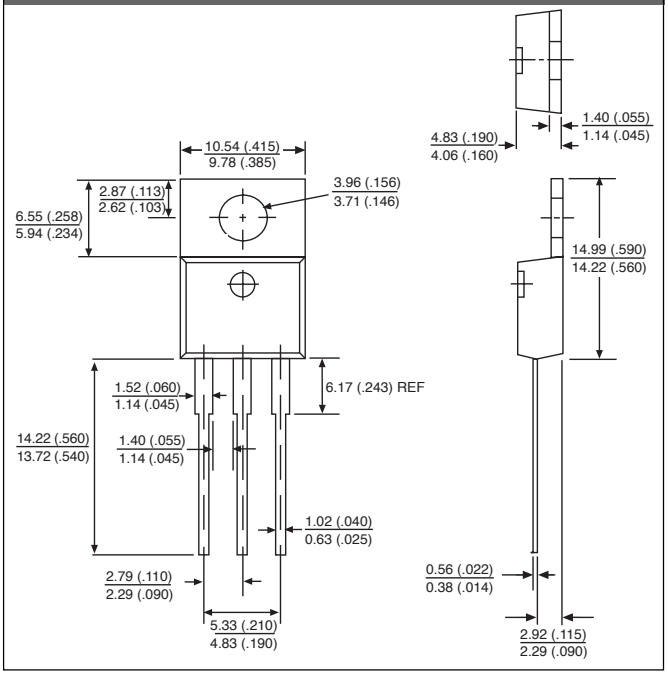

3 Lead D^2PAK (DP)

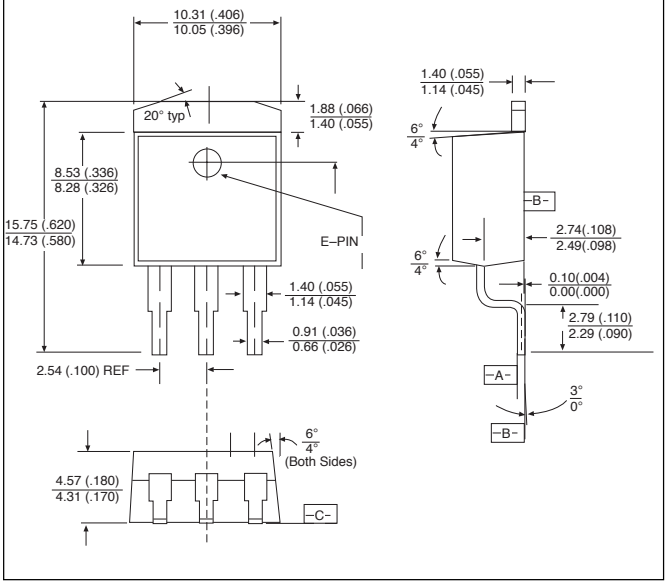

Ordering Information

Part Number	Type	Description
CS5205A-1GT3	5A, adj. output	3L TO-220 Straight
CS5205A-1GDP3	5A, adj. output	3L D^2PAK
CS5205A-1GDPR3	5A, adj. output	3L D^2PAK *(tape & reel)*

Cherry Semiconductor Corporation reserves the right to make changes to the specifications without notice. Please contact Cherry Semiconductor Corporation for the latest available information.

© 1999 Cherry Semiconductor Corporation