CS49300 Family DSP

Multi-Standard Audio Decoder Family

Features

- CS4930X: DVD Audio Sub-family
  - PES Layer decode for A/V sync
  - DVD Audio Pack Layer Support
  - Meridian Lossless Packing Specification (MLP)™
  - Dolby Digital™, Dolby Pro Logic II™
  - MPEG-2, Advanced Audio Coding Algorithm (AAC)
  - MPEG Multichannel
  - DTS Digital Surround™, DTS-ES Extended Surround™
- CS4931X: Broadcast Sub-family
  - PES Layer decode for A/V sync
  - Dolby Digital
  - MPEG-2, Advanced Audio Coding Algorithm (AAC)
  - MPEG-1 (Layers 1, 2, 3) Stereo
  - MPEG-2 (Layers 2, 3) Stereo
- CS4932X: AVR Sub-family
  - Dolby Digital, Dolby Pro Logic II
  - DTS & DTS-ES decoding with integrated DTS tables
  - Cirrus Original Surround 5.1 PCM Enhancement
  - MPEG-2, Advanced Audio Coding Algorithm (AAC)
  - MPEG Multichannel
  - MP3 (MPEG-1, Layer 3)
- CS49330: General Purpose Audio DSP
  - THX® Surround EX™ and THX® Ultra2 Cinema
  - General Purpose AVR and Broadcast Audio Decoder (MPEG Multichannel, MPEG Stereo, MP3, C.O.S.)
  - Car Audio
- Features are a super-set of the CS4923/4/5/6/7/8/9
  - 8 channel output, including dual zone output capability
  - Dynamic Channel Remapability
  - Supports up to 192 kHz Fs @ 24-bit throughput
  - Increased memory/MIPs
  - SRAM Interface for increased delay and buffer capability
  - Dual-Precision Bass Manager
  - Enhance your system functionality via firmware upgrades through the Crystal Ware™ Software Licensing Program

Description

The CS493XX is a family of multichannel audio decoders intended to supersede the CS4923/4/5/6/7/8/9 family as the leader of audio decoding in both the DVD, broadcast and receiver markets. The family will be split into parts tailored for each of these distinct market segments.

For the DVD market, parts will be offered which support Meridian Lossless Packing (MLP), Dolby Digital, Dolby Pro Logic II, MPEG Multichannel, DTS Digital Surround, DTS-ES, AAC, and subsets thereof. For the receiver market, parts will be offered which support Dolby Digital, Dolby Pro Logic II, MPEG Multichannel, DTS Digital Surround, DTS-ES, AAC, and various virtualizers and PCM enhancement algorithms such as HDCD®, DTS Neo:6™, LOGIC7®, and SRS Circle Surround II®. For the broadcast market, parts will be offered which support Dolby Digital, AAC, MPEG-1, Layers 1,2 and 3, MPEG-2, Layers 2 and 3.

Under the Crystal brand, Cirrus Logic is the only single supplier of high-performance 24-bit multi-standard audio DSP decoders, DSP firmware, and high-resolution data converters. This combination of DSPs, system firmware, and data converters simplify rapid creation of world-class high-fidelity digital audio products for the Internet age.

Ordering Information: See page 87

	APPLICATION	CORE DECODER FUNCTIONALITY
CS49300	DVD Audio	MLP, AC-3, AAC, DTS, MPEG 5.1, MP3, etc.
CS49310	Broadcast	AAC, AC-3, MPEG Stereo, MP3, etc.
CS49311	Broadcast	AAC, MPEG Stereo, MP3, etc.
CS49312	Broadcast	AC-3, MPEG Stereo, MP3, etc.
CS49325	AVR	AC-3, COS, MPEG 5.1, MP3, etc.
CS49326	AVR	AC-3, DTS, COS, MPEG 5.1, MP3, etc.
CS49329	AVR	AC-3, AAC, DTS, MPEG 5.1, MP3, etc.
CS49330	Car Audio DSP	Car Audio Code
CS49330	General Purpose	MPEG 5.1, MPEG Stereo, MP3, C.O.S., etc
CS49330	Post-Processor	DPP, THX Surround EX, THX Ultra2 Cinema

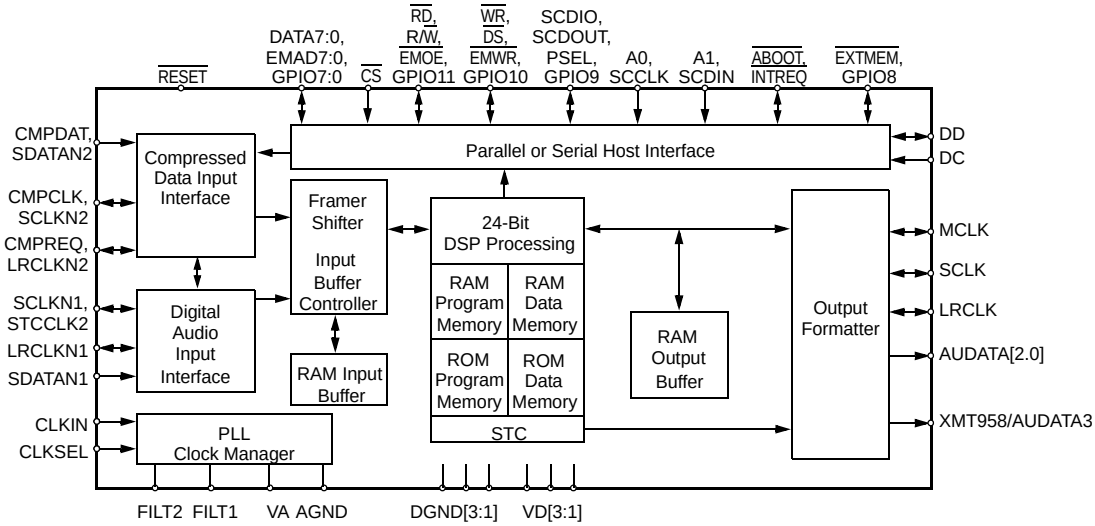

Copyright © Cirrus Logic, Inc. 2006
(All Rights Reserved)

TABLE OF CONTENTS

1. CHARACTERISTICS AND SPECIFICATIONS 7
1.1 Specified Operating Conditions 7
1.2 Absolute Maximum Ratings 7
1.3 Thermal Data 7
1.4 Digital D.C. Characteristics 8
1.5 Power Supply Characteristics 8
1.6 Switching Characteristics — $\overline{\text{RESET}}$ 9
1.7 Switching Characteristics — CLKIN 9
1.8 Switching Characteristics — Intel® Host Mode 10
1.9 Switching Characteristics — Motorola® Host Mode 12
1.10 Switching Characteristics — SPI™ Control Port 14
1.11 Switching Characteristics — I²C® Control Port 16
1.12 Switching Characteristics — Digital Audio Input 18
1.13 Switching Characteristics — Serial Bursty Data Input 20
1.14 Switching Characteristics — Parallel Data Input 21
1.15 Switching Characteristics — Digital Audio Output 22

2. FAMILY OVERVIEW 24
2.1 CS493XX Document Strategy 24
2.2 Multichannel Decoder Family of Parts 24

3. TYPICAL CONNECTION DIAGRAMS 27
3.1 Multiplexed Pins 27
3.2 Termination Requirements 27
3.3 Phase Locked Loop Filter 28

4. POWER 35
4.1 Decoupling 35
4.2 Analog Power Conditioning 35
4.3 Ground 35
4.4 Pads 35

5. CLOCKING 35

6. CONTROL 36
6.1 Serial Communication 36
6.1.1 SPI Communication 36
6.1.2 I²C Communication 38
6.1.3 INTREQ Behavior: A Special Case 41
6.2 Parallel Host Communication 44
6.2.1 Intel Parallel Host Communication Mode 46
6.2.2 Motorola Parallel Host Communication Mode 47
6.2.3 Procedures for Parallel Host Mode Communication 48

7. EXTERNAL MEMORY 51
7.1 Non-Paged Memory 51
7.2 Paged Memory 52

8. BOOT PROCEDURE & RESET 54
8.1 Host Boot 54
8.1.1 Serial Download Sequence 54
8.1.2 Parallel Download Sequence 57
8.2 Autoboot 57
8.2.1 Autoboot $\overline{\text{INTREQ}}$ Behavior 60
8.3 Decreasing Autoboot Times Using GFABT Codes (Fast Autoboot) 61
8.3.1 Design Considerations when using GFABT Codes 63

8.4 Internal Boot 63
8.5 Application Failure Boot Message 63
8.6 Resetting the CS493XX 63
8.7 External Memory Examples 64
8.7.1 Non-Paged Autoboot Memory 64
8.7.2 32 Kilobyte Paged Autoboot Memory 65
8.8 CDB49300-MEMA.0 66
9. HARDWARE CONFIGURATION 68
10. DIGITAL INPUT & OUTPUT 69
10.1 Digital Audio Formats 69
10.1.1 I^2S 69
10.1.2 Left Justified 69
10.1.3 Multichannel 69
10.2 Digital Audio Input Port 70
10.3 Compressed Data Input Port 70
10.4 Byte Wide Digital Audio Data Input 70
10.4.1 Parallel Delivery with Parallel Control 71
10.4.2 Parallel Delivery with Serial Control 71
10.5 Digital Audio Output Port 72
10.5.1 IEC60958 Output 73
11. HARDWARE CONFIGURATION 74
11.1 Address Checking 74
11.2 Input Data Hardware Configuration 74
11.2.1 Input Configuration Considerations 77
11.3 Output Data Hardware Configuration 78
11.3.1 Output Configuration Considerations 80
11.4 Creating Hardware Configuration Messages 80
12. PIN DESCRIPTIONS 82
13. ORDERING INFORMATION 87
14. PACKAGE DIMENSIONS 88
15. DOCUMENT REVISIONS 89

LIST OF FIGURES

Figure 1. RESET Timing 9
Figure 2. CLKIN with CLKSEL = VSS = PLL Enable 9
Figure 3. Intel® Parallel Host Mode Read Cycle 11
Figure 4. Intel® Parallel Host Mode Write Cycle 11
Figure 5. Motorola® Parallel Host Mode Read Cycle 13
Figure 6. Motorola® Parallel Host Mode Write Cycle 13
Figure 7. SPI Control Port Timing 15
Figure 8. I2C® Control Port Timing 17
Figure 9. Digital Audio Input Data, Master and Slave Clock Timing 19
Figure 10. Serial Compressed Data Timing 20
Figure 11. Parallel Data Timing (when not in a parallel control mode) 21
Figure 12. Digital Audio Output Data, Input and Output Clock Timing 23
Figure 13. I^2C® Control 29
Figure 14. I^2C® Control with External Memory 30
Figure 15. SPI Control 31
Figure 16. SPI Control with External Memory 32
Figure 17. Intel® Parallel Control Mode 33

Figure 18. Motorola® Parallel Control Mode 34
Figure 19. SPI Write Flow Diagram 37
Figure 20. SPI Read Flow Diagram 37
Figure 21. SPI Timing 39
Figure 22. I2C® Write Flow Diagram 40
Figure 23. I2C® Read Flow Diagram 41
Figure 24. I2C® Timing 42
Figure 24. Intel Mode, One-Byte Write Flow Diagram 46
Figure 25. Intel Mode, One-Byte Read Flow Diagram 47
Figure 26. Motorola Mode, One-Byte Write Flow Diagram 48
Figure 27. Motorola Mode, One-Byte Read Flow Diagram 48
Figure 28. Typical Parallel Host Mode Control Write Sequence Flow Diagram 49
Figure 29. Typical Parallel Host Mode Control Read Sequence Flow Diagram 50
Figure 30. External Memory Interface 53
Figure 31. External Memory Read (16-bit address) 53
Figure 32. External Memory Write (16-bit address) 53
Figure 33. Typical Serial Boot and Download Procedure 55
Figure 34. Typical Parallel Boot and Download Procedure 56
Figure 35. Autoboot Timing Diagram 58
Figure 36. Autoboot Sequence 59
Figure 37. Autoboot INTREQ Behavior 60
Figure 38. Fast Autoboot Sequence Using GFABT Codes 62
Figure 39. Performing a Reset 64
Figure 40. Non-Paged Memory 65
Figure 41. Example Contents of a Paged 32 Kilobytes External Memory 66
Figure 42. CDB49300-MEMA.0 Daughter Card for the CDB4923/30-REV-A.0 67
Figure 43. I2S Format 69
Figure 44. Left Justified Format (Rising Edge Valid SCLK) 69
Figure 45. Multichannel Format 70

LIST OF TABLES

Table 1. PLL Filter Component Values 28
Table 2. Host Modes 36
Table 3. SPI Communication Signals 36
Table 4. I2C® Communication Signals 38
Table 5. Parallel Input/Output Registers 45
Table 6. Intel Mode Communication Signals 46
Table 7. Motorola Mode Communication Signals 47
Table 8. Memory Interface Pins 51
Table 9. Boot Write Messages 54
Table 10. Boot Read Messages 54
Table 11. Reduced Autoboot Times using GFABT8.LD, GFABT6.LD, and GFABT4.LD on a CS493264-CL Rev. G DSP 61
Table 12. Memory Requirements for Example 5.1, 6.1 and 7.1 Channel Systems 65
Table 13. Digital Audio Input Port 70
Table 14. Compressed Data Input Port 70
Table 15. Digital Audio Output Port 72
Table 16. MCLK/SCLK Master Mode Ratios 72
Table 17. Output Channel Mapping 72
Table 18. Input Data Type Configuration (Input Parameter A) 75
Table 19. Input Data Format Configuration (Input Parameter B) 75

Table 20. Input SCLK Polarity Configuration (Input Parameter C) 77
Table 21. Input FIFO Setup Configuration (Input Parameter D) 77
Table 22. Output Clock Configuration (Parameter A) 78
Table 23. Output Data Format Configuration (Parameter B) 78
Table 24. Output MCLK Configuration (Parameter C) 79
Table 25. Output SCLK Configuration (Parameter D) 79
Table 26. Output SCLK Polarity Configuration (Parameter E) 79
Table 27. Example Values to be Sent to CS493XX After Download or Soft Reset..... 81

Contacting Cirrus Logic Support

For a complete listing of Direct Sales, Distributor, and Sales Representative contacts, visit the Cirrus Logic web site at:
http://www.cirrus.com

IMPORTANT NOTICE

Cirrus Logic, Inc. and its subsidiaries ("Cirrus") believe that the information contained in this document is accurate and reliable. However, the information is subject to change without notice and is provided "AS IS" without warranty of any kind (express or implied). Customers are advised to obtain the latest version of relevant information to verify, before placing orders, that information being relied on is current and complete. All products are sold subject to the terms and conditions of sale supplied at the time of order acknowledgment, including those pertaining to warranty, indemnification, and limitation of liability. No responsibility is assumed by Cirrus for the use of this information, including use of this information as the basis for manufacture or sale of any items, or for infringement of patents or other rights of third parties. This document is the property of Cirrus and by furnishing this information, Cirrus grants no license, express or implied under any patents, mask work rights, copyrights, trademarks, trade secrets or other intellectual property rights. Cirrus owns the copyrights associated with the information contained herein and gives consent for copies to be made of the information only for use within your organization with respect to Cirrus integrated circuits or other products of Cirrus. This consent does not extend to other copying such as copying for general distribution, advertising or promotional purposes, or for creating any work for resale.

CERTAIN APPLICATIONS USING SEMICONDUCTOR PRODUCTS MAY INVOLVE POTENTIAL RISKS OF DEATH, PERSONAL INJURY, OR SEVERE PROPERTY OR ENVIRONMENTAL DAMAGE ("CRITICAL APPLICATIONS"). CIRRUS PRODUCTS ARE NOT DESIGNED, AUTHORIZED OR WARRANTED FOR USE IN AIRCRAFT SYSTEMS, MILITARY APPLICATIONS, PRODUCTS SURGICALLY IMPLANTED INTO THE BODY, AUTOMOTIVE SAFETY OR SECURITY DEVICES, LIFE SUPPORT PRODUCTS OR OTHER CRITICAL APPLICATIONS. INCLUSION OF CIRRUS PRODUCTS IN SUCH APPLICATIONS IS UNDERSTOOD TO BE FULLY AT THE CUSTOMER'S RISK AND CIRRUS DISCLAIMS AND MAKES NO WARRANTY, EXPRESS, STATUTORY OR IMPLIED, INCLUDING THE IMPLIED WARRANTIES OF MERCHANTABILITY AND FITNESS FOR PARTICULAR PURPOSE, WITH REGARD TO ANY CIRRUS PRODUCT THAT IS USED IN SUCH A MANNER. IF THE CUSTOMER OR CUSTOMER'S CUSTOMER USES OR PERMITS THE USE OF CIRRUS PRODUCTS IN CRITICAL APPLICATIONS, CUSTOMER AGREES, BY SUCH USE, TO FULLY INDEMNIFY CIRRUS, ITS OFFICERS, DIRECTORS, EMPLOYEES, DISTRIBUTORS AND OTHER AGENTS FROM ANY AND ALL LIABILITY, INCLUDING ATTORNEYS' FEES AND COSTS, THAT MAY RESULT FROM OR ARISE IN CONNECTION WITH THESE USES.

Cirrus Logic, Cirrus, and the Cirrus Logic logo designs are trademarks of Cirrus Logic, Inc. All other brand and product names in this document may be trademarks or service marks of their respective owners.

Dolby, Dolby Digital, AC-3, Pro Logic, Dolby Surround, Surround EX, Virtual Dolby Digital, MLP, MLP Lossless, AAC, the "AAC" logo, the "Dolby Digital" logo, "Dolby Digital with Pro Logic II" logo, "Dolby" and the double-"D" symbol are trademarks or registered trademarks of Dolby Laboratories, Inc. Supply of an implementation of Dolby Technology does not convey a license nor imply a right under any patent, or any other industrial or Intellectual Property Right of Dolby Laboratories, to use the Implementation in any finished end-user or ready-to-use final product. It is hereby notified that a license for such use is required from Dolby Laboratories.

DTS, DTS Digital Surround, DTS-ES Extended Surround, DTS Neo:6, DTS Virtual 5.1, the "DTS", "DTS-ES", "DTS Virtual 5.1" logos are trademarks or registered trademarks of the Digital Theater Systems, Inc. It is hereby notified that a third-party license from DTS is necessary to distribute software of DTS in any finished end-user or ready-to-use final product.

THX® Technology by Lucasarts Entertainment Company Corporation. THX is a registered trademark of Lucasarts Entertainment Company Corporation. Home THX is a registered trademark of Lucasfilm Ltd.

HDCD®, HDCD®, High Definition Compatible Digital® and Pacific Microsonics™Inc. are either registered trademarks or trademarks of Microsoft Corporation in the United States and/or other countries. HDCD technology cannot be used or distributed without a license from Microsoft Licensing, Inc.

The "MPEG Logo" is a registered trademark of Philips Electronics N.V.

In regards to the MP3 capable functionality of the CS49300 Family DSP (via downloading of mp3_493xxx_vv.ld and mp3e_493xxx_vv.ld application codes) the following statements are applicable: "MPEG Layer-3 (MP3) audio coding technology licensed from Fraunhofer Gesellschaft and Thomson multimedia. Supply of this product only conveys a license for personal, private and non-commercial use."

SRS, Circle Surround, and TruSurround are registered trademarks of SRS Labs, Inc. The CIRCLE SURROUND TECHNOLOGY rights incorporated in the Cirrus Logic chip are owned by SRS Labs, Inc. and by Valence Technology Ltd., and licensed to Cirrus Logic, Inc.
Users of any Cirrus Logic chip containing enabled CIRCLE SURROUND TECHNOLOGY® (i.e., CIRCLE SURROUND® LICENSEES) must first sign a license to purchase production quantities for consumer electronics applications which may be granted upon submission of a preproduction sample to, and the satisfactory passing of performance verification tests performed by SRS Labs, Inc., or Valence Technology Ltd. E-mail requests for performance specifications and testing rate schedule may be made to cslicense@srslabs.com. SRS Labs, Inc. and Valence Technology, Ltd., reserve the right to decline a use license for any submission that does not pass performance specifications or is not in the consumer electronics classification.

All equipment manufactured using any Cirrus Logic chip containing enabled CIRCLE SURROUND® TECHNOLOGY must carry the Circle Surround® logo on the front panel in a manner approved in writing by SRS Labs, Inc., or Valence Technology Ltd. If the Circle Surround® logo is printed in users manuals, service manuals or advertisements, it must appear in a form approved in writing by SRS Labs, Inc., or Valence Technology, Ltd. The rear panel of Circle Surround® products, users manuals, service manuals, and all advertising must all carry the legends as described in LICENSOR'S most current version of the CIRCLE SURROUND Trademark Usage Manual.

Intel is a registered trademark of Intel Corporation.

Motorola and SPI are registered trademarks of Motorola, Inc.

Harman VMAx and LOGIC7 are registered trademarks of Harman International Industries, Inc.

I^2C is a registered trademark of Philips Semiconductor.

1. CHARACTERISTICS AND SPECIFICATIONS

(All Min/Max characteristics and specifications are guaranteed over the Specified Operating Conditions. Typical performance characteristics and specifications are derived from measurements taken at nominal supply voltages and T_A = 25°C.)

1.1. Specified Operating Conditions

(AGND, DGND = 0 V; all voltages with respect to 0 V)

Parameter		Symbol	Min	Typ	Max	Unit
DC power supplies:	Positive digital	VD	2.37	2.5	2.63	V
	Positive analog	VA	2.37	2.5	2.63	V
	||VA| – |VD||		-	-	0.3	V
Ambient operating temperature		T_A	0	-	70	°C

1.2. Absolute Maximum Ratings

(AGND, DGND = 0 V; all voltages with respect to 0 V)

Parameter		Symbol	Min	Max	Unit
DC power supplies:	Positive digital	VD	–0.3	2.75	V
	Positive analog	VA	–0.3	2.75	V
	||VA| – |VD||		-	0.3	V
Input current, any pin except supplies		I_{in}	-	±10	mA
Digital input voltage		V_{IND}	–0.3	3.63	V
Storage temperature		T_{stg}	–65	150	°C

CAUTION: Operation at or beyond these limits may result in permanent damage to the device. Normal operation is not guaranteed at these extremes.

1.3. Thermal Data

(VA, VD[3:1] = 2.5 V ±5%; measurements performed under operating conditions)

Parameter	Symbol	Min	Typ	Max	Unit
Thermal Resistance (Junction to Ambient)					
Two-layer Board (Note 1)	θ_{ja}	-	-	44.5	°C / Watt
Four-layer Board (Note 2)		-	-	36.3	
Thermal Resistance (Junction to Top of Package)					
Two-layer Board (Note 1)	ψ_{jt}	-	-	2.0	°C / Watt
Four-layer Board (Note 2)		-	-	3.8	

Notes:
1. Two-layer board is specified as a 76 mm X 114 mm, 1.6 mm thick FR-4 material with 1-oz copper covering 20 % of the top & bottom layers.
2. Four-layer board is specified as a 76 mm X 114 mm, 1.6 mm thick FR-4 material with 1-oz copper covering 20 % of the top & bottom layers and 0.5-oz copper covering 90 % of the internal power plane & ground plane layers.
3. To calculate the die temperature for a given power dissipation

   T_j = Ambient Temperature + [(Power Dissipation in Watts) * θ_{ja}]
4. To calculate the case temperature for a given power dissipation

   $T_c = T_j$ - [(Power Dissipation in Watts) * ψ_{jt}]

1.4. Digital D.C. Characteristics

(VA, VD[3:1] = 2.5 V ±5%; measurements performed under static conditions.)

Parameter	Symbol	Min	Typ	Max	Unit
High-level input voltage	V_{IH}	2.0	-	-	V
Low-level input voltage	V_{IL}	-	-	0.8	V
High-level output voltage at I_O = –2.0 mA	V_{OH}	VD × 0.9	-	-	V
Low-level output voltage at I_O = 2.0 mA	V_{OL}	-	-	VD × 0.11	V
Input leakage current	I_{in}	-	-	1.0	µA

1.5. Power Supply Characteristics

(VA, VD[3:1] = 2.5 V ±5%; measurements performed under operating conditions)

Parameter		Symbol	Min	Typ	Max	Unit
Power supply current:	Digital operating: VD[3:1]		-	200	310	mA
	Analog operating: VA		-	1.7	4	mA

1.6. Switching Characteristics — $\overline{\text{RESET}}$

(VA, VD[3:1] = 2.5 V ±5%; Inputs: Logic 0 = DGND, Logic 1 = VD, C_L = 20 pF)

Parameter		Symbol	Min	Max	Unit
$\overline{\text{RESET}}$ minimum pulse width low (-CL)	(Note 5)	T_{rstl}	100	-	µs
$\overline{\text{RESET}}$ minimum pulse width low (-IL)	(Note 5)	T_{rstl}	530	-	µs
All bidirectional pins high-Z after $\overline{\text{RESET}}$ low	(Note 6)	T_{rst2z}	-	100	ns
Configuration bits setup before $\overline{\text{RESET}}$ high		T_{rstsu}	50	-	ns
Configuration bits hold after $\overline{\text{RESET}}$ high		T_{rsthld}	15	-	ns

Notes: 5. The minimum $\overline{\text{RESET}}$ pulse listed above is valid only when using the recommended pull-up/pull-down resistors on the $\overline{\text{RD}}$, $\overline{\text{WR}}$, PSEL and ABOOT mode pins. For Rev. D and older parts, pull-up/pull-down resistors may be 4.7 k or 3.3 k. For Rev. E and newer parts, pull-up/pull-down resistors must be 3.3 k.

6. This specification is characterized but not production tested.

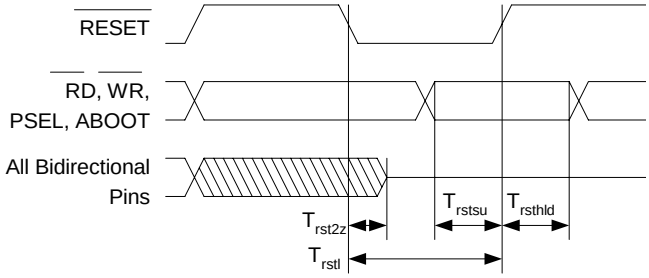

Figure 1. RESET Timing

1.7. Switching Characteristics — CLKIN

(VA, VD[3:1] = 2.5 V ±5%; Inputs: Logic 0 = DGND, Logic 1 = VD, C_L = 20 pF, PLL Enabled)

Parameter	Symbol	Min	Max	Unit
CLKIN period for internal DSP clock mode	T_{clki}	35	3800	ns
CLKIN high time for internal DSP clock mode	T_{clkih}	14	-	ns
CLKIN low time for internal DSP clock mode	T_{clkil}	14	-	ns

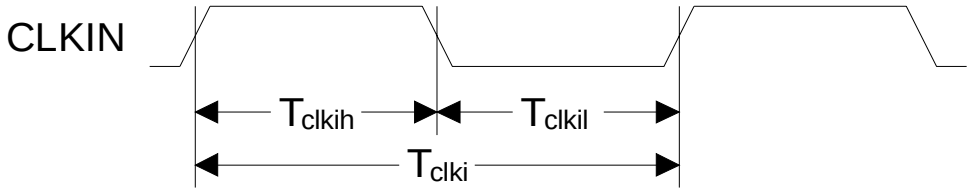

Figure 2. CLKIN with CLKSEL = VSS = PLL Enable

1.8. Switching Characteristics — Intel® Host Mode

(VA, VD[3:1] = 2.5 V ±5%; Inputs: Logic 0 = DGND, Logic 1 = VD, C_L = 20 pF)

Parameter		Symbol	Min	Max	Unit
Address setup before $\overline{CS}$ and $\overline{RD}$ low or $\overline{CS}$ and $\overline{WR}$ low		T_{ias}	5	-	ns
Address hold time after $\overline{CS}$ and $\overline{RD}$ low or $\overline{CS}$ and $\overline{WR}$ low		T_{iah}	5	-	ns
Delay between $\overline{RD}$ then $\overline{CS}$ low or $\overline{CS}$ then $\overline{RD}$ low		T_{icdr}	0	∞	ns
Data valid after $\overline{CS}$ and $\overline{RD}$ low	(Note 3)	T_{idd}	-	21	ns
$\overline{CS}$ and $\overline{RD}$ low for read	(Note 1)	T_{irpw}	DCLKP + 10	-	ns
Data hold time after $\overline{CS}$ or $\overline{RD}$ high		T_{idhr}	5	-	ns
Data high-Z after $\overline{CS}$ or $\overline{RD}$ high	(Note 2)	T_{idis}	-	22	ns
$\overline{CS}$ or $\overline{RD}$ high to $\overline{CS}$ and $\overline{RD}$ low for next read	(Note 1)	T_{ird}	2*DCLKP + 10	-	ns
$\overline{CS}$ or $\overline{RD}$ high to $\overline{CS}$ and $\overline{WR}$ low for next write	(Note 1)	T_{irdtw}	2*DCLKP + 10	-	ns
Delay between $\overline{WR}$ then $\overline{CS}$ low or $\overline{CS}$ then $\overline{WR}$ low		T_{icdw}	0	∞	ns
Data setup before $\overline{CS}$ or $\overline{WR}$ high		T_{idsu}	20	-	ns
$\overline{CS}$ and $\overline{WR}$ low for write	(Note 1)	T_{iwpw}	DCLKP + 10	-	ns
Data hold after $\overline{CS}$ or $\overline{WR}$ high		T_{idhw}	5	-	ns
$\overline{CS}$ or $\overline{WR}$ high to $\overline{CS}$ and $\overline{RD}$ low for next read	(Note 1)	T_{iwtrd}	2*DCLKP + 10	-	ns
$\overline{CS}$ or $\overline{WR}$ high to $\overline{CS}$ and $\overline{WR}$ low for next write	(Note 1)	T_{iwd}	2*DCLKP + 10	-	ns

Notes: 1. Certain timing parameters are normalized to the DSP clock, DCLKP, in nanoseconds. DCLKP = 1/DCLK. The DSP clock can be defined as follows:

External CLKIN Mode:
DCLK == CLKIN/4 before and during boot
DCLK == CLKIN after boot

Internal Clock Mode:
DCLK == 10MHz before and during boot, i.e. DCLKP == 100ns
DCLK == 65 MHz after boot, i.e. DCLKP == 15.4ns

It should be noted that DCLK for the internal clock mode is application specific. The application code users guide should be checked to confirm DCLK for the particular application.

2. This specification is characterized but not production tested. A 470 ohm pull-up resistor was used for characterization to minimize the effects of external bus capacitance.
3. See T_{idd} from Intel Host Mode in Table 6 on page 46

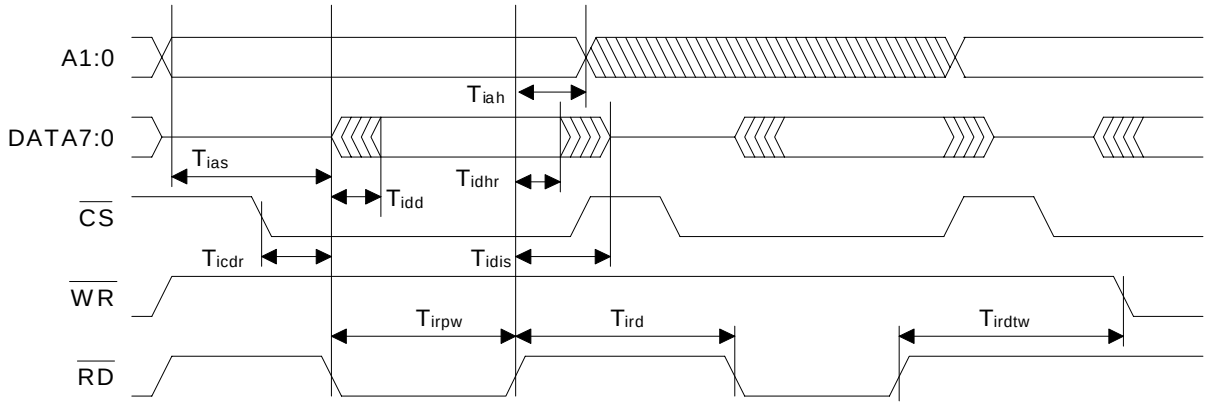

Figure 3. Intel® Parallel Host Mode Read Cycle

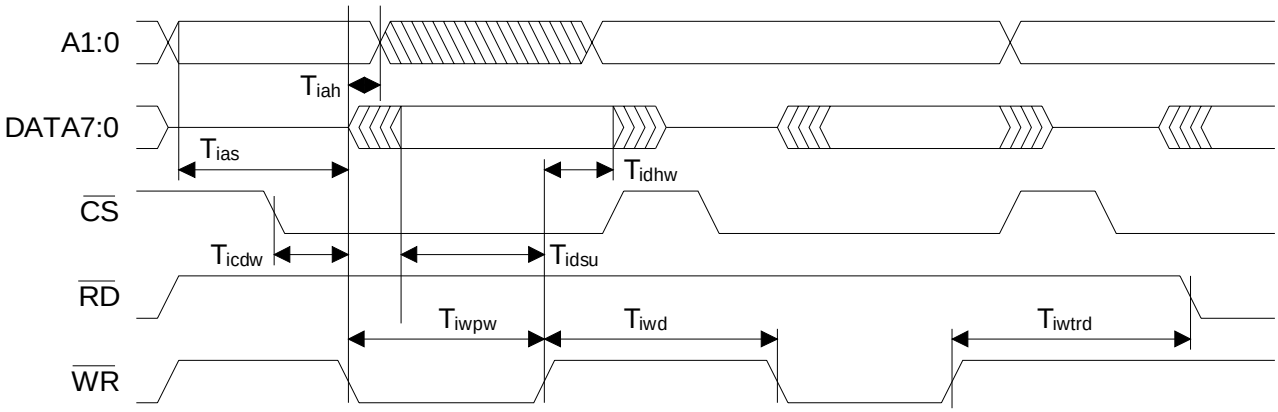

Figure 4. Intel® Parallel Host Mode Write Cycle

1.9. Switching Characteristics — Motorola® Host Mode

(VA, VD[3:1] = 2.5 V ±5%; Inputs: Logic 0 = DGND, Logic 1 = VD, C_L = 20 pF)

Parameter	Symbol	Min	Max	Unit
Address setup before $\overline{CS}$ and $\overline{DS}$ low	T_{mas}	5	-	ns
Address hold time after $\overline{CS}$ and $\overline{DS}$ low	T_{mah}	5	-	ns
Delay between $\overline{DS}$ then $\overline{CS}$ low or $\overline{CS}$ then $\overline{DS}$ low	T_{mcdr}	0	∞	ns
Data valid after $\overline{CS}$ and $\overline{DS}$ low with R/$\overline{W}$ high (Note 3)	T_{mdd}	-	21	ns
$\overline{CS}$ and $\overline{DS}$ low for read (Note 1)	T_{mrpw}	DCLKP + 10	-	ns
Data hold time after $\overline{CS}$ or $\overline{DS}$ high after read	T_{mdhr}	5	-	ns
Data high-Z after $\overline{CS}$ or $\overline{DS}$ high after read (Note 2)	T_{mdis}	-	22	ns
$\overline{CS}$ or $\overline{DS}$ high to $\overline{CS}$ and $\overline{DS}$ low for next read (Note 1)	T_{mrd}	2*DCLKP + 10	-	ns
$\overline{CS}$ or $\overline{DS}$ high to $\overline{CS}$ and $\overline{DS}$ low for next write (Note 1)	T_{mrdtw}	2*DCLKP + 10	-	ns
Delay between $\overline{DS}$ then $\overline{CS}$ low or $\overline{CS}$ then $\overline{DS}$ low	T_{mcdw}	0	∞	ns
Data setup before $\overline{CS}$ or $\overline{DS}$ high	T_{mdsu}	20	-	ns
$\overline{CS}$ and $\overline{DS}$ low for write (Note 1)	T_{mwpw}	DCLKP + 10	-	ns
R/$\overline{W}$ setup before $\overline{CS}$ AND $\overline{DS}$ low	T_{mrwsu}	5	-	ns
R/$\overline{W}$ hold time after $\overline{CS}$ or $\overline{DS}$ high	T_{mrwhld}	5	-	ns
Data hold after $\overline{CS}$ or $\overline{DS}$ high	T_{mdhw}	5	-	ns
$\overline{CS}$ or $\overline{DS}$ high to $\overline{CS}$ and $\overline{DS}$ low with R/$\overline{W}$ high for next read (Note 1)	T_{mwtrd}	2*DCLKP + 10	-	ns
$\overline{CS}$ or $\overline{DS}$ high to $\overline{CS}$ and $\overline{DS}$ low for next write (Note 1)	T_{mwd}	2*DCLKP + 10	-	ns

Notes: 1. Certain timing parameters are normalized to the DSP clock, DCLKP, in nanoseconds. DCLKP = 1/DCLK. The DSP clock can be defined as follows:

External CLKIN Mode:
DCLK == CLKIN/4 before and during boot
DCLK == CLKIN after boot

Internal Clock Mode:
DCLK == 10MHz before and during boot, i.e. DCLKP == 100ns
DCLK == 65 MHz after boot, i.e. DCLKP == 15.4ns

It should be noted that DCLK for the internal clock mode is application specific. The application code users guide should be checked to confirm DCLK for the particular application.

2. This specification is characterized but not production tested. A 470 ohm pull-up resistor was used for characterization to minimize the effects of external bus capacitance.
3. See T_{mdd} from Motorola Host Mode in Table 7 on page 47

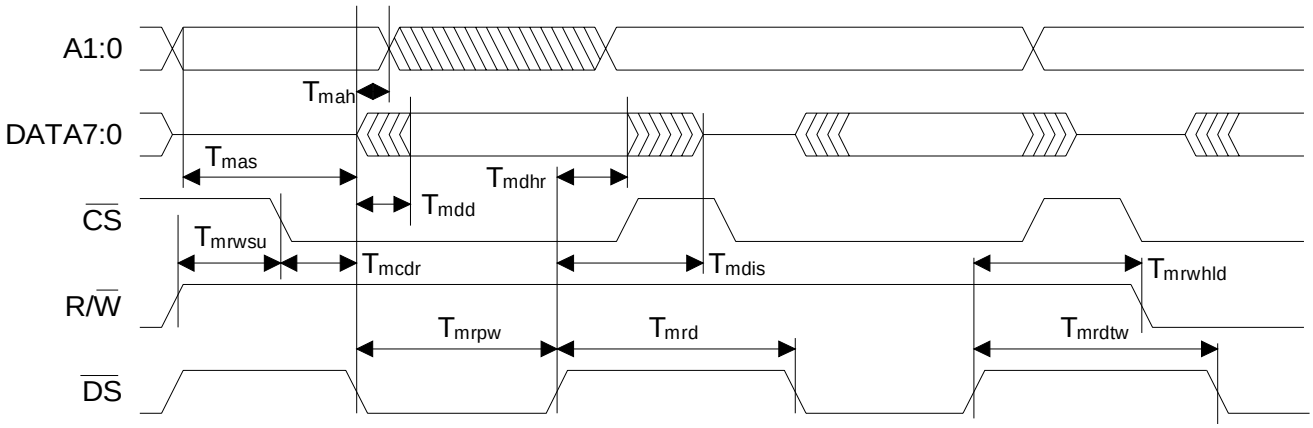

Figure 5. Motorola® Parallel Host Mode Read Cycle

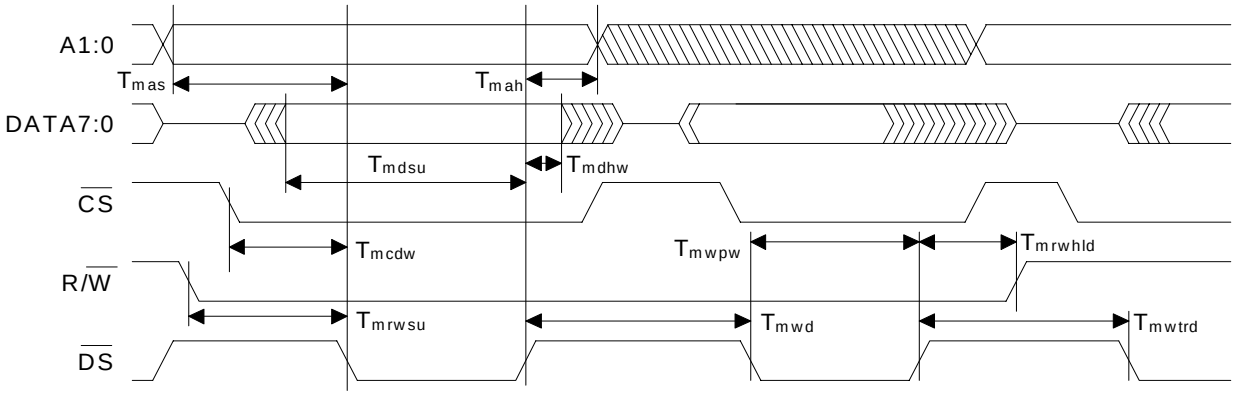

Figure 6. Motorola® Parallel Host Mode Write Cycle

1.10. Switching Characteristics — SPI™ Control Port

(VA, VD[3:1] = 2.5 V ±5%; Inputs: Logic 0 = DGND, Logic 1 = VD, C_L = 20 pF)

Parameter		Symbol	Min	Max	Units
SCCLK clock frequency	(Note 1)	f_{sck}	-	2000	kHz
$\overline{CS}$ falling to SCCLK rising		t_{css}	20	-	ns
Rise time of SCCLK line	(Note 7)	t_r	-	50	ns
Fall time of SCCLK lines	(Note 7)	t_f	-	50	ns
SCCLK low time		t_{scl}	150	-	ns
SCCLK high time		t_{sch}	150	-	ns
Setup time SCDIN to SCCLK rising		t_{cdisu}	50	-	ns
Hold time SCCLK rising to SCDIN	(Note 2)	t_{cdih}	50	-	ns
Transition time from SCCLK to SCDOUT valid	(Note 3)	t_{scdov}	-	40	ns
Time from SCCLK rising to $\overline{INTREQ}$ rising	(Note 4)	t_{scrh}	-	200	ns
Rise time for $\overline{INTREQ}$	(Note 4)	t_{rr}	-	(Note 6)	ns
Hold time for $\overline{INTREQ}$ from SCCLK rising	(Note 5, 7)	t_{scrl}	0	-	ns
Time from SCCLK falling to $\overline{CS}$ rising		t_{sccsh}	20	-	ns
High time between active $\overline{CS}$		t_{csht}	200	-	ns
Time from $\overline{CS}$ rising to SCDOUT high-Z	(Note 7)	t_{cscdo}		20	ns

Notes:
1. The specification f_{sck} indicates the maximum speed of the hardware. The system designer should be aware that the actual maximum speed of the communication port may be limited by the software. The relevant application code user's manual should be consulted for the software speed limitations.
2. Data must be held for sufficient time to bridge the 50 ns transition time of SCCLK.
3. SCDOUT should *not* be sampled during this time period.
4. $\overline{INTREQ}$ goes high only if there is no data to be read from the DSP at the rising edge of SCCLK for the second-to-last bit of the last byte of data during a read operation as shown.
5. If $\overline{INTREQ}$ goes high as indicated in (Note 4), then $\overline{INTREQ}$ is guaranteed to remain high until the next rising edge of SCCLK. If there is more data to be read at this time, $\overline{INTREQ}$ goes active low again. Treat this condition as a new read transaction. Raise chip select to end the current read transaction and then drop it, followed by the 7-bit address and the R/$\overline{W}$ bit (set to 1 for a read) to start a new read transaction.
6. With a 3.3k Ohm pull-up resistor this value is typically 260ns. As this pin is open drain adjusting the pull up value will affect the rise time.
7. This time is by design and not tested.

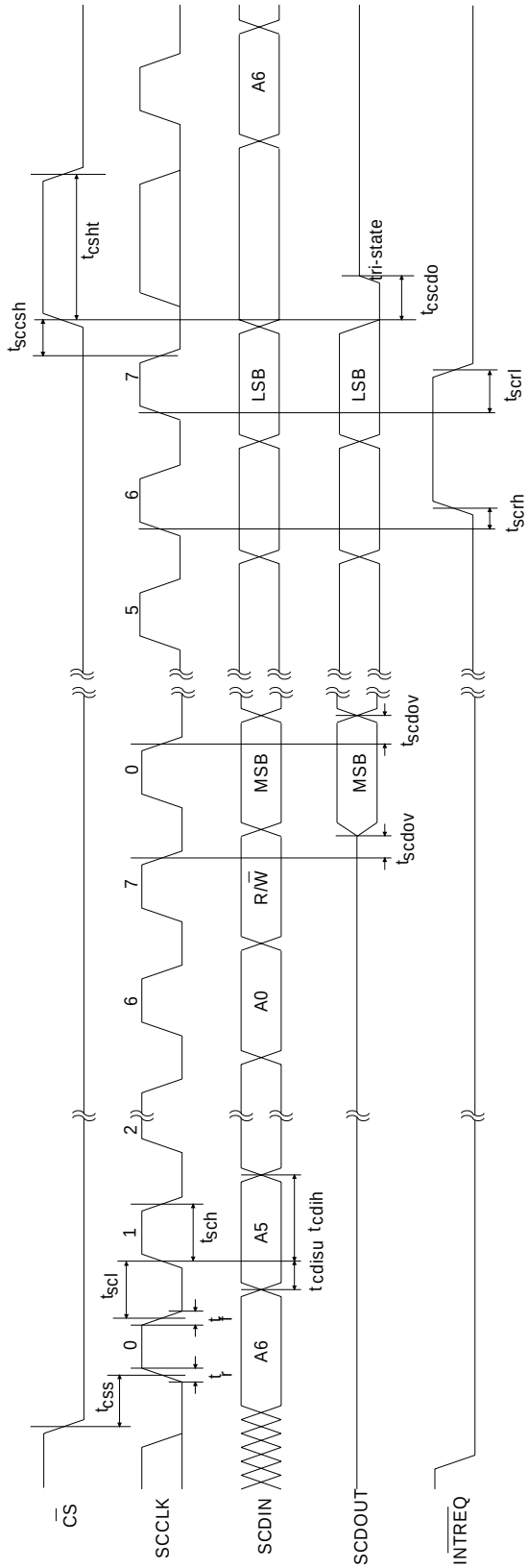

Figure 7. SPI Control Port Timing

1.11. Switching Characteristics — I²C® Control Port

(VA, VD[3:1] = 2.5 V ±5%; Inputs: Logic 0 = DGND, Logic 1 = VD, C_L = 20 pF)

Parameter		Symbol	Min	Max	Units
SCCLK clock frequency	(Note 1)	f_{scl}		400	kHz
Bus free time between transmissions		t_{buf}	4.7		µs
Start-condition hold time (prior to first clock pulse)		t_{hdst}	4.0		µs
Clock low time		t_{low}	1.2		µs
Clock high time		t_{high}	1.0		µs
SCDIO setup time to SCCLK rising		t_{sud}	250		ns
SCDIO hold time from SCCLK falling	(Note 2)	t_{hdd}	0		µs
Rise time of SCCLK	(Note 3), (Note 7)	t_r		50	ns
Fall time of SCCLK	(Note 7)	t_f		300	ns
Time from SCCLK falling to CS493XX ACK		t_{sca}		40	ns
Time from SCCLK falling to SCDIO valid during read operation		t_{scsdv}		40	ns
Time from SCCLK rising to $\overline{\text{INTREQ}}$ rising	(Note 4)	t_{scrh}		200	ns
Hold time for $\overline{\text{INTREQ}}$ from SCCLK rising	(Note 5)	t_{scrl}	0		ns
Rise time for $\overline{\text{INTREQ}}$	(Note 6)	t_{rr}		**	ns
Setup time for stop condition		t_{susp}	4.7		µs

Notes:. 1. The specification f_{scl} indicates the maximum speed of the hardware. The system designer should be aware that the actual maximum speed of the communication port may be limited by the software. The relevant application code user's manual should be consulted for the software speed limitations.

2. Data must be held for sufficient time to bridge the 300-ns transition time of SCCLK. This hold time is by design and not tested.
3. This rise time is *shorter* than that recommended by the I²C specifications. For more information, see Section 6.1, "Serial Communication" on page 36.
4. $\overline{\text{INTREQ}}$ goes high only if there is no data to be read from the DSP at the rising edge of SCCLK for the last data bit of the last byte of data during a read operation as shown.
5. If $\overline{\text{INTREQ}}$ goes high as indicated in Note 8, then $\overline{\text{INTREQ}}$ is guaranteed to remain high until the next rising edge of SCCLK. If there is more data to be read at this time, $\overline{\text{INTREQ}}$ goes active low again. Treat this condition as a new read transaction. Send a new start condition followed by the 7-bit address and the R/$\overline{\text{W}}$ bit (set to 1 for a read). This time is by design and is not tested.
6. With a 3.3k Ohm pull-up resistor this value is typically 260ns. As this pin is open drain adjusting the pull up value will affect the rise time.
7. This time is by design and not tested.

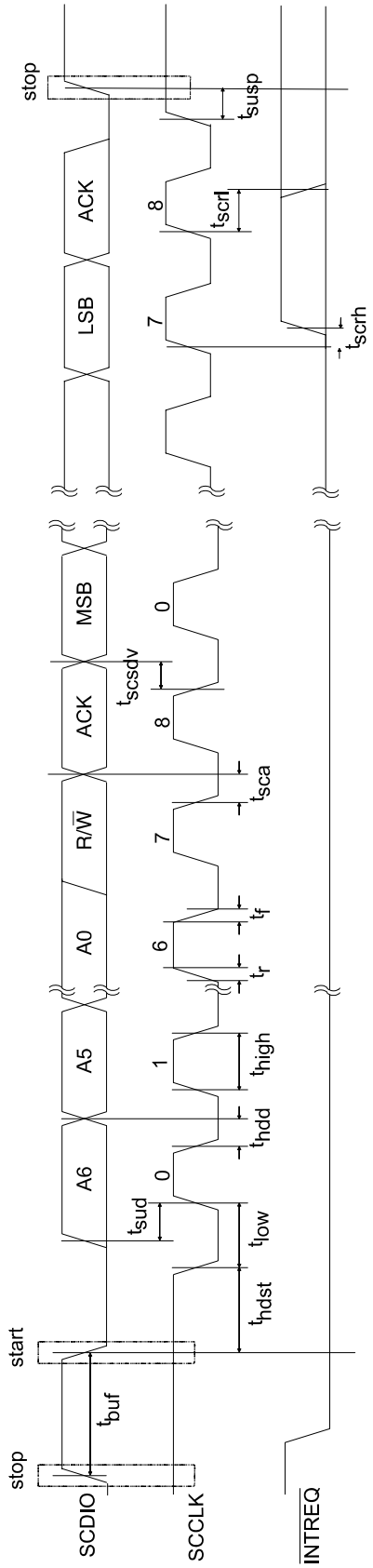

Figure 8. I²C® Control Port Timing

1.12. Switching Characteristics — Digital Audio Input

(VA, VD[3:1] = 2.5 V ±5%; Inputs: Logic 0 = DGND, Logic 1 = VD, C_L = 20 pF)

Parameter		Symbol	Min	Max	Unit
SCLKN1(2) period for both Master and Slave mode	(Note 1)	T_{sclki}	40	-	ns
SCLKN1(2) duty cycle for Master and Slave mode	(Note 1)		45	55	%
Master Mode	(Note 1, 2)				
LRCLKN1(2) delay after SCLKN1(2) transition	(Note 3)	T_{lrds}	-	10	ns
SDATAN1(2) setup to SCLKN1(2) transition	(Note 4)	T_{sdsum}	10	-	ns
SDATAN1(2) hold time after SCLKN1(2) transition	(Note 4)	T_{sdhm}	5	-	ns
Slave Mode	(Note 5)				
Time from active edge of SCLKN1(2) to LRCLKN1(2) transition		T_{stlr}	10	-	ns
Time from LRCLKN1(2) transition to SCLKN1(2) active edge		T_{lrts}	10	-	ns
SDATAN1(2) setup to SCLKN1(2) transition	(Note 4)	T_{sdsus}	5	-	ns
SDATAN1(2) hold time after SCLKN1(2) transition	(Note 4)	T_{sdhs}	5	-	ns

Notes:
1. Master mode timing specifications are characterized, not production tested.
2. Master mode is defined as the CS493XX driving LRCLKN1(2) and SCLKN1(2). Master or Slave mode can be programmed.
3. This timing parameter is defined from the non-active edge of SCLKN1(2). The active edge of SCLKN1(2) is the point at which the data is valid.
4. This timing parameter is defined from the active edge of SCLKN1(2). The active edge of SCLKN1(2) is the point at which the data is valid.
5. Slave mode is defined as SCLKN1(2) and LRCLKN1(2) being driven by an external source.

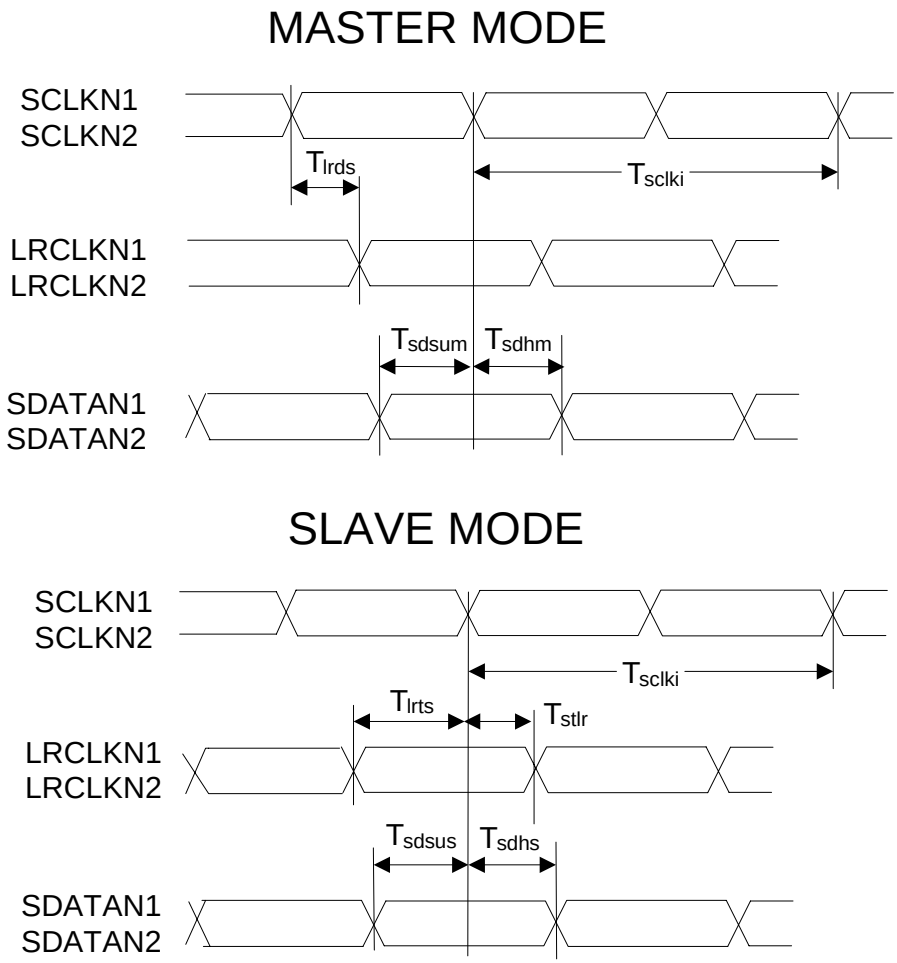

Figure 9. Digital Audio Input Data, Master and Slave Clock Timing

1.13. Switching Characteristics — Serial Bursty Data Input

(VA, VD[3:1] = 2.5 V ±5%; Inputs: Logic 0 = DGND, Logic 1 = VD, C_L = 20 pF)

Parameter	Symbol	Min	Max	Unit
Serial compressed data clock CMPCLK period	T_{cmpclk}	-	27	MHz
CMPDAT setup before CMPCLK high	T_{cmpsu}	5	-	ns
CMPDAT hold after CMPCLK high	T_{cmphld}	3	-	ns
Delay from falling edge of CMPREQ to CMPCLK rising edge	T_{reqclk}	0	-	ns

Notes: 1. CMPREQ signal is asynchronous to CLKIN and can change at any time relative to CLKIN.

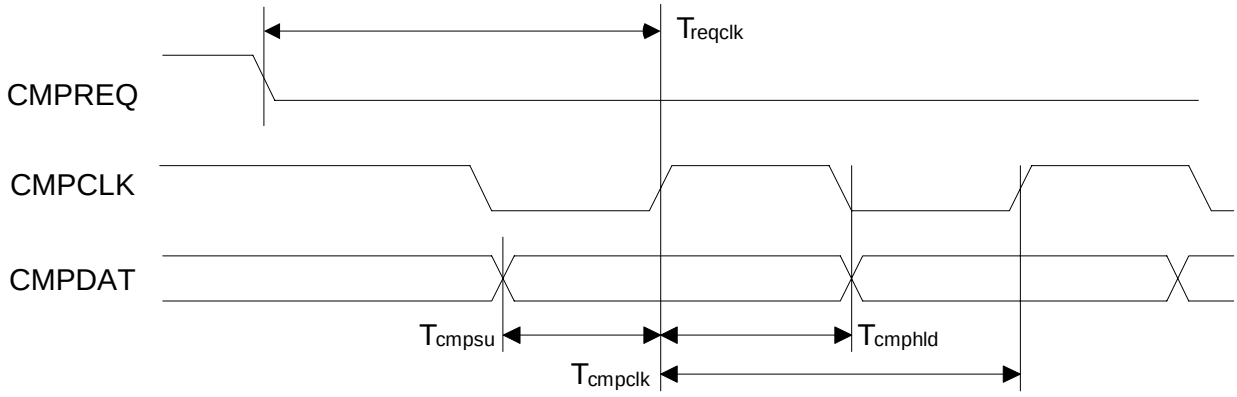

Figure 10. Serial Compressed Data Timing

1.14. Switching Characteristics — Parallel Data Input

(VA, VD[3:1] = 2.5 V ±5%; Inputs: Logic 0 = DGND, Logic 1 = VD, C_L = 20 pF)

Parameter	Symbol	Min	Max	Unit
CMPCLK Period	T_{cmpclk}	4*DCLK + 10	-	ns
DATA[7:0] setup before CMPCLK high	T_{cmpsu}	10	-	ns
DATA[7:0] hold after CMPCLK high	T_{cmphld}	10	-	ns
Delay from falling edge of CMPREQ to CMPCLK rising edge	T_{reqclk}	0	-	ns

Notes: 1. CMPREQ signal is asynchronous to CLKIN and can change at any time relative to CLKIN.

2. Certain timing parameters are normalized to the DSP clock, DCLK, in nanoseconds. The DSP clock can be defined as follows:

   External CLKIN Mode:
   DCLK == CLKIN/4 before and during boot
   DCLK == CLKIN after boot

   Internal Clock Mode:
   DCLK == 10MHz before and during boot, i.e. DCLK == 100ns
   DCLK == 65 MHz after boot, i.e. DCLK == 15.4ns

   It should be noted that DCLK for the internal clock mode is application specific. The application code users guide should be checked to confirm DCLK for the particular application.

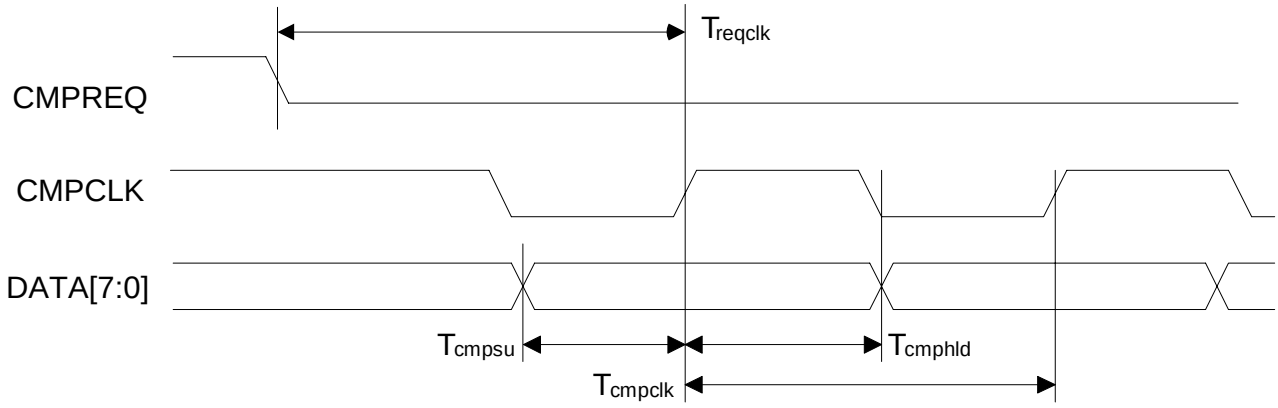

Figure 11. Parallel Data Timing (when not in a parallel control mode)

1.15. Switching Characteristics — Digital Audio Output

(VA, VD[3:1] = 2.5 V ±5%; Inputs: Logic 0 = DGND, Logic 1 = VD, C_L = 20 pF)

Parameter		Symbol	Min	Max	Unit
MCLK period	(Note 1)	T_{mclk}	40	-	ns
MCLK duty cycle	(Note 1)		40	60	%
SCLK period for Master or Slave mode	(Note 2)	T_{sclk}	40	-	ns
SCLK duty cycle for Master or Slave mode	(Note 2)		45	55	%
Master Mode	(Note 2, 3)				
SCLK delay from MCLK rising edge, MCLK as an input		T_{sdmi}		15	ns
SCLK delay from MCLK rising edge, MCLK as an output		T_{sdmo}	–5	10	ns
LRCLK delay from SCLK transition	(Note 4)	T_{lrds}		10	ns
AUDATA2–0 delay from SCLK transition	(Note 4)	T_{adsm}		10	ns
Slave Mode	(Note 5)				
Time from active edge of SCLKN1(2) to LRCLKN1(2) transition		T_{stlr}	10	-	ns
Time from LRCLKN1(2) transition to SCLKN1(2) active edge		T_{lrts}	10	-	ns
AUDATA2–0 delay from SCLK transition	(Note 4, 6)	T_{adss}		15	ns

Notes:
1. MCLK can be an input or an output. These specifications apply for both cases.
2. Master mode timing specifications are characterized, not production tested.
3. Master mode is defined as the CS493XX driving both SCLK and LRCLK. When MCLK is an input, it is divided to produce SCLK and LRCLK.
4. This timing parameter is defined from the non-active edge of SCLK. The active edge of SCLK is the point at which the data is valid.
5. Slave mode is defined as SCLK and LRCLK being driven by an external source.
6. This specification is characterized, not production tested.

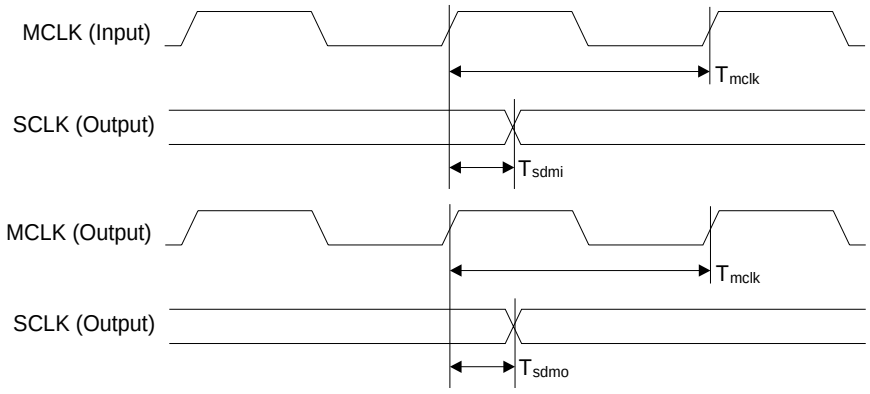

MASTER MODE

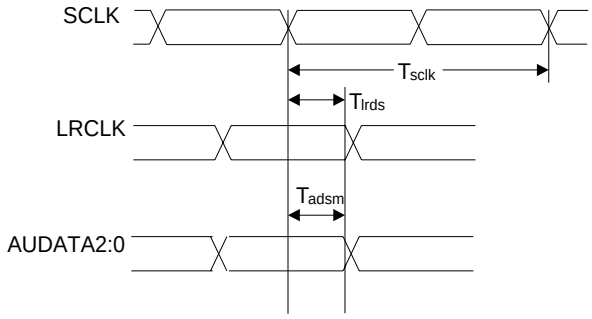

SLAVE MODE

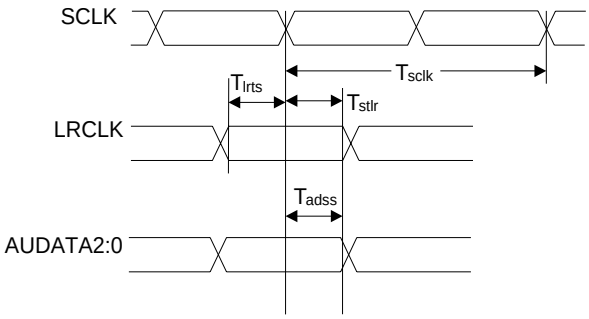

Figure 12. Digital Audio Output Data, Input and Output Clock Timing

2. FAMILY OVERVIEW

The CS49300 family contains system on a chip solutions for multichannel audio decompression and digital signal processing. The CS49300 family is split into 4 sub-families targeted at the DVD, broadcast and audio/video receiver (AVR), and effects and post processing markets.

This document focuses on the electrical features and characteristics of these parts. Different features are described from a hardware design perspective. It should be understood that not all of the features portrayed in this document are supported by all of the versions of application code available. The application code user's guides should be consulted to confirm which hardware features are supported by the software.

The parts use a combination of internal ROM and RAM. Depending on the application being used, a download of application software may be required each time the part is powered up. This document uses "download" and "code load" interchangeably. These terms should be interpreted as meaning the transfer of application code into the internal memory of the part from either an external microcontroller or through the autoboot procedure.

2.1. CS493XX Document Strategy

The documents described below are integral in defining the functionality and usage of the CS39300 family of DSPs.

1) CS49300 Datasheet (*DS339)*

2) CS49300 Errata - (*ER339)* - This document contain updates/corrections/exceptions to the datasheet.

3) Application Note (*AN162)* - This document contains firmware usage information for Broadcast Systems. It serves mainly to assist the microcontroller programmer but may also be highly useful to the system designer.

4) Application Note (*AN163*) - This document contains firmware usage information for Outboard Decoder Systems - e.g. AVR. It serves mainly to assist the microcontroller programmer but may also be highly useful to the system designer.

Note: Please also contact your local Cirrus Logic FAE to obtain other relevant documents of new technology and also latest versions of the above mentioned documents.

2.2. Multichannel Decoder Family of Parts

CS49300 - DVD Audio Decoder. The CS49300 device is targeted at audio decoding in the DVD via ES or PES in a serial or parallel bursty fashion for MLP or for DVD Audio Pack Layer Support. (All the other decoding/processing algorithms listed below require delivery of PCM or IEC61937-packed compressed data via I^2S or LJ formatted digital audio to the CS49300). Specifically the CS49300 will support all of the following decoding/processing standards:

- Meridian Lossless Packing™ (MLP™)* (for ES and PES data delivery only)
- DVD Audio Pack Layer Support* (for ES and PES data delivery only)
- Dolby Digital™ (AC-3™) with Dolby Pro Logic™
- Dolby Digital™ with Dolby Pro Logic™ plus Cirrus Extra Surround™
- Dolby Digital™ with Dolby Pro Logic II™
- Dolby Digital™ with Dolby Pro Logic II™ plus Cirrus Extra Surround™
- Virtual Dolby Digital™
- MPEG-2, Advanced Audio Coding Algorithm (AAC)
- MPEG Multichannel
- MPEG Multichannel with Dolby Pro Logic II™
- MPEG Multichannel plus Cirrus Extra Surround™
- MPEG-1, Layer 3 (MP3)
- DTS Digital Surround™
- DTS Digital Surround™ with Dolby Pro Logic II™
- DTS Digital Surround™ plus Cirrus Extra Surround™
- DTS-ES Extended Surround™ (DTS-ES Discrete 6.1 & Matrix 6.1)
- DTS Neo:6™
- LOGIC5® (5.1 Channel, Max Fs=48kHz and LOGIC7® (7.1 Channel, Max Fs=96kHz)
- VMAx VirtualTheater® (Virtual Dolby Digital)
- SRS TruSurround™ (Virtual Dolby Digital and

DTS Virtual 5.1™ Versions)
- SRS Circle Surround™ I/II
- HDCD®
- Cirrus P.D.F. (Dolby Pro Logic 2Fs Decoder and PCM Upsampler)
- Cirrus PL2_2FS (Dolby Pro Logic II 2Fs Decoder and PCM Upsampler)

Please refer to the CS4932x/CS49330 Part Matrix vs. Code Matrix (PDF) document available from the CS49300 Web Site Page for the latest listing of audio decoding/processing algorithms. The part will also support PES layer decode for audio/video synchronization and DVD Audio Pack layer support. The CS49300 will support all of the above decoding and PCM processing standards.

CS4931X - Broadcast Sub-family. The CS4931X sub-family is targeted at audio decoding in the broadcast markets in systems such as digital TV, HDTV, set-top boxes and digital audio broadcast units (digital radios). Specifically the CS4931X sub-family will support the following decode standards:

- Dolby Digital™ (AC-3™) with Dolby Pro Logic™
- MPEG-2, Advanced Audio Coding Algorithm (AAC)
- MPEG-1, Layers 1, 2 Stereo
- MPEG-1, Layers 3 (MP3) Stereo
- MPEG-2, Layer 2 Stereo
- MPEG-2, Layer 3 (MP3) Stereo

The part will also support PES layer decode for audio/video synchronization. The CS49310 will support all of the above decode standards while other parts in the CS4931X sub-family will decode subsets of the above audio decoding standards.

CS4932X - Audio/Video Receiver (AVR) Sub-family. The CS4932X sub-family is targeted at audio decoding in the audio/video receiver markets. Typical applications will include amplifiers with integrated decoding capability, outboard decoder pre-amplifiers, car radios and any system where the compressed audio is received in an IEC61937 format. Specifically the CS4932X sub-family will support the following decode standards:

- Dolby Digital™ (AC-3™) with Dolby Pro Logic™
- Dolby Digital™ with Dolby Pro Logic™ plus Cirrus Extra Surround™
- Dolby Digital™ with Dolby Pro Logic II™
- Dolby Digital™ with Dolby Pro Logic II™ plus Cirrus Extra Surround™
- Virtual Dolby Digital™
- MPEG-2, Advanced Audio Coding Algorithm (AAC)
- MPEG Multichannel
- MPEG Multichannel with Dolby Pro Logic II™
- MPEG Multichannel plus Cirrus Extra Surround™
- MPEG-1, Layer 3 (MP3)
- DTS Digital Surround™
- DTS Digital Surround™ with Dolby Pro Logic II™
- DTS Digital Surround™ plus Cirrus Extra Surround™
- DTS-ES Extended Surround™ (DTS-ES Discrete 6.1 & Matrix 6.1)
- DTS Neo:6™
- LOGIC5® (5.1 Channel, Max Fs=48kHz and LOGIC7® (7.1 Channel, Max Fs=96kHz)
- VMAx VirtualTheater® (Virtual Dolby Digital)
- SRS TruSurround™ (Virtual Dolby Digital and DTS Virtual 5.1™ Versions)
- SRS Circle Surround™ I/II
- HDCD®
- Cirrus P.D.F. (Dolby Pro Logic 2Fs Decoder and PCM Upsampler)
- Cirrus PL2_2FS (Dolby Pro Logic II 2Fs Decoder and PCM Upsampler)

The CS49326 will support all of the above decode standards while other parts in the CS4932X sub-family will decode subsets of the above audio decoding standards.

Except for the CS49329 which offers AAC support this subfamily will offer integrated ROM support for the AC-3 code, DTS code, Cirrus Original Surround code and DTS tables. The CS49329 will require an external download for all applications but will still support the DTS tables on chip.

CS49330 - General Purpose, Car Audio Processor, PCM Effects & Multichannel Post-Processing Device. The CS49330 sub-family is

targeted at any system that may require post processing or multichannel effects processing, a general purpose MPEG Stereo, MPEG Multichannel, MP3, decoder or PCM effects processor or mixer, or for car audio applications. Typical applications will include multichannel amplifiers, outboard pre-amplifiers, HDTVs and car radios. Specifically the CS49330 sub-family will support the following:

- Cirrus Digital Post-Processor, Home THX Cinema® and THX Surround EX™ 5.1 and 7.1 Channel Post-Processors
- Any general purpose application which only requires MPEG Multichannel; MPEG-1, Layer 3; MPEG-2, Layer 3*, or C.O.S. PCM Effects Processor. (MPEG-1, Layer 3 and MPEG-2, Layer 3 are only available for applications where serial or parallel bursty elementary stream data is available. MPEG-1, Layer 3 audio decoding is only available for IEC61937-packed MP3 data.)
- Multichannel Effects Processing
- General purpose broadcast application that only requires MPEG-1 Stereo (Layers 1, 2, or 3) and MPEG-2 Stereo (Layers 2 or 3)
- Car Audio Post-Processor

This sub-family will continue to grow as more post processing algorithms are supported.

This data sheet covers the CS49300, CS4931X, CS4932X and CS49330 sub-families and devices. These parts are identical from an external electrical perspective. Internally, each part has been tailored for supporting different decoding standards. For this document individual part numbers have been replaced by CS493XX if the description applies to the entire CS49300 Family DSP. If a description only applies to a particular sub-family, CS49300, CS4931X, CS4932X or CS49330 will be used. When CS49300, CS4931X, CS4932X or CS49330 is used, this should be interpreted as applying to all parts within the particular sub-family or a particular device.

3. TYPICAL CONNECTION DIAGRAMS

Six typical connection diagrams have been presented to illustrate using the part with the different communication modes available. They are as follows:

Figure 13, "I²C® Control" on page 29
Figure 14, "I²C® Control with External Memory" on page 30
Figure 15, "SPI Control" on page 31
Figure 16, "SPI Control with External Memory" on page 32
Figure 17, "Intel® Parallel Control Mode" on page 33
Figure 18, "Motorola® Parallel Control Mode" on page 34

The following should be noted when viewing the typical connection diagrams:

The pins are grouped functionally in each of the typical connection diagrams. Please be aware that the CS493XX symbol may appear differently in each diagram.

The external memory interface is only supported when a serial communication mode has been chosen.

The typical connection diagrams demonstrate the PLL being used (CLKSEL is pulled low). To use CLKIN as the DSP clock, CLKSEL should be pulled high. The system designer must be aware that certain software features may not be available if external CLKIN is used as the DSP must run slower when external CLKIN is used. The system designer should also be aware of additional duty cycle requirements when using external CLKIN as a DSP clock. It is highly suggested that the system designer use the PLL and pull CLKSEL low.

3.1. Multiplexed Pins

The CS493XX family of digital signal processors (DSPs) incorporate a large amount of flexibility into a 44 pin package. Because of the high degree of integration, many of these pins are internally multiplexed to serve multiple purposes. Some pins are designed to operate in one mode at power up, and serve a different purpose when the DSP is running. Other pins have functionality which can be controlled by the application running on the DSP.

In order to better explain the behavior of the part, the pins which are multiplexed have been given multiple names. Each name is specific to the pin's operation in a particular mode.

An example of this would be the use of pin 20 in one of the serial control modes. During the boot period of the CS493XX, pin 20 is called ABOOT. ABOOT is sampled on the rising edge of RESET. If ABOOT is high the host must download code to the DSP. If ABOOT is low when sampled, the CS493XX goes into autoboot mode and loads itself with code by generating addresses and reading data on EMAD[7:0]. When the part has been loaded with code and is running an application, however, pin 20 is called INTREQ. INTREQ is an open drain output used to inform the host that the DSP has an outgoing message which should be read.

In this document, pins will be referred to by their functionality. Section 12, "Pin Descriptions" on page 82 describes each pin of the CS493XX and lists all of its names. Please refer to this section when exact pin numbers are in question.

The part has 12 general purpose input and output (GPIO[11:0]) pins that all have multiple functionality. While in one of the parallel communication modes (Section 6.2, "Parallel Host Communication" on page 44), these pins are used to implement the parallel host communication interface. While in one of the serial host modes these pins are used to implement an external memory interface. Alternatively while in one of the serial host modes these pins could be used for another general purpose if the application code has been programmed to support the special purpose. In this document the pins are referenced by the name corresponding to their particular use. Sometimes GPIO[11:0], or some subset thereof, is used when referring to the pins in a general sense.

3.2. Termination Requirements

The CS493XX incorporates open drain pins which must be pulled high for proper operation. INTREQ (pin 20) is always an open drain pin which requires a pull-up for proper operation. When in the I²C serial communication mode, the SCDIO signal (pin 19) is open drain and thus requires a pull-up for proper operation.

Due to the internal, multiplexed design of the pins, certain signals may or may not require termination depending on the mode being used. If a parallel host communication mode is not being used, GPIO[11:0] must be terminated or driven as these pins will come up as high impedance inputs and will be prone to oscillation if they are left floating. The specific termination requirements may vary since the state of some of the GPIO pins will determine the communication mode at the rising edge of reset (please see Section 6, “Control” on page 36 for more information). For the explicit termination requirements of each communication mode please see the typical connection diagrams.

Generally a 4.7k Ohm resistor is recommended for open drain pins. The communication mode setting pins (please see Section 6, “Control” on page 36 for more information) should also be terminated with a 4.7k resistor. A 10k Ohm resistor is sufficient for the GPIO pins and unused inputs.

3.3. Phase Locked Loop Filter

The internal phase locked loop (PLL) of the CS493XX requires an external filter for successful operation. The topology of this filter is shown in the typical connection diagrams. The component values are shown below. Care should be taken when laying out the filter circuitry to minimize trace lengths and to avoid any close routing of high frequency signals. Any noise coupled on to the filter circuit will be directly coupled into the PLL, which could affect performance.

Reference Designator	Value
C1	2.2uF
C2	220pF
C3	10nF
R1	200k Ohm

Table 1. PLL Filter Component Values

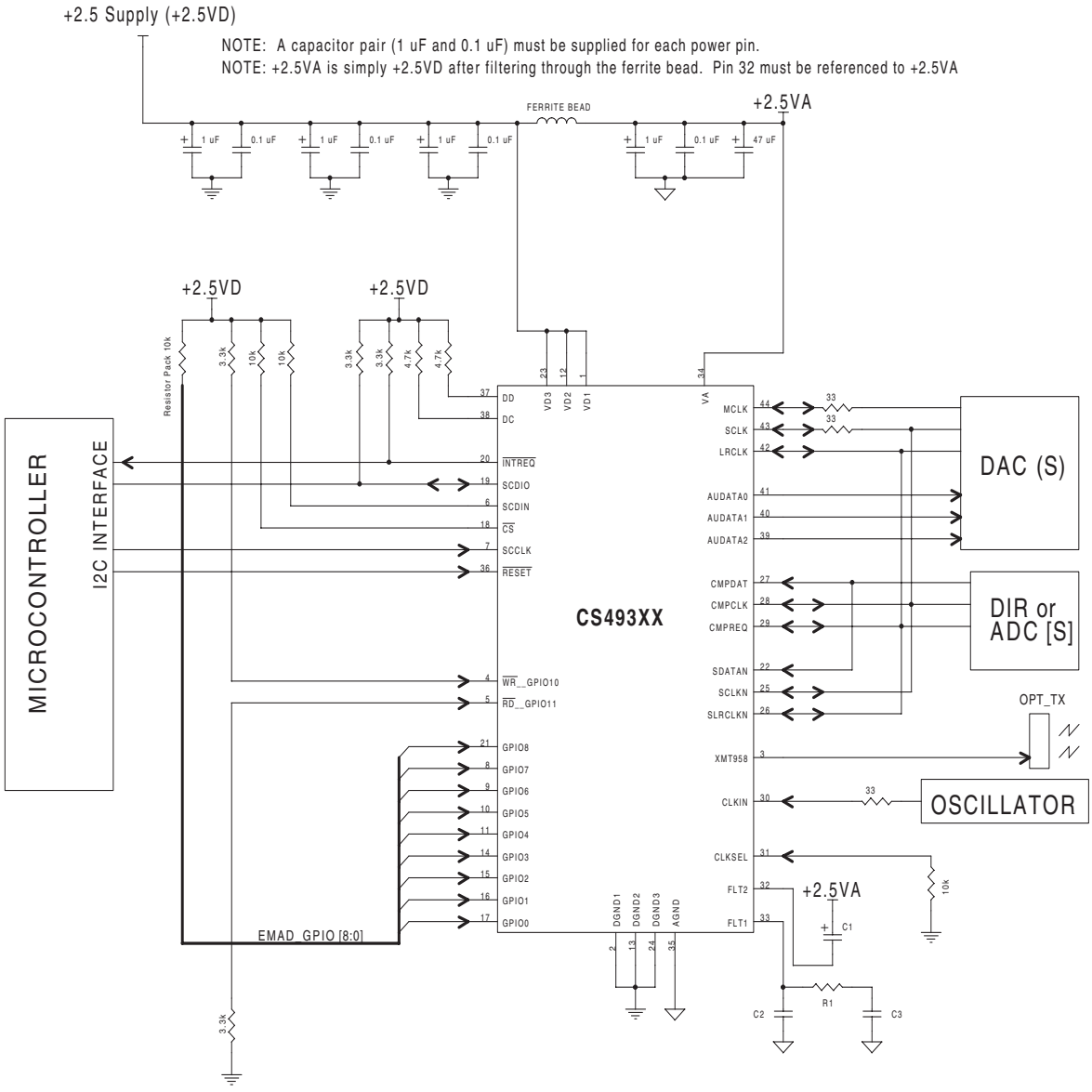

Figure 13. I²C® Control

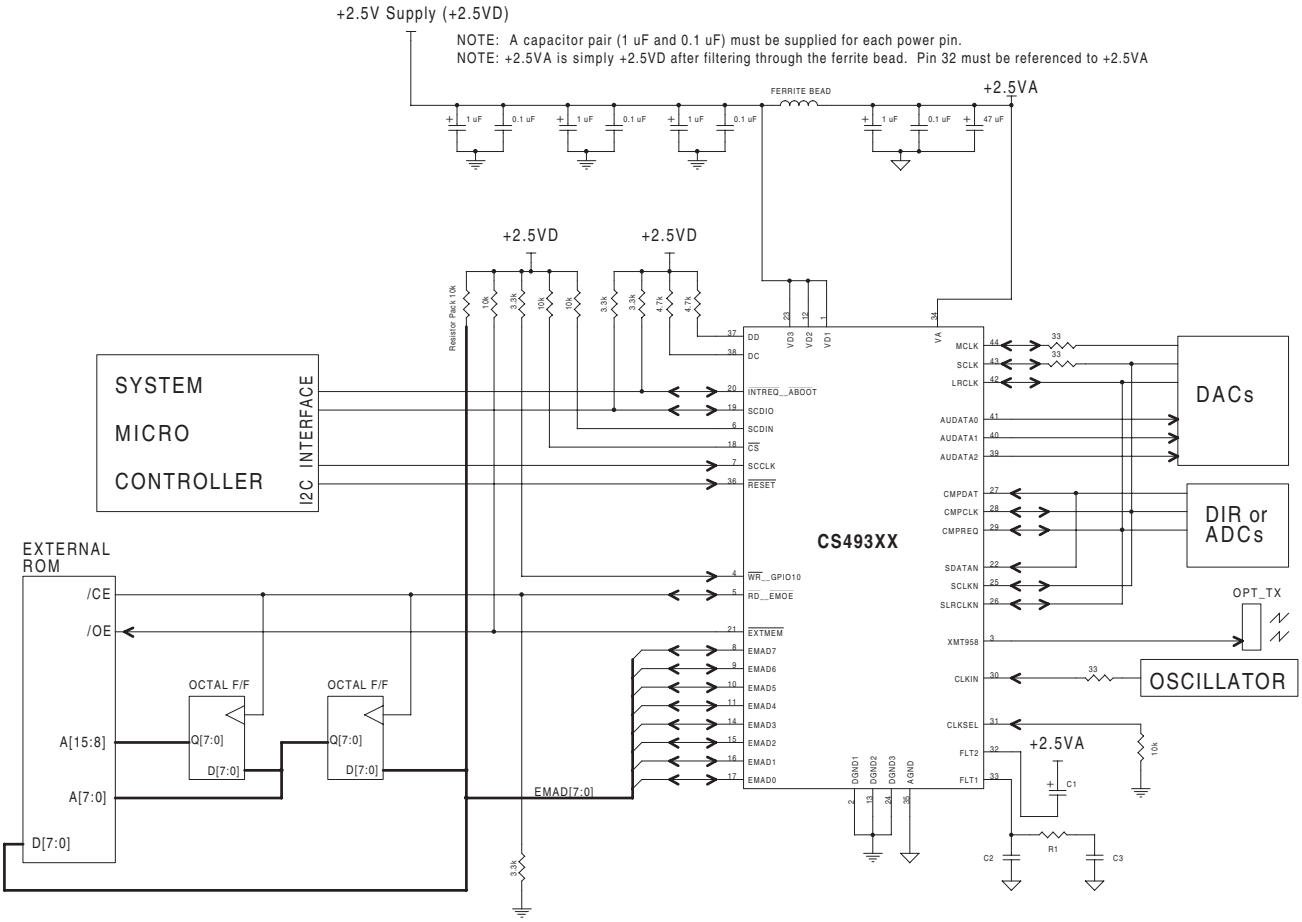

Figure 14. I²C® Control with External Memory

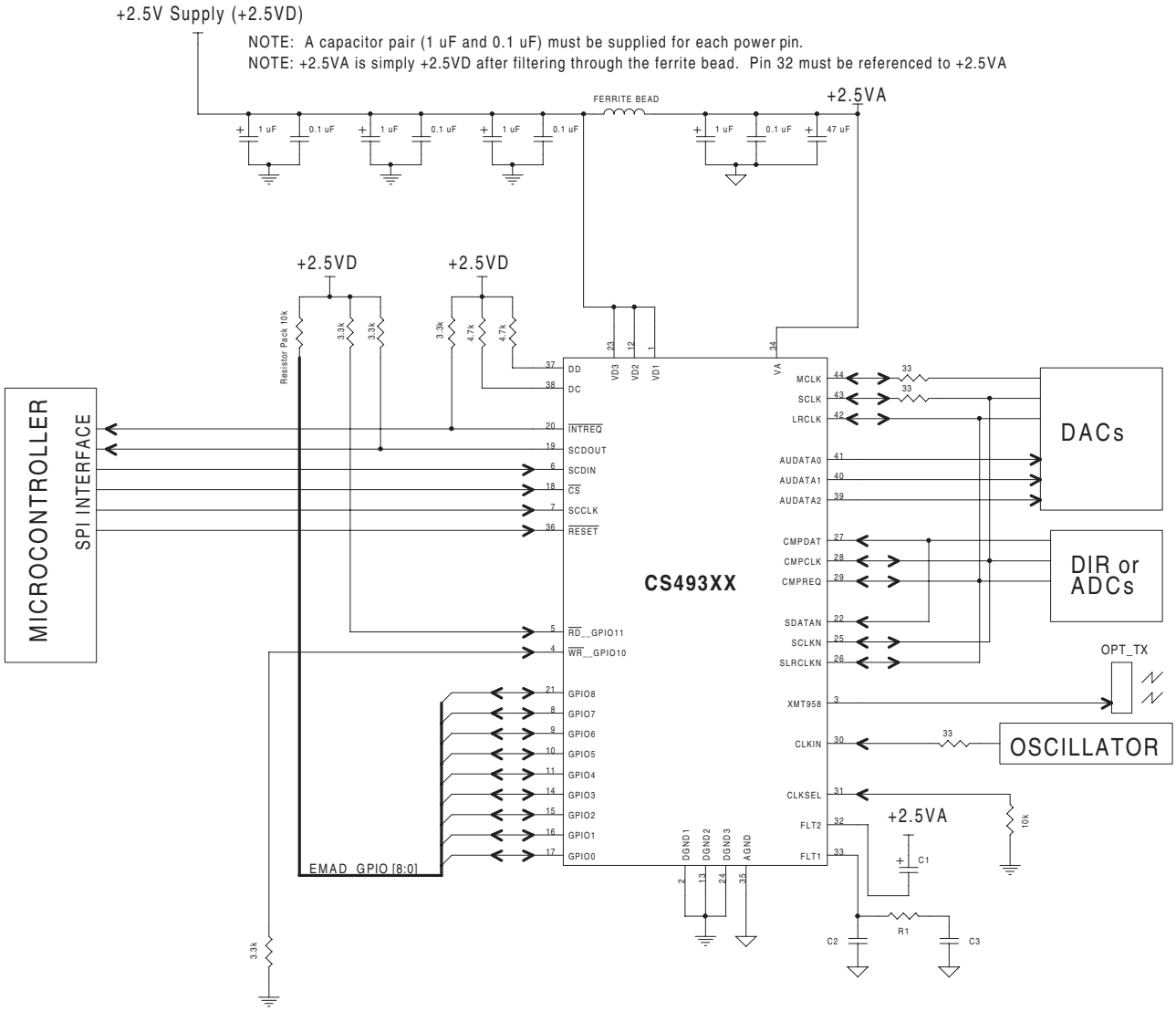

Figure 15. SPI Control

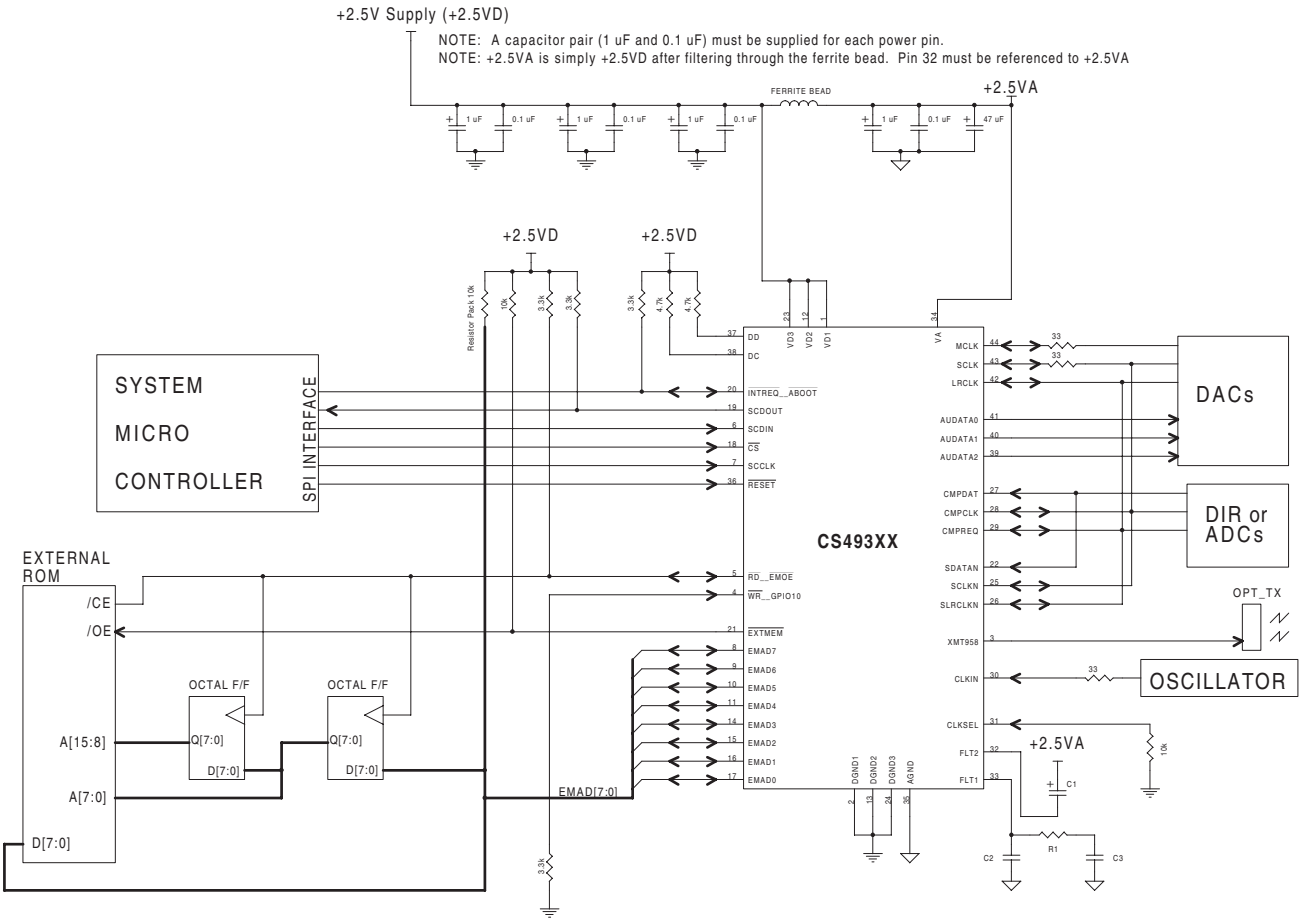

Figure 16. SPI Control with External Memory

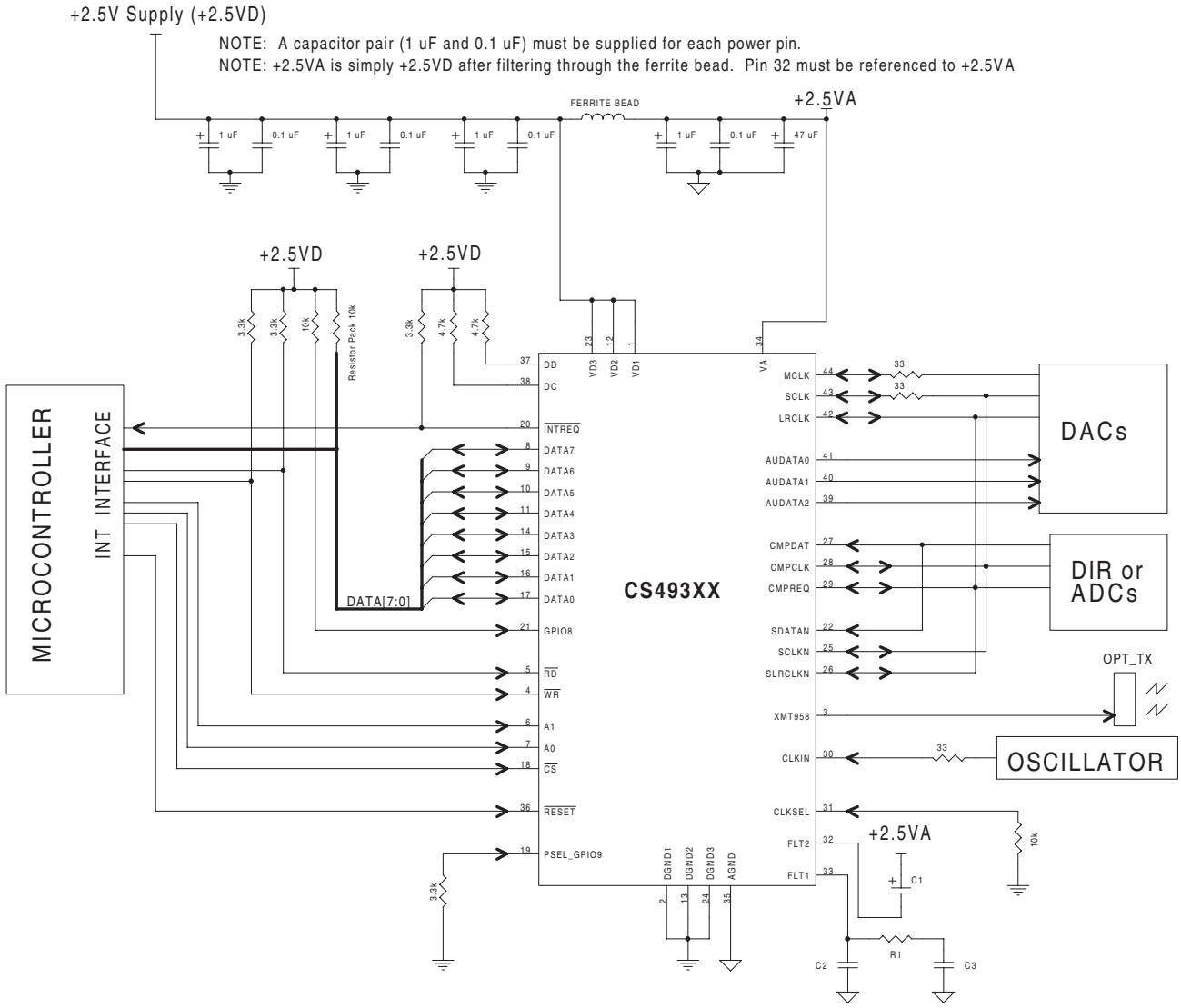

Figure 17. Intel® Parallel Control Mode

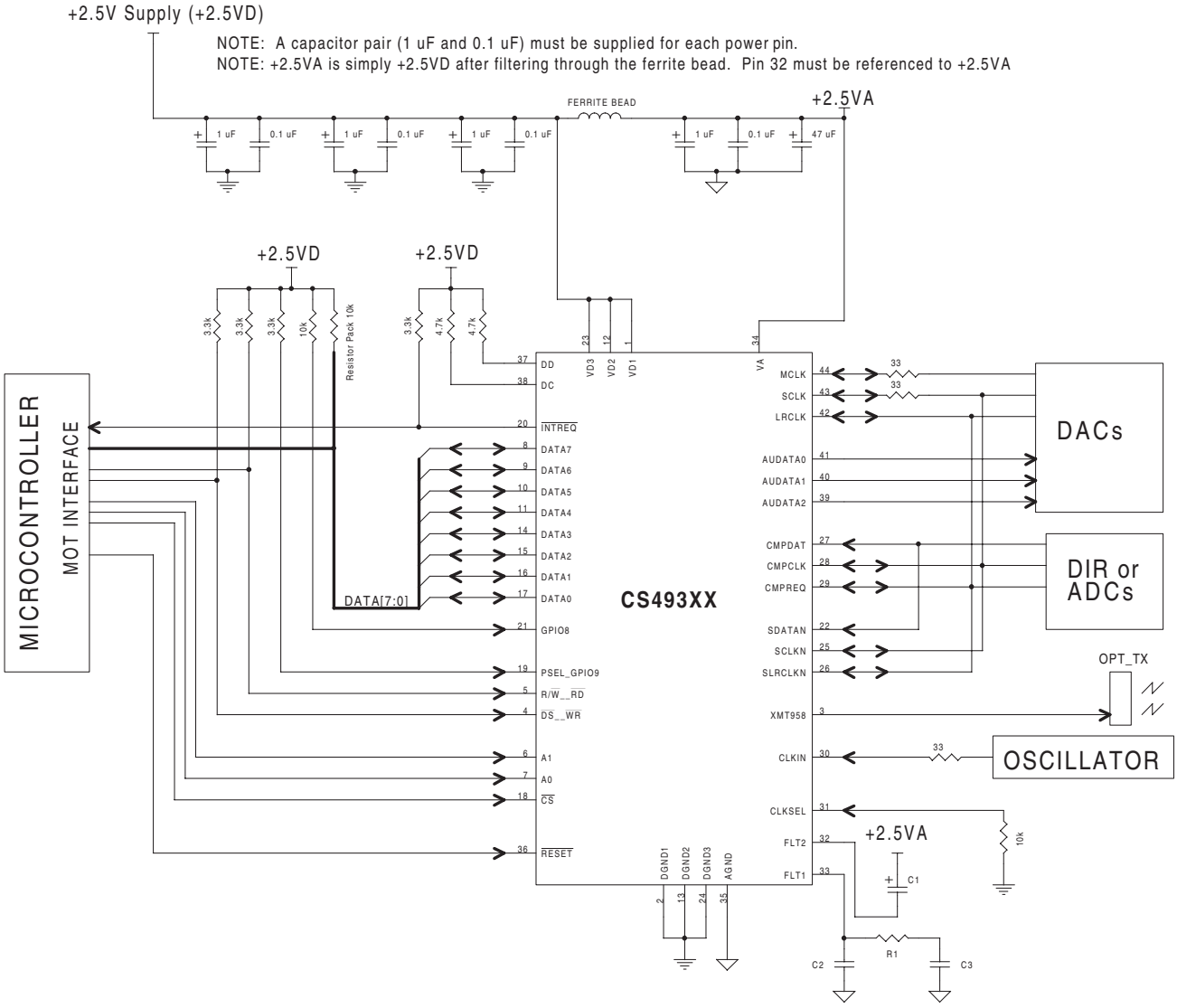

Figure 18. Motorola® Parallel Control Mode

4. POWER

The CS493XX requires a 2.5V digital power supply for the digital logic within the DSP and a 2.5V analog power supply for the internal PLL. There are three digital power pins, VD1, VD2 and VD3, along with three digital grounds, DGND1, DGND2 and DGND3. There is one analog power pin, VA and one analog ground, AGND. The DSP will perform at its best when noise has been eliminated from the power supply. The recommendations given below for decoupling and power conditioning of the CS493XX will help to ensure reliable performance.

4.1. Decoupling

It is good practice to decouple noise from the power supply by placing capacitors directly between the power and ground of the CS493XX. Each pair of power pins (VD1/DGND, VD2/DGND, VD3/DGND, VA/AGND) should have its own decoupling capacitors. The recommended procedure is to place both a 0.1uF and a 1uF capacitor as close as physically possible to each power pin. The 0.1uF capacitor should be closest to the part (typically 5mm or closer).

4.2. Analog Power Conditioning

In order to obtain the best performance from the CS493XX's internal PLL, the analog power supply (VA) must be as clean as possible. A ferrite bead should be used to filter the 2.5V power supply for the analog portion of the CS493XX. This power scheme is shown in the typical connection diagrams.

4.3. Ground

For two layer applications, care should be taken to have sufficient ground between the DSP and parts in which it will be interfacing (DACs, ADCs, DIR, microcontrollers, external memory etc). If there is not sufficient ground, a potential will be seen between the ground reference of the DSP and the interface parts and the noise margin will be significantly reduced potentially causing communication or data integrity problems.

4.4. Pads

The CS493XX incorporate 3.3V tolerant pads. This means that while the CS493XX power supplies require 2.5 volts, 3.3 volt signals can be applied to the inputs without damaging the part.

5. CLOCKING

The CS493XX clock manager incorporates a programmable phase locked loop (PLL) clock synthesizer. The PLL takes an input reference clock and produces all the internal clocks required to run the internal DSP and to provide master mode timing to the audio input/output peripherals. The clock manager also includes a 33-bit system time clock (STC) to support audio and video synchronization.

The PLL can be internally bypassed by connecting the CLKSEL pin to VD. This connection multiplexes the CLKIN pin directly to the DSP clock. Care should be taken to note the minimum CLKIN requirements when bypassing the PLL.

The PLL reference clock has three possible sources that are routed through a multiplexer controlled by the DSP: SCLKN2, SCLKN1, and CLKIN. Typically, in audio/video environments like set-top boxes, the CLKIN pin is connected to 27 MHz. In other scenarios such as an A/V receiver design, the PLL can be clocked through the CLKIN pin with even multiples of the desired sampling rate or with an already available clock source. Typically a 12.288 MHz CLKIN is used in this scenario so that the same oscillator can be used for the DSP and ADC.

The clock manager is controlled by the DSP application software. The software user's guide for the application code being used should be referenced for what CLKIN input frequency is supported.

6. CONTROL

Control of the CS493XX can be accomplished through one of four methods. The CS493XX supports I²C® and SPI serial communication. In addition the CS493XX supports both a Motorola and Intel byte wide parallel host control mode. Only one of the four communication modes can be selected for control. The states of the RD, WR, and PSEL pins are sampled at the rising edge of RESET to determine the interface type as shown in Table 2.

RD (Pin 5)	WR (Pin 4)	PSEL (Pin 19)	Host Interface Mode
1	1	1	8-bit Motorola®
1	1	0	8-bit Intel®
0	1	X	Serial I²C®
1	0	X	Serial SPI

Table 2. Host Modes

Whichever host communication mode is used, host control of the CS493XX is handled through the application software running on the DSP. Configuration and control of the CS493XX decoder and its peripherals are indirectly executed through a messaging protocol supported by the downloaded application code. In other words successful communication can only be accomplished by following the low level hardware communication format and high level messaging protocol. The specifications of the messaging protocol can be found in any of the software user's guides.

Only the subsection describing the communication mode being used needs to be read by the system designer.

6.1. Serial Communication

The CS493XX has a serial control port that supports both SPI and I²C® forms of communication.

The following sections will explain each communication mode in more detail. Flow diagrams will illustrate read and write cycles.

Timing diagrams will be shown to demonstrate relative edge positions of signal transitions for read and write operations.

6.1.1. SPI Communication

SPI communication with the CS493XX is accomplished with 5 communication lines: chip select, serial control clock, serial data in, serial data out and an interrupt request line to signal that the DSP has data to transmit to the host. Table 3 shows the mnemonic, pin name, and pin number of each of these signals on the CS493XX.

Mnemonic	Pin Name	Pin Number
Chip Select	CS	18
Serial Clock	SCCLK	7
Serial Data In	SCDIN	6
Serial Data Out	SCDOUT	19
Interrupt Request	INTREQ	20

Table 3. SPI Communication Signals

6.1.1.1. Writing in SPI

When writing to the device in SPI the same protocol will be used whether writing a byte, a message or even an entire executable download image. The examples shown in this document can be expanded to fit any write situation. Figure 19, "SPI Write Flow Diagram" on page 37 shows a typical write sequence:

The following is a detailed description of an SPI write sequence with the CS493XX.

1) An SPI transfer is initiated when chip select (CS) is driven low.
2) This is followed by a 7-bit address and the read/write bit set low for a write. The address for the CS493XX defaults to 0000000b. It is necessary to clock this address in prior to any transfer in order for the CS493XX to accept the write. In other words a byte of 0x00 should be clocked into the device preceding any write. The 0x00 byte represents the 7 bit address 0000000b, and the least significant bit set to 0 to designate a write.
3) The host should then clock data into the device most significant bit first, one byte at a time. The data byte is transferred to the DSP on the falling edge of the eighth serial clock. For this reason, the serial clock should be default low so that eight transitions from low to high to low will occur for each byte.

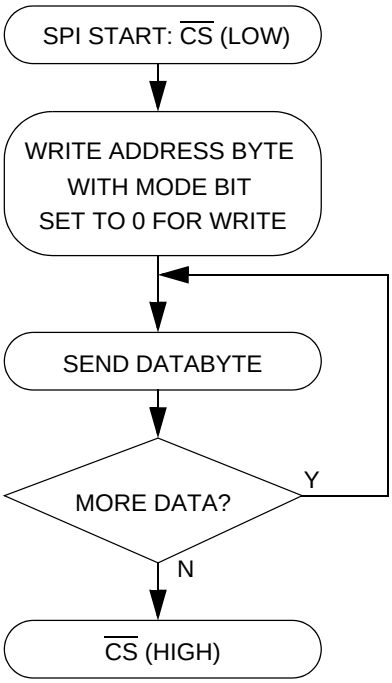

Figure 19. SPI Write Flow Diagram

4) When all of the bytes have been transferred, chip select should be raised to signify an end of write. Once again it is crucial that the serial clock transitions from high to low on the last bit of the last byte before chip select is raised, or a loss of data will occur.

The same write routine could be used to send a single byte, message or an entire application code image. From a hardware perspective, it makes no difference whether communication is by byte or multiple bytes of any length as long as the correct hardware protocol is followed.

6.1.1.2. Reading in SPI

A read operation is necessary when the CS493XX signals that it has data to be read. The CS493XX does this by dropping its interrupt request line (INTREQ) low. When reading from the device in SPI, the same protocol will be used whether reading a single byte or multiple bytes. The examples shown in this document can be expanded to fit any read situation. Figure 20, "SPI Read Flow Diagram" on page 37 shows a typical read sequence:

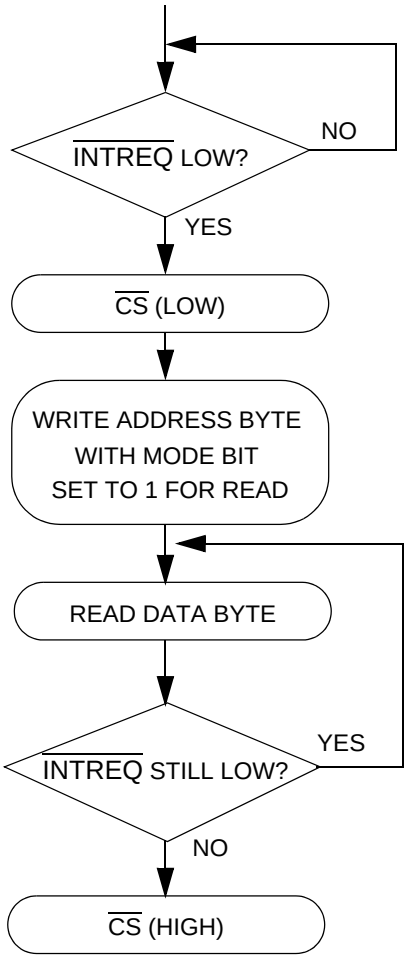

Figure 20. SPI Read Flow Diagram

The following is a detailed description of an SPI read sequence with the CS493XX.

1) An SPI read transaction is initiated by the CS493XX dropping INTREQ, signaling that it has data to be read.
2) The host responds by driving chip select (CS) low.
3) This is followed by a 7-bit address and the read/write bit set high for a read. The address for the CS493XX defaults to 0000000b. It is necessary to clock this address in prior to any transfer in order for the CS493XX to acknowledge the read. In other words a byte of 0x01 should be clocked into the device preceding any read. The 0x01 byte represents the 7 bit address 0000000b, and the least

significant bit set to 1 to designate a read.

4) After the falling edge of the serial control clock (SCCLK) for the read/write bit, the data is ready to be clocked out on the control data out pin (CDOUT). Data clocked out by the host is valid on the rising edge of SCCLK and data transitions occur on the falling edge of SCCLK. The serial clock should be default low so that eight transitions from low to high to low will occur for each byte.
5) If INTREQ is still low, another byte should be clocked out of the CS493XX. Please see the discussion below for a complete description of INTREQ behavior.
6) When INTREQ has risen, the chip select line of the CS493XX should be raised to end the read transaction.

Understanding the role of INTREQ is important for successful communication. INTREQ is guaranteed to remain low (once it has gone low) until the second to last rising edge of SCCLK of the last byte to be transferred out of the CS493XX. If there is no more data to be transferred, INTREQ will go high at this point. For SPI this is the rising edge for the second to last bit of the last byte to be transferred. After going high, INTREQ is guaranteed to stay high until the next rising edge of SCCLK. This end of transfer condition signals the host to end the read transaction by clocking the last data bit out and raising CS. If INTREQ is still low after the second to last rising edge of SCCLK, the host should continue reading data from the serial control port.

It should be noted that all data should be read out of the serial control port during one cycle or a loss of data will occur. In other words, all data should be read out of the chip until INTREQ signals the last byte by going high as described above. Please see Section 6.1.3, “INTREQ Behavior: A Special Case” on page 41 for a more detailed description of INTREQ behavior.

Figure 21, "SPI Timing" on page 39 timing diagram shows the relative edges of the control lines for an SPI read and write.

6.1.2. I²C Communication

I²C communication with the CS493XX is accomplished with 3 communication lines: serial control clock, a bi-directional serial data input/output line and an interrupt request line to signal that the DSP has data to transmit to the host. See Figure 4, "I²C® Communication Signals" on page 38 shows the mnemonic, pin name, and pin number of each of these signals on the CS493XX.

Mnemonic	Pin Name	Pin Number
Serial Clock	SCCLK	7
Bi-Directional Data	SCDIO	19
Interrupt Request	INTREQ	20

Table 4. I²C® Communication Signals

Typically in I²C® communication SCDIO is an open drain line with a pull-up. A logic one is placed on the line by three-stating the output and allowing the pull-up to raise the line. At this point another device can drive the line low if necessary. Three-stating SCDIO can have two effects: 1. To send out a one when writing data or sending a “no acknowledge”; 2. release the line when another chip is writing data.

6.1.2.1. Writing in I²C®

When writing to the device in I²C® the same protocol will be used whether writing a byte, a message or even an application code image. The examples shown in this document can be expanded to fit any write situation. Figure 23 shows a typical write sequence:

The following is a detailed description of an I²C® write sequence with the CS493XX.

1) An I²C® transfer is initiated with an I²C® start condition which is defined as the data (SCDIO) line falling while the clock (SCCLK) is held high.
2) Next a 7-bit address with the read/write bit set low for a write should be sent to the CS493XX. The address for the CS493XX defaults to 0000000b. It is necessary to clock this address in prior to any transfer in order for the CS493XX to accept the write. In other words a byte of 0x00 should be clocked into the device

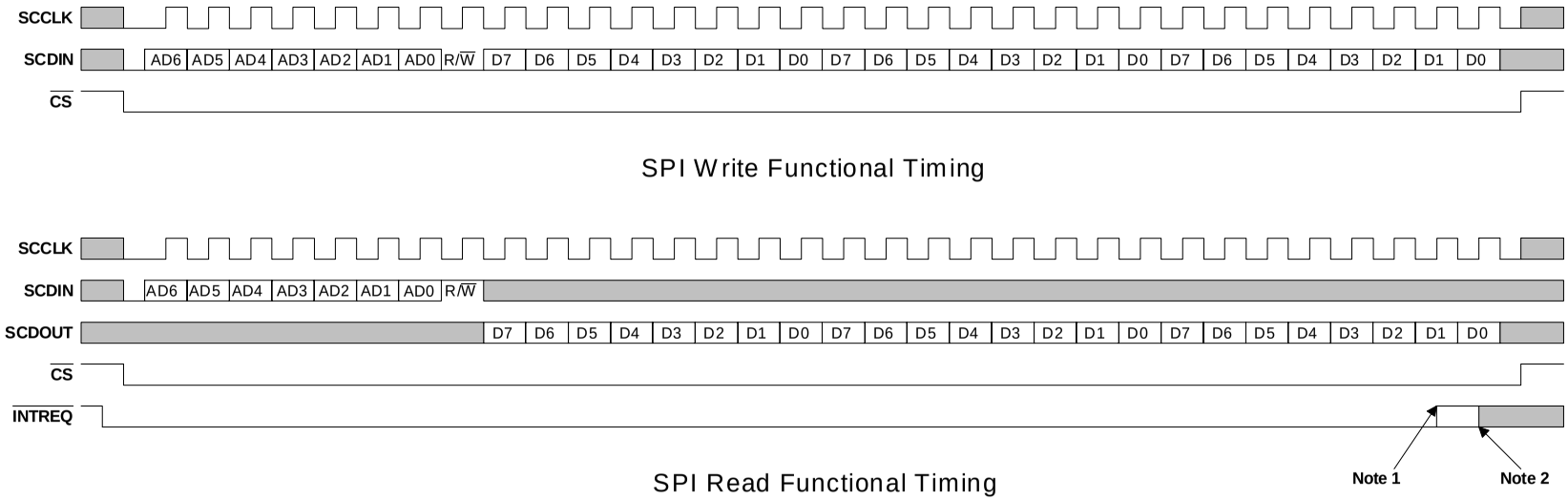

Notes:
1. $\overline{\text{INTREQ}}$ is guaranteed to stay LOW until the rising edge of SCCLK for bit D1 of the last byte to be transferred out of the CS493XX.
2. $\overline{\text{INTREQ}}$ is guaranteed to remain HIGH until the next rising edge of SCCLK at which point it may go LOW again if there is new data to be read. The condition of $\overline{\text{INTREQ}}$ going LOW at this point should be treated as a new read condition. After a stop condition, a new start condition and an address byte should be sent

Figure 21. SPI Timing

preceding any write. The 0x00 byte represents the 7 bit of address (0000000b) and the read/write bit set to 0 to designate a write.

3) After each byte (including the address and each data byte) the host must release the data line and provide a ninth clock for the CS493XX to acknowledge. The CS493XX will drive the data line low during the ninth clock to acknowledge. If for some reason the CS493XX does not acknowledge, it means that the last byte sent was not received and should be resent. If the resent byte fails to produce an acknowledge, a stop condition should be sent and the device should be reset.

4) The host should then clock data into the device most significant bit first, one byte at a time. The CS493XX will (and must) acknowledge each byte that it receives which means that after each byte the host must provide an acknowledge clock pulse on SCCLK and release the data line, SCDIO.

5) At the end of a data transfer a stop condition must be sent. The stop condition is defined as the rising edge of SCDIO while SCCLK is high.

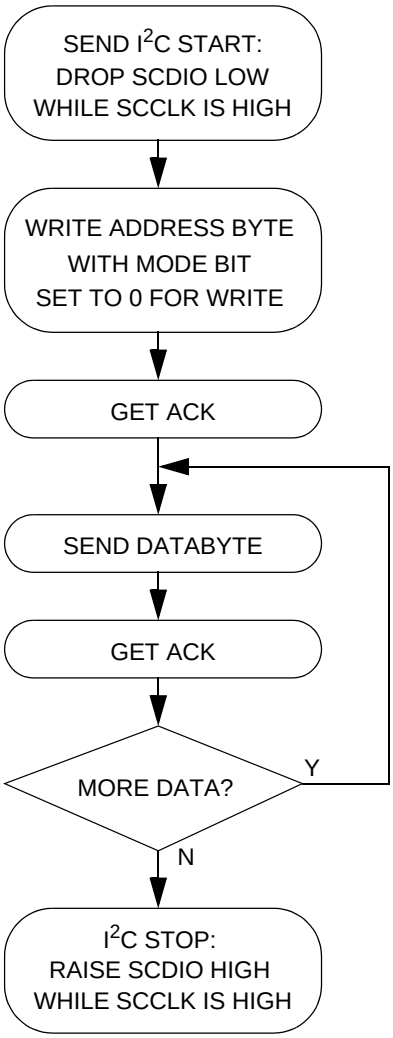

Figure 22. I²C® Write Flow Diagram

6.1.2.2. Reading in I²C®

A read operation is necessary when the CS493XX signals that it has data to be read. It does this by dropping its interrupt request line (INTREQ) low. When reading from the device in I²C®, the same protocol will be used whether reading a single byte or multiple bytes. The examples shown in this document can be expanded to fit any read situation. Figure 23 shows a typical I²C® read sequence

1) An I²C® read transaction is initiated by the CS493XX dropping INTREQ, signaling that it has data to be read.

2) The host responds by sending an I²C® start condition which is SCDIO dropping while SCCLK is held high.

3) The start condition is followed by a 7-bit address and the read/write bit set high for a read. The address for the CS493XX defaults to 0000000b. It is necessary to clock this address in prior to any transfer in order for the CS493XX to acknowledge the read. In other words a byte of 0x01 should be clocked into the device preceding any read. The 0x01 byte represents the 7 bit address 0000000b and a read/write bit set to 1 to designate a read.

4) After the falling edge of the serial control clock (SCCLK) for the read/write bit of the address byte, an acknowledge must be read in by the host. The CS493XX will drive SCDIO low to acknowledge the address byte and to indicate that it is ready for a read operation. If an acknowledge is not sent by the CS493XX, a stop condition should be issued and the read sequence should be restarted.

5) The data is ready to be clocked out on the SCDIO line at this point. Data clocked out by

the host is valid on the rising edge of SCCLK and data transitions occur on the falling edge of SCCLK.

6) If INTREQ is still low after a byte transfer, an acknowledge (SCDIO clocked low by SCCLK) must be sent by the host to the CS493XX and another byte should be clocked out of the CS493XX. Please see the discussion below for a complete description of INTREQ's behavior.

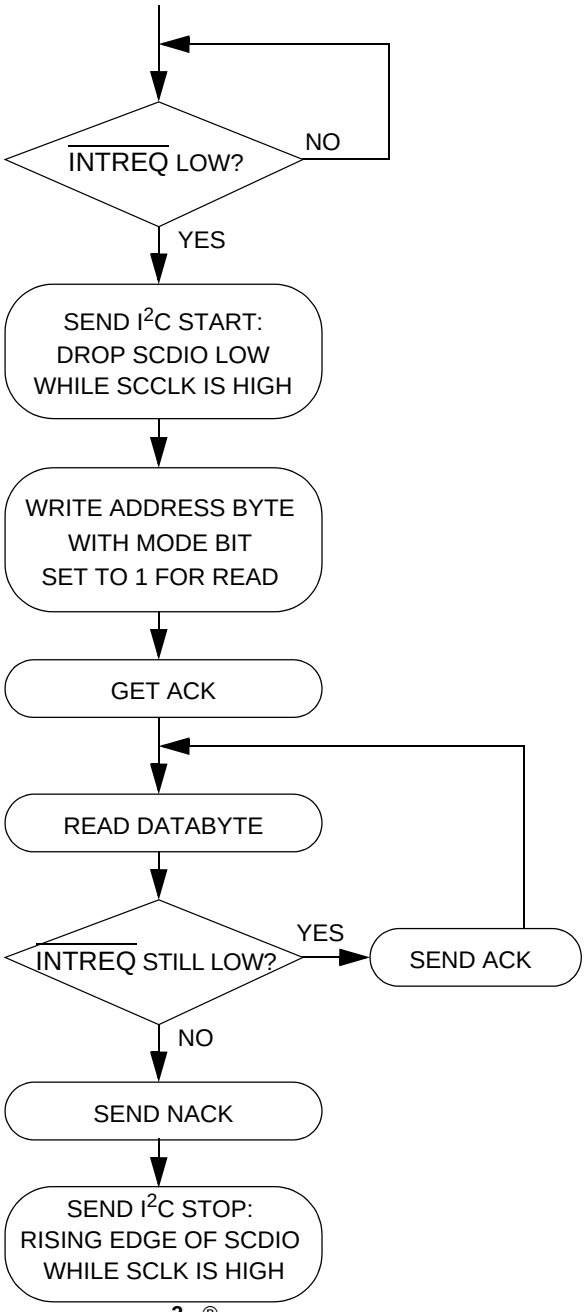

Figure 23. I²C® Read Flow Diagram

7) When INTREQ has risen, a no acknowledge should be sent by the host (SCDIO clocked high by the host) to the CS493XX. This, followed by an I²C® stop condition (SCDIO raised, while SCCLK is high) signals an end of read to the CS493XX.

Understanding the role of INTREQ is important for successful communication. INTREQ is guaranteed to remain low (once it has gone low), until the rising edge of SCCLK for the last bit of the last byte to be transferred out of the CS493XX (i.e. the rising edge of SCCLK before the ACK SCCLK). If there is no more data to be transferred, INTREQ will go high at this point. After going high, INTREQ is guaranteed to stay high until the next rising edge of SCCLK (i.e. it will stay high until the rising edge of SCCLK for the ACK/NACK bit). This end of transfer condition signals the host to end the read transaction by clocking the last data bit out of the CS493XX and then sending a no acknowledge to the CS493XX to signal that the read sequence is over. At this point the host should send an I²C® stop condition to complete the read sequence. If INTREQ is still low after the rising edge of SCCLK on the last data bit of the current byte, the host should send an acknowledge and continue reading data from the serial control port.

It should be noted that all data should be read out of the serial control port during one cycle or a loss of data will occur. In other words, all data should be read out of the chip until INTREQ signals the last byte by going high as described above. Please see Section 6.1.3, "INTREQ Behavior: A Special Case" on page 41 for a more detailed description of INTREQ behavior.

The timing diagram in Figure 24, "I2C® Timing" on page 42 shows the relative edges of the control lines for an I²C® read and write.

6.1.3. INTREQ Behavior: A Special Case

When communicating with the CS493XX there are two types of messages which force INTREQ to go low. These messages are known as solicited messages and unsolicited messages. For more information on the specific types of messages that require a read from the host, one of the application code user's guides should be referenced.

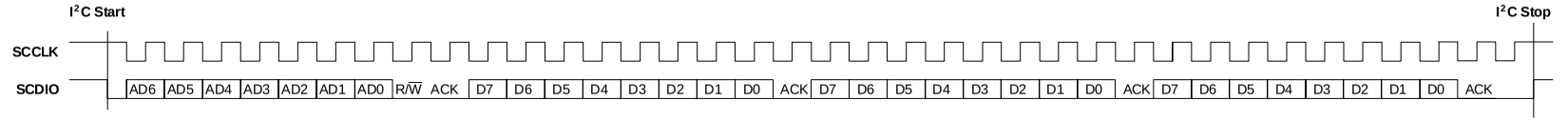

I²C Write Functional Timing

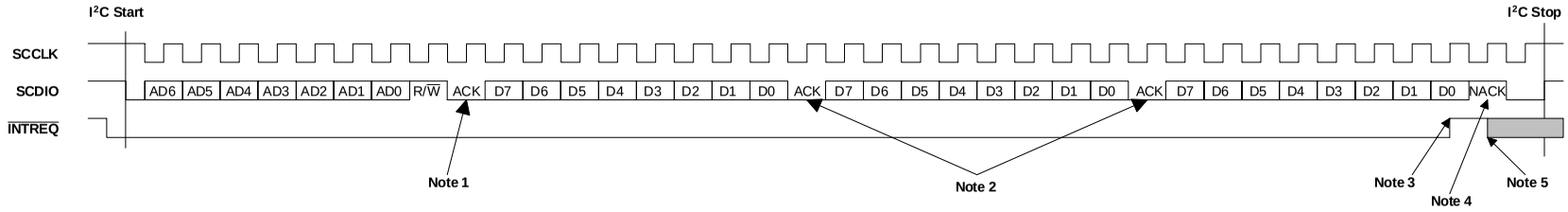

I²C Read Functional Timing

Notes:
1. The ACK for the address byte is driven by the CS493XX.
2. The ACKs for the data bytes being read from the CS493XX should be driven by the host.
3. $\overline{\text{INTREQ}}$ is guaranteed to stay LOW until the rising edge of SCCLK for bit D0 of the last byte to be transferred out of the CS493XX.
4. A NACK should be sent by the host after the last byte to indicate the end of the read cycle.
5. $\overline{\text{INTREQ}}$ is guaranteed to stay HIGH until the next rising edge of SCCLK (for the ACK/NACK bit) at which point it may go LOW again if there is new data to be read. The condition of $\overline{\text{INTREQ}}$ going LOW at this point should be treated as a new read condition. After a stop condition, a new start condition followed by an address byte should be sent.

Figure 24. I²C® Timing

In general, when communicating with the CS493XX, INTREQ will not go low unless the host first sends a read request command message. In other words the host must solicit a response from the DSP. In this environment, the host must read from the CS493XX until INTREQ goes high again. Once the INTREQ pin has gone high it will not be driven low until the host sends another read request.

When unsolicited messages, such as those used for Autodetect, have been enabled, the behavior of INTREQ is noticeably different. The CS493XX will drop the INTREQ pin whenever the DSP has an outgoing message, even though the host may not have requested data.

There are three ways in which INTREQ can be affected by an unsolicited message:

1) During normal operation, while INTREQ is high, the DSP could drop INTREQ to indicate an outgoing message, without a prior read request.

2) The host is in the process of reading from the CS493XX, meaning that INTREQ is already low. An unsolicited message arrives which forces INTREQ to remain low after the solicited message is read.

3) The host is reading from the CS493XX when the unsolicited message is queued, but INTREQ goes high for one period of SCCLK and then goes low again before the end of the read cycle.

In case (1) the host should perform a read operation as discussed in the previous sections.

In case (2) an unsolicited message arrives before the second to last SCCLK of the final byte transfer of a read, forcing the INTREQ pin to remain low. In this scenario the host should continue to read from the CS493XX without a stop/start condition or data will be lost.

In case (3) an unsolicited message arrives between the second to last SCCLK and the last SCCLK of the final byte transfer of a read. In this scenario, INTREQ will transition high for one clock (as if the read transaction has ended), and then back low (indicating that more data has queued). This final case is the most complicated and shall be explained in detail.

There are two constraints which completely characterize the behavior of the INTREQ pin during a read. The first constraint is that the INTREQ pin is guaranteed to remain low until the second to last SCCLK (SCCLK number N-1) of the final byte being transferred from the CS493XX (not necessarily the second to last bit of the data byte). The second constraint is that once the INTREQ pin has gone high it is guaranteed to remain high until the rising edge of the last SCCLK (SCCLK number N) of the final byte being transferred from the CS493XX (not necessarily the last bit of the data byte). If an unsolicited message arrives in the window of time between the rising edge of the second to last SCCLK and the final SCCLK, INTREQ will drop low on the rising edge of the final SCCLK as illustrated in the functional timing diagrams shown for $I^2C^®$ and SPI read cycles.

INTREQ behavior for $I^2C^®$ communication is illustrated in Figure 24, "I2C® Timing" on page 42. When using $I^2C^®$ communication the INTREQ pin will remain low until the rising edge of SCCLK for the data bit D0 (SCCLK N-1), but it can go low at the rising edge of SCCLK for the NACK bit (SCCLK N) if an unsolicited message has arrived. If no unsolicited messages arrive, the INTREQ pin will remain high after rising.

INTREQ behavior for SPI communication is illustrated in Figure 21, "SPI Timing" on page 39. When using SPI communication, the INTREQ pin will remain low until the rising edge of SCCLK for the data bit D1 (SCCLK N-1), but it can go low at the rising edge of SCCLK for data bit D0 (SCCLK N) if an unsolicited message has arrived. If no unsolicited messages arrive, the INTREQ pin will remain high after rising.

Ideally, the host will sample INTREQ on the falling edge of SCCLK number N-1 of the final byte of each read response message. If INTREQ is sampled high, the host should conclude the current read cycle using the stop condition defined for the communication mode chosen. The host should then begin a new read cycle complete with the appropriate start condition and the chip address. If INTREQ is sampled low, the host should continue reading the next message from the CS493XX without ending the current read cycle.

When using automated communication ports, however, the host is often limited to sampling the status of INTREQ after an entire byte has been transferred. In this situation a low-high-low transition (case 3) would be missed and the host will see a constantly low INTREQ pin. Since the host should read from the CS493XX until it detects that INTREQ has gone high, this condition will be treated as a multiple-message read (more than one read response is provided by the CS493XX). Under these conditions a single byte of 0x00 will be read out before the unsolicited message.

The length of every read response is defined in the user's manual for each piece of application code. Thus, the host should know how many bytes to expect based on the first byte (the OPCODE) of a read response message. It is guaranteed that no read responses will begin with 0x00, which means that a NULL byte (0x00) detected in the OPCODE position of a read response message should be discarded. Please see an Application Code User's Guide for an explanation of the OPCODE.

It is important that the host be aware of the presence of NULL bytes, or the communication channel could become corrupted.

When case (3) occurs and the host issues a stop condition before starting a new read cycle, the first byte of the unsolicited message is loaded directly into the shift register and 0x00 is never seen.

Alternatively, if case (3) occurs and the host continues to read from the CS493XX without a stop condition (a multiple message read), the 0x00 byte must be shifted out of the CS493XX before the first byte of the unsolicited message can be read.

In other words, if a system can only sample INTREQ after an entire byte transfer the following routine should be used if INTREQ is low after the last byte of the message being read:

1) Read one byte
2) If the byte = 0x00 discard it and skip to step 3. If the byte != 0x00 then it is the OPCODE for the next message. For this case skip to step 4.
3) Read one more byte. This is the OPCODE for the next message.
4) Read the rest of the message as indicated in the previous sections.

6.2. Parallel Host Communication

The parallel host communication modes of the CS493XX provide an 8-bit interface to the DSP. An Intel-style parallel mode and a Motorola-style parallel mode are supported. The host interface is implemented using four communication registers within the CS493XX as shown in Table 5, "Parallel Input/Output Registers," on page 45.

When the host is downloading code to the CS493XX or configuring the application code, control messages will be written to (and read from) the Host Message register. The Host Control register is used during messaging sessions to determine when the CS493XX can accept another byte of control data, and when the CS493XX has an outgoing byte that may be read.

The PCM Data and Compressed Data registers are used strictly for the transfer of audio data. The host cannot read from these two registers. Audio data written to registers 11b and 10b are transferred directly to the internal FIFOs of the CS493XX. When the level of the PCM FIFO reaches the FIFO threshold level, the MFC bit of the Host Control register will be set. When the level of the Compressed Data FIFO reaches the FIFO threshold level, the MFB bit of the Host Control register will be set.

It is important to remember that the parallel host interface requires the DATA[7:0] pins of the CS493XX. The external memory interface also requires the DATA[7:0] pins so the Parallel host control modes can only be used if external memory is not required.

A detailed description for each parallel host mode will now be given. The following information will be provided for the Intel mode and Motorola mode:

- The pins of the CS493XX which must be used for proper communication
- Flow diagram and description for a parallel byte write
- Flow diagram and description for a parallel byte read

The four registers of the CS493XX's parallel host mode are not used identically. The algorithm used for communicating with each register will be given

as a functional description, building upon the basic read and write protocols defined in the Motorola and Intel sections. The following will be covered:

- Flow diagram and description for a control write
- Flow diagram and description for a control read

Host Message (HOSTMSG) Register, A[1:0] = 00b

7	6	5	4	3	2	1	0
HOSTMSG7	HOSTMSG6	HOSTMSG5	HOSTMSG4	HOSTMSG3	HOSTMSG2	HOSTMSG1	HOSTMSG0

HOSTMSG7–0 Host data to and from the DSP. A read or write of this register operates handshake bits between the internal DSP and the external host. This register typically passes multibyte messages carrying microcode, control, and configuration data. HOSTMSG is physically implemented as two independent registers for input and output (read and write).

Host Control (CONTROL) Register, A[1:0] = 01b

7	6	5	4	3	2	1	0
Reserved	CMPRST	PCMRST	MFC	MFB	HINBSY	HOUTRDY	Reserved

Reserved Always write a 0 for future compatibility.

CMPRST When set, initializes the CMPDATA compressed data input channel. Writing a one to this bit holds the port in reset. Writing zero enables the port. This bit must be low for normal operation. (Write only)

PCMRST When set, initializes the PCMDATA linear PCM input channel. Writing a one to this bit holds the port in reset. Writing zero enables the port. This bit must be low for normal operation. (Write only)

MFC When high, indicates that the PCMDATA input buffer is almost full. (read only)

MFB When high, indicates that the CMPDATA input buffer is almost full. (read only)

HINBSY Set when the host writes to HOSTMSG. Cleared when the DSP reads data from the HOSTMSG register. The host reads this bit to determine if the last host byte written has been read by the DSP. (Read only)

HOUTRDY Set when the DSP writes to the HOSTMSG register. Cleared when the host reads data from the HOSTMSG register. The DSP reads this bit to determine if the last DSP output byte has been read by the host. (read only)

Reserved Always write a 0 for future compatibility.

PCM Data Input (PCMDATA) Register, A[1:0] = 10b

7	6	5	4	3	2	1	0
PCMDATA7	PCMDATA6	PCMDATA5	PCMDATA4	PCMDATA3	PCMDATA2	PCMDATA1	PCMDATA0

PCMDATA7–0 The host writes PCM data to the DSP input buffer at this address. (Write only)

Compressed Data Input (CMPDATA) Register, A[1:0] = 11b

7	6	5	4	3	2	1	0
CMPDATA7	CMPDATA6	CMPDATA5	CMPDATA4	CMPDATA3	CMPDATA2	CMPDATA1	CMPDATA0

CMPDATA7–0 The host writes compressed data to the DSP input buffer at this address. (Write only)

Table 5. Parallel Input/Output Registers

6.2.1. Intel Parallel Host Communication Mode

The Intel parallel host communication mode is implemented using the pins given in Table 6.

The $\overline{\text{INTREQ}}$ pin is controlled by the application code when a parallel host communication mode has been selected. When the code supports $\overline{\text{INTREQ}}$ notification, the $\overline{\text{INTREQ}}$ pin is asserted whenever the DSP has an outgoing message for the host. This same information is reflected by the HOUTRDY bit of the Host Control Register (A[1:0] = 01b).

$\overline{\text{INTREQ}}$ is useful for informing the host of unsolicited messages. An unsolicited message is defined as a message generated by the DSP without an associated host read request. Unsolicited messages can be used to notify the host of conditions such as a change in the incoming audio data type (e.g. PCM --> AC-3).

Mnemonic	Pin Name	Pin Number
Chip Select	$\overline{\text{CS}}$	18
Write Enable	$\overline{\text{WR}}$	4
Output Enable	$\overline{\text{RD}}$	5
Register Address Bit 1	A1	6
Register Address Bit 0	A0	7
Interrupt Request	$\overline{\text{INTREQ}}$	19
DATA7	DATA7	8
DATA6	DATA6	9
DATA5	DATA5	10
DATA4	DATA4	11
DATA3	DATA3	14
DATA2	DATA2	15
DATA1	DATA1	16
DATA0	DATA0	17

Table 6. Intel Mode Communication Signals

6.2.1.1. Writing a Byte in Intel Mode

Information provided in this section is intended as a functional description of how to write control information to the CS493XX. The system designer must insure that all of the timing constraints of the Intel Parallel Host Mode Write Cycle are met.

The flow diagram shown in Figure 24 illustrates the sequence of events that define a one-byte write in Intel mode. The protocol presented in Figure 24 will now be described in detail.

1) The host must first drive the A1 and A0 register address pins of the CS493XX with the address of the desired Parallel I/O Register.

   Host Message: A[1:0]==00b.

   Host Control: A[1:0]==01b.

   PCMDATA: A[1:0]==10b.

   CMPDATA: A[1:0]==11b.

2) The host then indicates that the selected register will be written. The host initiates a write cycle by driving the $\overline{\text{CS}}$ and $\overline{\text{WR}}$ pins low.

3) The host drives the data byte to the DATA[7:0] pins of the CS493XX.

4) Once the setup time for the write has been met, the host ends the write cycle by driving the $\overline{\text{CS}}$ and $\overline{\text{WR}}$ pins high.

6.2.1.2. Reading a Byte in Intel Mode

Information provided in this section is intended as a functional description of how to write control information to the CS493XX. The system designer must insure that all of the timing constraints of the Intel Parallel Host Mode Read Cycle are met.

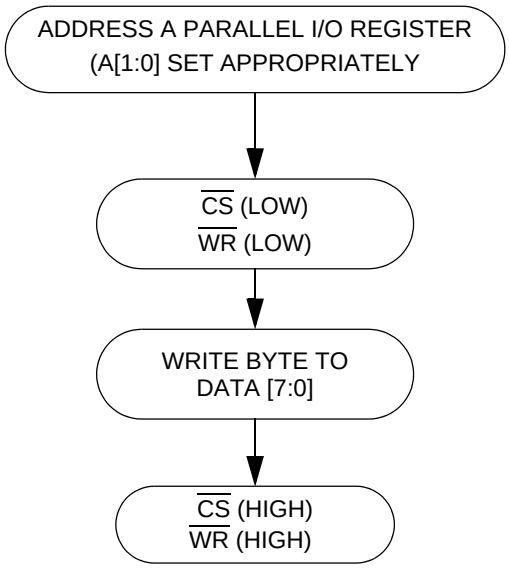

Figure 24. Intel Mode, One-Byte Write Flow Dia-

The flow diagram shown in Figure 25 illustrates the sequence of events that define a one-byte read in Intel mode. The protocol presented in Figure 25 will now be described in detail.

1) The host must first drive the A1 and A0 register address pins of the CS493XX with the address of the desired Parallel I/O Register. Note that only the Host Message register and the Host Control register can be read.

   Host Message: A[1:0]==00b.

   Host Control: A[1:0]==01b.

2) The host now indicates that the selected register will be read. The host initiates a read cycle by driving the $\overline{CS}$ and $\overline{RD}$ pins low.

3) Once the data is valid, the host can read the value of the selected register from the DATA[7:0] pins of the CS493XX.

4) The host should now terminate the read cycle by driving the $\overline{CS}$ and $\overline{RD}$ pins high.

6.2.2. Motorola Parallel Host Communication Mode

The Motorola parallel host communication mode is implemented using the pins given in Table 7. The $\overline{INTREQ}$ pin is controlled by the application code when a parallel host communication mode has been selected. When the code supports $\overline{INTREQ}$ notification, the $\overline{INTREQ}$ pin is asserted whenever the DSP has an outgoing message for the host.

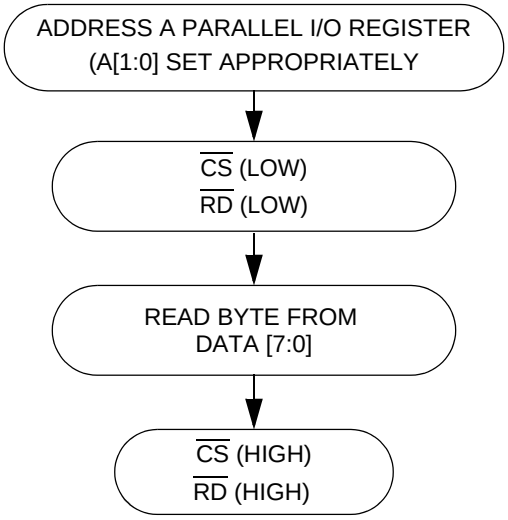

Figure 25. Intel Mode, One-Byte Read Flow Dia-

This same information is reflected by the HOUTRDY bit of the Host Control Register (A[1:0] = 01b).

$\overline{INTREQ}$ is useful for informing the host of unsolicited messages. An unsolicited message is defined as a message generated by the DSP without an associated host read request. Unsolicited messages can be used to notify the host of conditions such as a change in the incoming audio data type (e.g. PCM --> AC-3)

Mnemonic	Pin Name	Pin Number
Chip Select	$\overline{CS}$	18
Data Strobe	$\overline{DS}$	4
Read or Write Select	R/$\overline{W}$	5
Register Address Bit 1	A1	6
Register Address Bit 0	A0	7
Interrupt Request	$\overline{INTREQ}$	19
DATA7	DATA7	8
DATA6	DATA6	9
DATA5	DATA5	10
DATA4	DATA4	11
DATA3	DATA3	14
DATA2	DATA2	15
DATA1	DATA1	16
DATA0	DATA0	17

Table 7. Motorola Mode Communication Signals

6.2.2.1. Writing a Byte in Motorola Mode

Information provided in this section is intended as a functional description of how to write control information to the CS493XX. The system designer must insure that all of the timing constraints of the Motorola Parallel Host Mode Write Cycle are met.

The flow diagram shown in Figure 26 illustrates the sequence of events that define a one-byte write in Motorola mode. The protocol presented in Figure 26 will now be described in detail.

1) The host must drive the A1 and A0 register address pins of the CS493XX with the address of the address of the desired Parallel I/O Register.

   Host Message: A[1:0]==00b.

   Host Control: A[1:0]==01b.

   PCMDATA: A[1:0]==10b.

CMPDATA: A[1:0]==11b.

The host indicates that this is a write cycle by driving the R/$\overline{W}$ pin low.

2) The host initiates a write cycle by driving the $\overline{CS}$ and $\overline{DS}$ pins low.
3) The host drives the data byte to the DATA[7:0] pins of the CS493XX.
4) Once the setup time for the write has been met, the host ends the write cycle by driving the $\overline{CS}$ and $\overline{DS}$ pins high.

6.2.2.2. Reading a Byte in Motorola Mode

The flow diagram shown in Figure 27 illustrates the sequence of events that define a one-byte read in Motorola mode. The protocol presented Figure 27 will now be described in detail.

1) The host must drive the A1 and A0 register address pins of the CS493XX with the address of the desired Parallel I/O Register. Note that only the Host Message register and the Host Control register can be read.

   Host Message: A[1:0]==00b.

   Host Control: A[1:0]==01b.

   The host indicates that this is a read cycle by driving the R/$\overline{W}$ pin high.

2) The host initiates the read cycle by driving the $\overline{CS}$ and $\overline{DS}$ pins low.
3) Once the data is valid, the host can read the value of the selected register from the DATA[7:0] pins of the CS493XX.
4) The host should now terminate the read cycle by driving the $\overline{CS}$ and $\overline{DS}$ pins high.

6.2.3. Procedures for Parallel Host Mode Communication

6.2.3.1. Control Write in a Parallel Host Mode

When writing control data to the CS493XX, the same protocol is used whether the host is writing a control message or an entire executable download image. Messages sent to the CS493XX should be written most significant byte first. Likewise, downloads of the application code should also be performed most significant byte first.

The example shown in this section can be generalized to fit any control write situation. The generic function 'Read_Byte_*()' is used in the following example as a generalized reference to

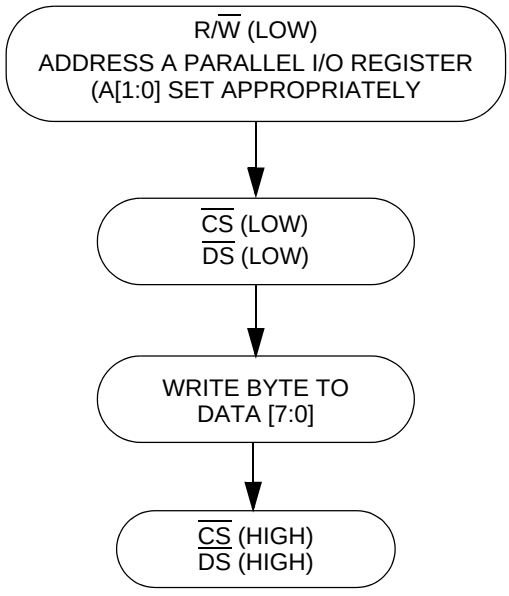

Figure 26. Motorola Mode, One-Byte Write Flow Diagram

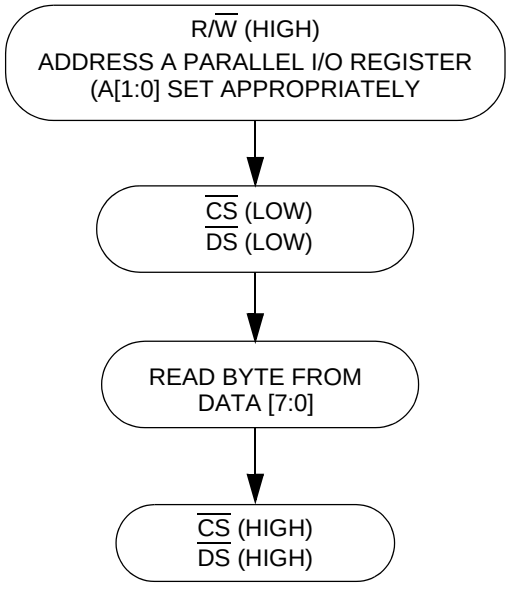

Figure 27. Motorola Mode, One-Byte Read Flow Diagram

either Read_Byte_MOT() or Read_Byte_INT(), and 'Write_Byte_*()' is a generic reference to Write_Byte_MOT() or Write_Byte_INT(). Figure 28 shows a typical write sequence. The protocol presented in Figure 28 will now be described in detail.

1) When the host is communicating with the CS493XX, the host must verify that the DSP is ready to accept a new control byte. If the DSP is in the midst of an interrupt service routine, it will be unable to retrieve control data from the Host Message Register. Please note that 'Read_Byte_*()' and 'Write_Byte_*()' are generic references to either the Intel or Motorola communication protocol.

   If the most recent control byte has not yet been read by the DSP, the host must not write a new byte.

2) In order to determine whether the CS493XX is ready to accept a new control byte the host must check the HINBSY bit of the Host Control Register (bit 2). If HINBSY is high, then the DSP is not prepared to accept a new control byte, and the host should poll the Host Control Register again. If HINBSY is low, then the host may write a control byte into the Host Message Register.

3) The host knows that the DSP is ready for a new control byte at this point and should write the control byte to the Host Message Register (A[1:0] = 00b).

4) If the host would like to write any more control bytes to the CS493XX, the host should once again poll the Host Control Register (return to step 1).

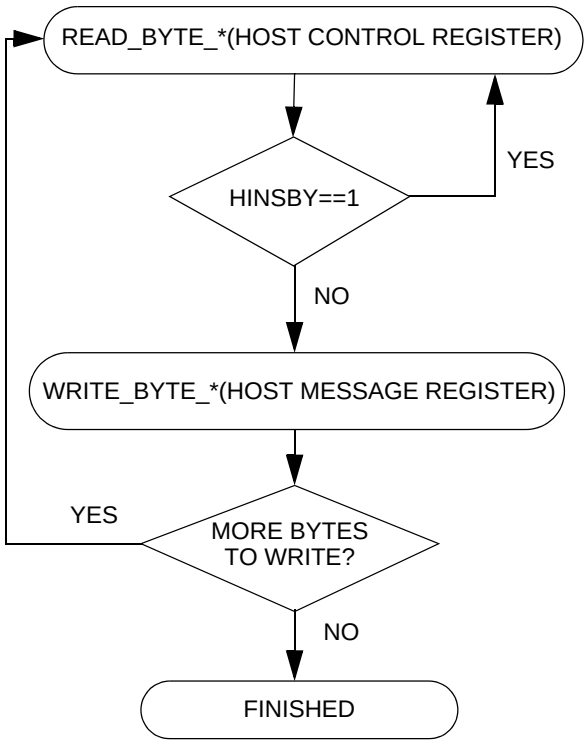

Figure 28. Typical Parallel Host Mode Control Write Sequence Flow Diagram

6.2.3.2. Control Read in a Parallel Host Mode

When reading control data from the CS493XX, the same protocol is used whether the host is reading a single byte or a 6 byte message.

During the boot procedure, a handshaking protocol is used by the CS493XX. This handshake consists of a 3 byte write to the CS493XX followed by a 1 byte response from the DSP. The host must read the response byte and act accordingly. The boot procedure is discussed in Section 8.1, "Host Boot" on page 54.

During regular operation (at run-time), the responses from the CS493XX will always be 6 bytes in length.

The example shown in this section can be used for any control read situation. The generic function 'Read_Byte_*()' is used in the following example as a generalized reference to either Read_Byte_MOT() or Read_Byte_INT(). Figure 29 shows a typical read sequence. The protocol presented in Figure 29 will now be described in detail.

1) Optionally, $\overline{\text{INTREQ}}$ going low may be used as an interrupt to the host to indicate that the CS493XX has an outgoing message. Even with the use of $\overline{\text{INTREQ}}$, HOUTRDY must be checked to insure that bytes are ready for the host during the read process. Please note that $\overline{\text{INTREQ}}$ does not go low to indicate an outgoing message during boot.

2) The host reads the Host Control Register (A[1:0] = 01b) in order to determine the state of

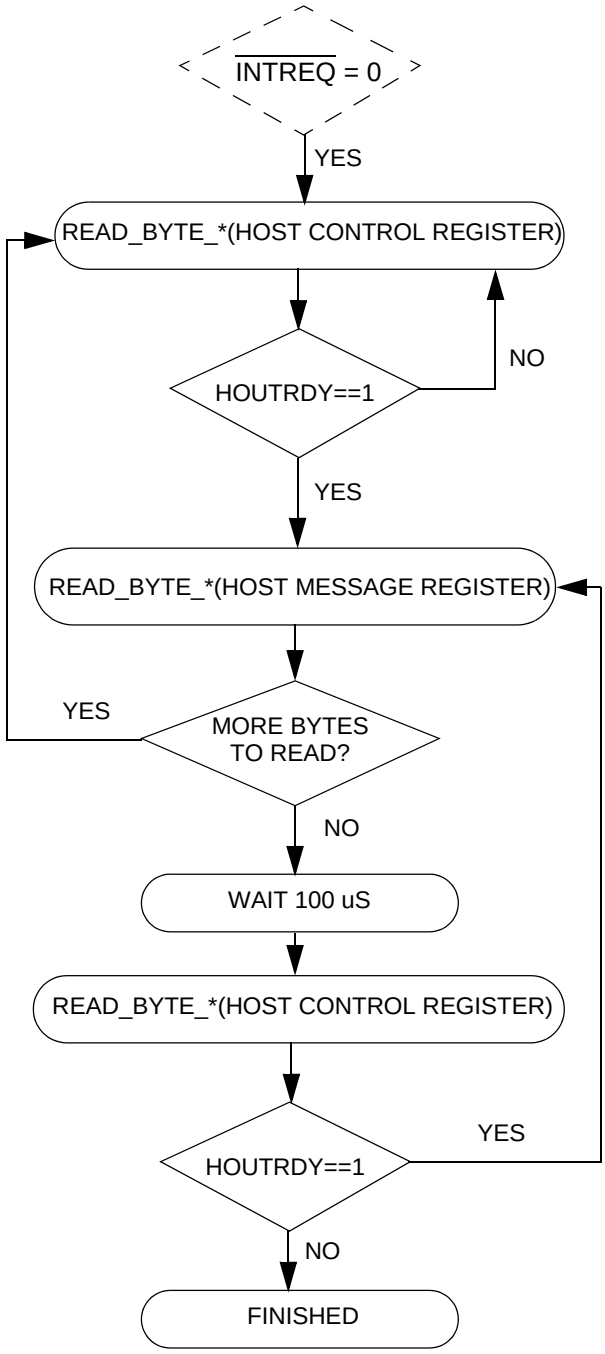

Figure 29. Typical Parallel Host Mode Control Read Sequence Flow Diagram

the communication interface. Please note that 'Read_Byte_*()' is a generalized reference to either Read_Byte_MOT() or Read_Byte_INT().

3) In order to determine whether the CS493XX has an outgoing control byte that is valid, the host must check the HOUTRDY bit of the Host Control Register (bit 1). If HOUTRDY is high, then the Host Message Register contains a valid message byte for the host. If HOUTRDY is low, then the DSP has not placed a new control byte in the Host Message Register, and the host should poll the Host Control Register again.
4) The host knows that the DSP is ready to provide a new response byte at this point. The host can safely read a byte from the Host Message Register (A[1:0] = 00b).
5) If the host expects to read any more response bytes, the host should once again check the HOUTRDY bit (return to step 1). Please refer to one of the application code user's guides to determine the length of messages to read from the CS493XX. Typically this length is 1, 3 or 6 bytes, and can be deduced from the message OPCODE.
6) After the response has been read the host should wait at least 100 uS and check HOUTRDY one final time. If HOUTRDY is high once again this means that an unsolicited message has come during the read process and the host has another message to read (i.e. skip back to step 4 and read out the new message).

7. EXTERNAL MEMORY

If using one of the serial modes, i.e. SPI or I^2C, the system designer has the option of using external memory. The external memory interface is not compatible with the parallel modes since there are shared pins that are needed by each mode.

The external memory interface was designed for autoboot and to extend the data memory range of the DSP during runtime. The application user's guide for a particular code load will inform the system designer if memory is required. If no mention is made of external memory, then external memory is not required for that application.

The external memory interface is implemented on the CS493XX with the following signals: EMAD[7:0], EXTMEM, EMOE, and EMWR. Table 8 shows the pin name, pin description and pin number of each signal on the CS493XX. EMAD[7:0] serve as a multiplexed address and data bus. EMOE is an active-low external-memory data output enable as well as the address latch strobe. EMWR is an active low write enable. EXTMEM serves as the active low chip select output.

Pin Name	Pin Description	Pin Number
/EMOE	* External Memory Output Enable & Address Latch Strobe	5
/EMWR	* External Memory Write Strobe	4
/EXTMEM	External Memory Select	21
EMAD7	Address and Data Bit 7	8
EMAD6	Address and Data Bit 6	9
EMAD5	Address and Data Bit 5	10
EMAD4	Address and Data Bit 4	11
EMAD3	Address and Data Bit 3	14
EMAD2	Address and Data Bit 2	15
EMAD1	Address and Data Bit 1	16
EMAD0	Address and Data Bit 0	17

* - These pins must be configured appropriately to select a serial host communication mode for the CS493XX at the rising edge of RESET

Table 8. Memory Interface Pins

Figure 30, "External Memory Interface" on page 53 illustrates one possible external memory architecture for the CS493XX. Figure 31, "External Memory Read (16-bit address)" on page 53 shows the functional timing of a 16 bit address memory read and Figure 32, "External Memory Write (16-bit address)" on page 53 shows the functional timing of a 16 bit address memory write. It should be noted that this memory example gives the DSP visibility to up to 64 kilobytes of memory.

The external memory address is capable of addressing up to 16 megabytes total through a 24 bit addressing scheme. The address comes from the DSP writing three initial bytes of address consecutively on EMAD[7:0]. Each byte of address is externally latched with the rising edge of EMOE while EXTMEM is high. After the 3-byte address is latched externally, the CS493XX then drives EXTMEM and EMOE low simultaneously to select the external memory. During this time the data is read by the CS493XX.

To extend the example shown in Figures 30 to 32 to allow for a 24-bit address, the system designer would add another latch to the system. The DSP always places the most significant address bits first (see Figures 30, 31, and 32 for details).

It should be noted that there are currently no applications for the CS493XX that use more than 32 kilobytes of external memory (RAM or ROM), which corresponds to only 15 address lines.

7.1. Non-Paged Memory

Non-paged memories can be used for autobooting a single piece of full download application code such as MP3, HDCD, or SRS Circle Surround. A non-paged memory architecture should be used in systems which will need to access a single dsp application code image (32 Kilobyte maximum), which means that only 15 bits would be required to access the entire application code image. The 16th address bit coming from the DSP should be left unconnected. Figure 35 shows the functional timing of an autoboot sequence in which three address cycles are illustrated.

The DSP *always* considers its address space to range from 0x0000 to 0xFFFF. This means that the decoder is unaware of any data which falls outside of this 64 Kilobyte range. When the DSP is performing an autoboot, the process always begins with address 0x0000. This means that the host microcontroller must be involved in memory accesses which exceed the 32 Kilobyte scope of the CS493XX, and the host must also manage access to all pieces of autoboot code which do not

physically reside at location 0x0000. The limitations of a non-paged memory are easily seen, and they can be circumvented using paged memory designs as discussed in the next section.

7.2. Paged Memory

Sometimes it is desirable for the external memory to be paged by the host controller. One application where this is useful is the autoboot mechanism (discussed in Section 8.2, “Autoboot” on page 57). Using paged memory allows multiple dsp firmware applications to be stored in the same memory, with one application code image residing in each 32 kilobyte page.

Paging of the external memory is handled entirely by the host controller. The host controller should directly control all address bits outside of the memory space to be used by the DSP. As 32 kilobyte pages are desired to hold each application code, the DSP would need 15 bits for the address space. The system designer would connect the 15 address signals from the address latches while the host would directly control all address signals above 15 bits to page the memory accordingly.

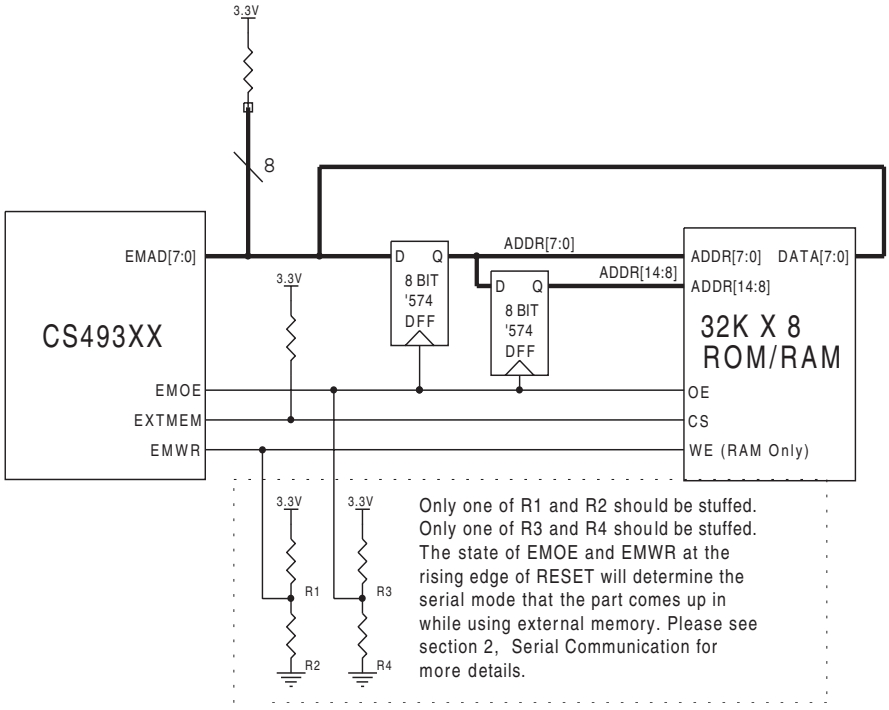

Figure 30. External Memory Interface

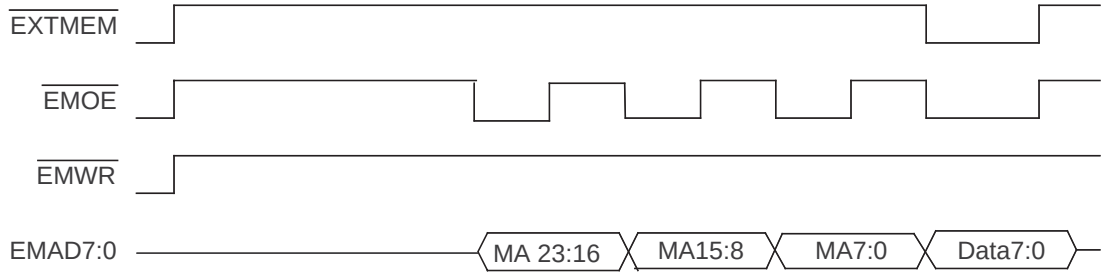

Figure 31. External Memory Read (16-bit address)

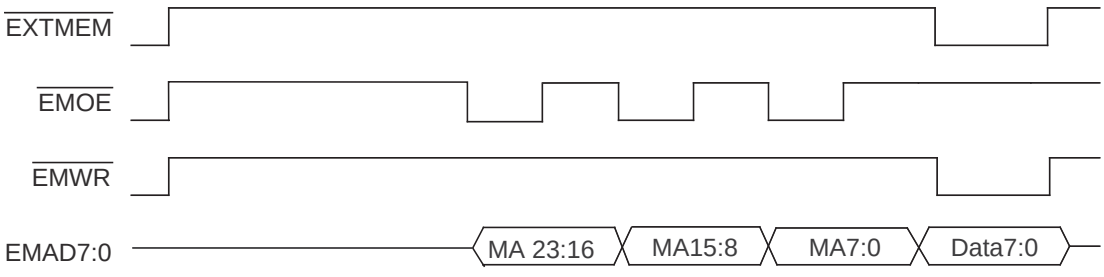

Figure 32. External Memory Write (16-bit address)

8. BOOT PROCEDURE & RESET

In this section the process of booting and downloading to the CS493XX will be covered as well as how to perform a soft reset. Host boot and autoboot and reset are covered in this section.

8.1. Host Boot

A flow diagram of a typical serial download sequence and a typical parallel download sequence will be presented, as well as pseudocode representing a download sequence from the programmers perspective. The pseudocode is written in a general sense where function calls are made to Write_* and Read_*. The * can be replaced by I^2C or SPI for the serial download sequence, and INTEL or MOTO for the parallel download sequence, depending on the mode of host communication. For each case the general download algorithm is the same.

The download and boot procedure is accomplished with RESET (pin 36), and the communication pins discussed in Section 6, "Control" on page 36. The flow diagrams in Figure 33. Typical Serial Boot and Download Procedure, and Figure 34. Typical Parallel Boot and Download Procedure, illustrate typical boot and download procedures. When reading in serial mode, you must check that INTREQ is low to start reading. Similarly, in parallel mode you must check HOUTRDY.

Table 9 defines the boot write messages and Table 10 defines the boot read messages in mnemonic and actual hex value. These messages will be used in the boot sequence.

Hardware configuration messages are used to define the behavior of the DSP's audio ports. A more detailed description of the different hardware configurations can be found in the Section 11, "Hardware Configuration" on page 74.

The software configuration messages are specific to each application. The application code user's guide for each application provides a list of all pertinent configuration messages. Writing the KICKSTART message to the CS493XX begins the audio decode process. The KICKSTART message will also be described in the user's guide for each application. Until the KICKSTART has been sent, the decoder is in a wait state.

MNEMONIC	VALUE
SOFT_RESET	0x000001
RESERVED	0x000002
RESERVED	0x000003
DOWNLOAD_BOOT	0x000004
BOOT_SUCCESS_RECEIVED	0x000005

Table 9. Boot Write Messages

MNEMONIC	VALUE
BOOT_START	0x01
BOOT_SUCCESS	0x02
APPLICATION_FAILURE	0xF0
BOOT_ERROR	0xFA
INVALID_MSG	0xFB
BOOT_ERROR	0xFC
INIT_FAILURE	0xFD
INIT_FAILURE	0xFE
BAD_CHECKSUM	0xFF

Table 10. Boot Read Messages

8.1.1. Serial Download Sequence

The following is a detailed description of a *serial* download sequence for the CS493XX.

> **Note:** When reading from the chip in a serial communication mode, the host must wait for the interrupt request (INTREQ) to fall before starting the read cycle.

1) A download sequence is started when the host issues a hard reset and holds the mode pins appropriately (WR, RD, and PSEL).
2) The host should then send the boot message DOWNLOAD_BOOT (0x000004). This causes the CS493XX to initialize itself for download.
3) If the initialization was successful the CS493XX sends out the boot message BOOT_START (0x01) and the host should proceed to step 5.
4) If initialization fails, the CS493XX sends out an INIT_FAILURE boot message byte (0xFD or 0xFE), INVALID_MSG byte (0xFB), or BOOT_ERROR byte (0xFA or 0xFC) and spins

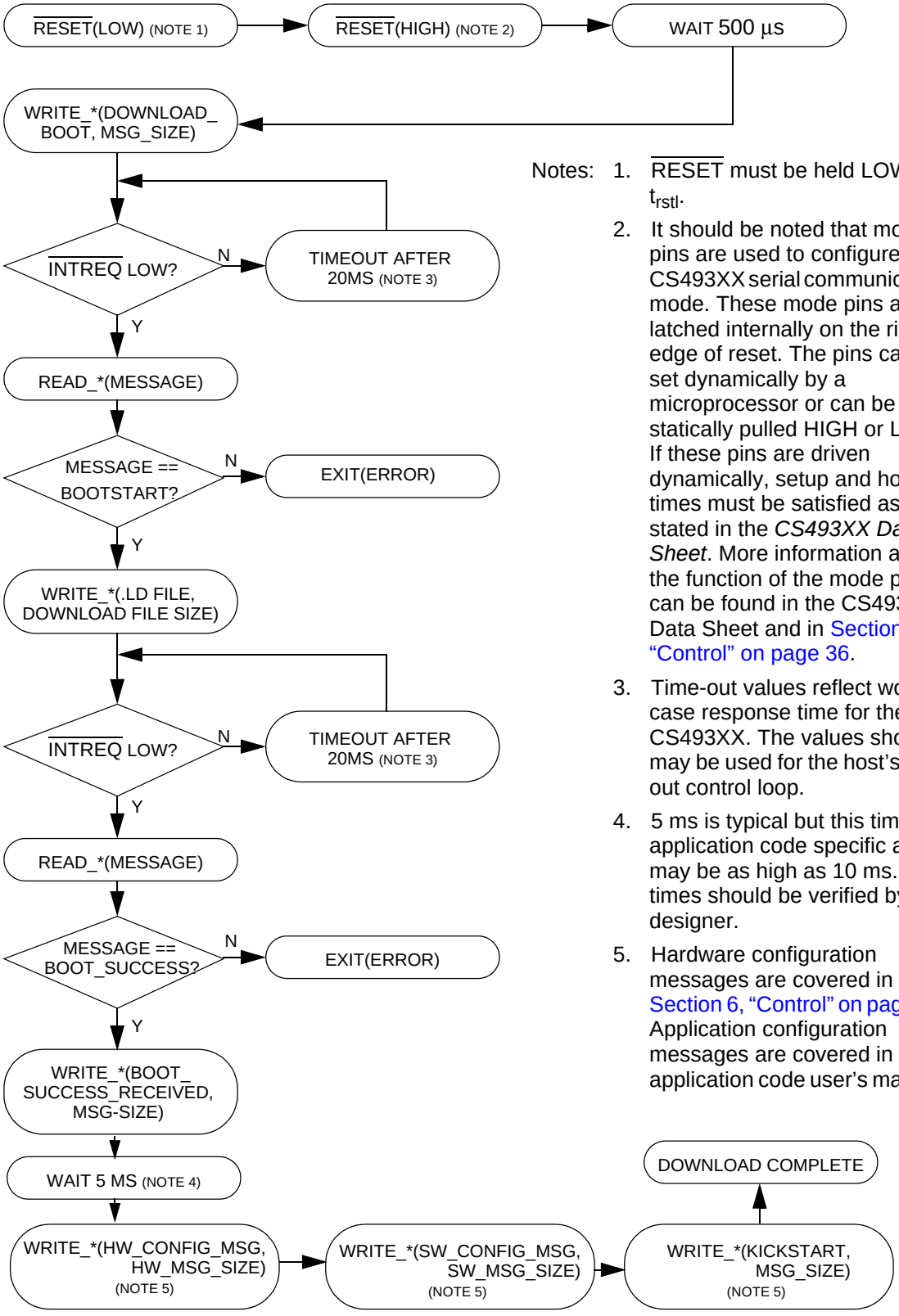

Notes:
1. $\overline{\text{RESET}}$ must be held LOW for t_{rstl}.
2. It should be noted that mode pins are used to configure the CS493XX serial communication mode. These mode pins are latched internally on the rising edge of reset. The pins can be set dynamically by a microprocessor or can be statically pulled HIGH or LOW. If these pins are driven dynamically, setup and hold times must be satisfied as stated in the *CS493XX Data Sheet*. More information about the function of the mode pins can be found in the CS493XX Data Sheet and in Section 6, "Control" on page 36.
3. Time-out values reflect worst case response time for the CS493XX. The values shown may be used for the host's time-out control loop.
4. 5 ms is typical but this time is application code specific and may be as high as 10 ms. Wait times should be verified by the designer.
5. Hardware configuration messages are covered in Section 6, "Control" on page 36. Application configuration messages are covered in each application code user's manual.

Figure 33. Typical Serial Boot and Download Procedure

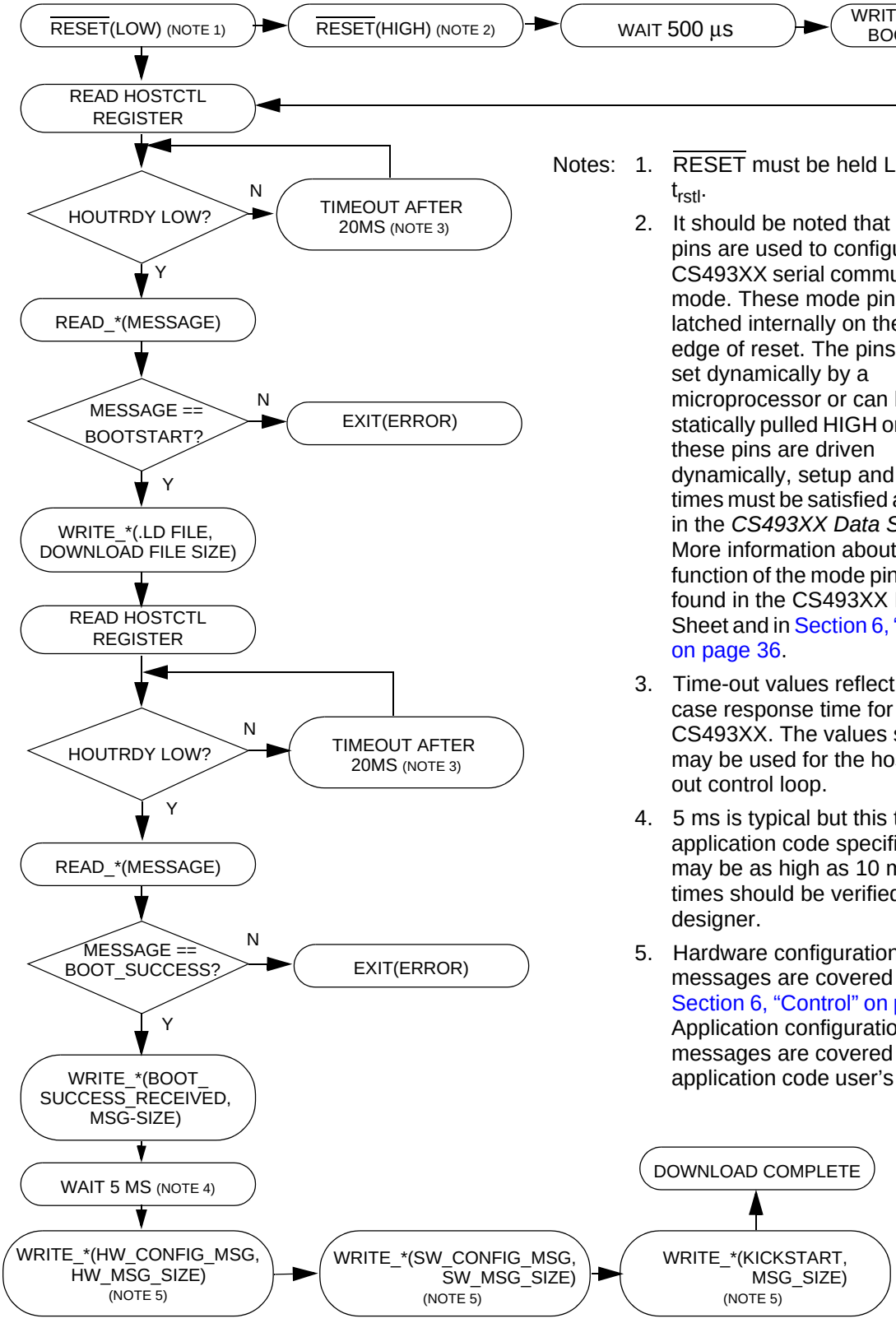

Notes:

1. $\overline{\text{RESET}}$ must be held LOW for t_{rstl}.
2. It should be noted that mode pins are used to configure the CS493XX serial communication mode. These mode pins are latched internally on the rising edge of reset. The pins can be set dynamically by a microprocessor or can be statically pulled HIGH or LOW. If these pins are driven dynamically, setup and hold times must be satisfied as stated in the *CS493XX Data Sheet*. More information about the function of the mode pins can be found in the CS493XX Data Sheet and in Section 6, “Control” on page 36.
3. Time-out values reflect worst case response time for the CS493XX. The values shown may be used for the host’s time-out control loop.
4. 5 ms is typical but this time is application code specific and may be as high as 10 ms. Wait times should be verified by the designer.
5. Hardware configuration messages are covered in Section 6, “Control” on page 36. Application configuration messages are covered in each application code user’s manual.

Figure 34. Typical Parallel Boot and Download Procedure

waiting for a hard reset. The host should re-try steps 1 through 3 and if failure is met again, the serial communication timing and protocol should be inspected.

5) After receiving the BOOT_START byte, the host should write the downloadable image (from the .LD file).
6) The end of the .LD file contains a three byte checksum. If the checksum is good after download, the CS493XX will send a BOOT_SUCCESS message (0x02) to the host. If the checksum was bad, the CS493XX responds with the BAD_CHECKSUM message byte (0xFF) and spins, waiting for hard reset.
7) After reading out the BOOT_SUCCESS byte, the host should send the BOOT_SUCCESS_RECEIVED message (0x000005) which will cause an internal application code reset and allow the downloaded application to run.
8) After waiting 5ms to allow the downloaded application to initialize, the host can send configuration messages for both hardware and software configuration.

8.1.2. Parallel Download Sequence

The following is a detailed description of a *parallel* download sequence for the CS493XX.

> **Note:** When reading from the chip in a parallel communication mode, the host must read the HOSTCTL register and test the HOUTRDY bit before starting the read cycle.

1) A download sequence is started when the host issues a hard reset and holds the mode pins appropriately ($\overline{WR}$, $\overline{RD}$, and PSEL).
2) The host should then send the boot message DOWNLOAD_BOOT (0x000004). This causes the CS493XX to initialize itself for download.
3) If the initialization was successful the CS493XX sends out the boot message BOOT_START (0x01) and the host should proceed to step 5.
4) If initialization fails, the CS493XX sends out an INIT_FAILURE boot message byte (0xFD or 0xFE), INVALID_MSG byte (0xFB), or BOOT_ERROR byte (0xFA or 0xFC) and spins waiting for a hard reset. The host should re-try steps 1 through 3 and if failure is met again, the serial communication timing and protocol should be inspected.
5) After receiving the BOOT_START byte, the host should write the downloadable image (from the .LD file).
6) The end of the .LD file contains a three byte checksum. If the checksum is good after download, the CS493XX will send a BOOT_SUCCESS message (0x02) to the host. If the checksum was bad, the CS493XX responds with the BAD_CHECKSUM message byte (0xFF) and spins, waiting for hard reset.
7) After reading out the BOOT_SUCCESS byte, the host should send the BOOT_SUCCESS_RECEIVED message (0x000005) which will cause an internal application code reset and allow the downloaded application to run.
8) After waiting 5ms to allow the downloaded application to initialize, the host can send configuration messages for both hardware and software configuration.

8.2. Autoboot

Autoboot is a feature available on all DSPs in the CS493XX family which gives the decoder the ability to load application code into itself from an external memory. Because external memory is accessed through the external memory interface, autoboot restricts the host control modes to serial communication (I^2C or SPI). For this section the external memory interface shown in Figure 30, "External Memory Interface" on page 53 can be referenced.

$\overline{RESET}$ and $\overline{ABOOT}$ are the control pins which are used to initiate an autoboot operation by the host controller. It is important to be aware that the $\overline{ABOOT}$ pin also serves as the $\overline{INTREQ}$ pin, which means that it will be driven by the $\overline{CS493XX}$ when not in reset. Due to this constraint, $\overline{ABOOT}$ should be connected to an open-drain output of the microcontroller so as to allow the specified pull-up resistor to generate a logic high level. At the completion of a successful download, $\overline{INTREQ}$ ($\overline{ABOOT}$) becomes an output and the host should no longer drive it.

The timing for an autoboot sequence is illustrated in Figure 35. The sequence is initiated by driving RESET low and placing the decoder into reset. At the rising edge of RESET, the ABOOT, WR, and RD pins are sampled. If ABOOT is low when sampled, and the WR and RD pins are set to configure the device for serial communications, the device will begin to autoboot (PSEL is a don't care for serial communications modes). Section 6.1, "Serial Communication" on page 36 discusses the procedure required for placing the CS493XX into a serial communication mode in more detail. For a more thorough description of ABOOT's behavior after the rising edge of RESET please refer to Section 8.2.1, "Autoboot INTREQ Behavior" on page 60

The EMOE pin of the CS493XX is used for two purposes. It generates clock pulses for the latches, and it is used in conjunction with EXTMEM to enable the outputs of the ROM. The first three rising edges of EMOE are used to latch address bytes, as shown in the diagram. The fourth low pulse of EMOE is used to enable the ROM outputs. When both EXTMEM and EMOE go low, the EMAD[7:0] pins of the DSP become inputs and await the data coming from the ROM.

When comparing the memory system in Figure 30, "External Memory Interface" on page 53 to the timing diagram of Figure 35, "Autoboot Timing Diagram" on page 58 there may appear to be a discrepancy. The timing diagram shows three address cycles, but there are only two latches in the illustration of the memory architecture. This difference is a result of code size limitations. The application code is guaranteed to fit into a 32 Kilobyte space, which means that only 15 address bits will actually be used for retrieving code from the ROM. Thus, the two latches catch the least significant bytes, and the most significant byte is dropped.

In autoboot mode, latching the most significant byte would be perfectly valid since the most significant bits are guaranteed to be zeros (the three bytes represent a true 24-bit address).

The flow chart given in Figure 36, "Autoboot Sequence" on page 59 demonstrates the interaction required by the microcontroller when placing the DSP into autoboot mode. The host must first drive the RESET line low.

After waiting for 175 ms, the application code should be fully downloaded to the DSP, however the designer should note that this time is typical and may vary for each application code. During the wait period, the host should ignore all INTREQ behavior (mask the INTREQ interrupt). The host can then verify that the code has successfully initialized itself by sending a solicited read command to the DSP to check for a known default value. For example, by sending Rd_Audio_Mgr_Request (0x090003) the host will receive Rd_Audio_Mgr_Response (0x890003, 0x000000). If the first read attempt returns an incorrect value, a 5ms wait should be inserted and the read should be repeated. If a second invalid response is read, the entire boot process should then be repeated. When the number returned matches the default value for the variable read, the host can be confident that the application is resident in the DSP and awaiting further instructions. An application code user's guide should be consulted for information about reading a variable from the part.

Hardware configuration messages are used to define the behavior of the DSP's audio ports. A

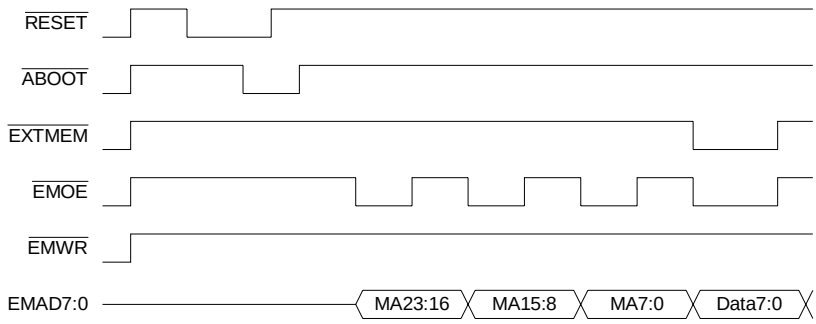

Figure 35. Autoboot Timing Diagram

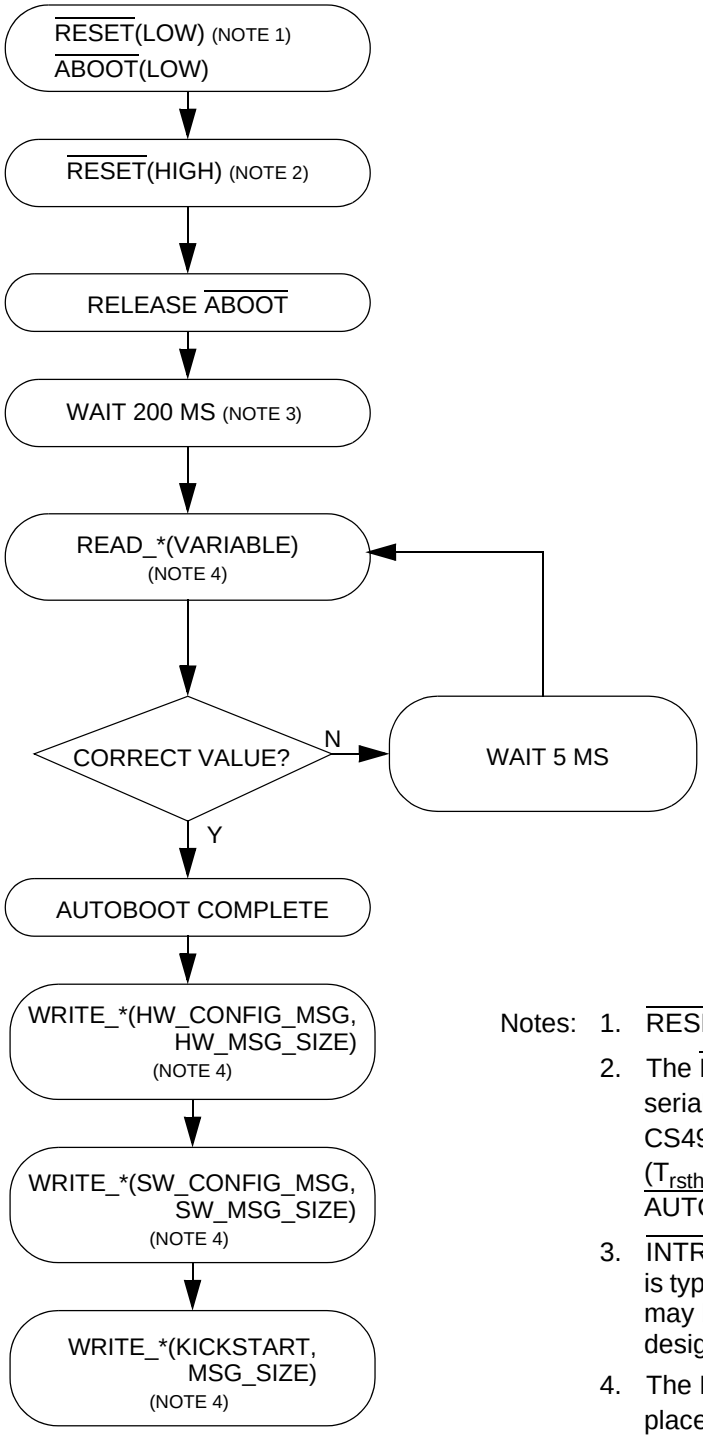

Notes:
1. $\overline{\text{RESET}}$ must be held LOWT_{rstl}.
2. The $\overline{\text{RD}}$ and $\overline{\text{WR}}$ pins must be configured to select a serial communication mode as defined in the CS493XX Datasheet. The setup (T_{rstsu}) and hold (T_{rsthld}) times must be observed for the $\overline{\text{RD}}$, $\overline{\text{WR}}$, and $\overline{\text{AUTOBOOT}}$ pins.
3. $\overline{\text{INTREQ}}$ should be ignored during this period. 200 ms is typical but this time is application code specific and may be higher. Wait times should be verified by the designer.
4. The READ_* and WRITE_* functions are placeholders for the READ_I2C/READ_SPI and WRITE_I2C/WRITE_SPI functions defined in Section 6.1, “Serial Communication” on page 36.

Figure 36. Autoboot Sequence

more detailed description of the different hardware configurations can be found in Section 11, “Hardware Configuration” on page 74.

The software configuration messages are specific to each application. The software user’s guides (AN163, AN163x, AN162, AN162x) for each application code provides a list of all pertinent configuration messages. Writing the KICKSTART message to the CS493XX begins the audio decode process. The KICKSTART message will also be described in the user’s guide for each application. Until the KICKSTART has been sent, the decoder is in a wait state.

8.2.1. Autoboot $\overline{\text{INTREQ}}$ Behavior

It is important to note that $\overline{\text{ABOOT}}$ and $\overline{\text{INTREQ}}$ are multiplexed on pin 20 of the CS493XX. Because this pin serves as an input before reset, and an output after reset, the host should release the $\overline{\text{ABOOT}}$ line after $\overline{\text{RESET}}$ has gone high. As shown in Figure 37, "Autoboot INTREQ Behavior" on page 60, the host must drive $\overline{\text{ABOOT}}$ low around the rising edge of $\overline{\text{RESET}}$.

After the host has released the $\overline{\text{ABOOT}}$ line, it will remain high while the DSP prepares to load code from the external memory. $\overline{\text{INTREQ}}$ should be ignored during download, i.e. interrupts should be masked on the host. The download time will vary according to the size of the download image and the frequency of the main DSP clock. The autoboot sequence is specified to complete within 200 ms (from the rising edge of $\overline{\text{RESET}}$). Note: This time has been tested using the ac3_493263_13.ld application code release, however other application code releases MAY take longer than 200mS as they have may an increased image size and may take longer to initialize all of the internal state variables. It is up to the designer to verify the actual times required for each application code in their system.

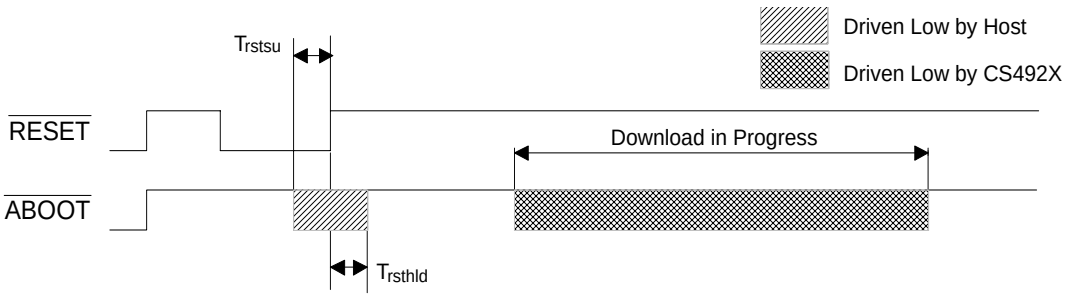

Figure 37. Autoboot $\overline{\text{INTREQ}}$ Behavior

8.3. Decreasing Autoboot Times Using GFABT Codes (Fast Autoboot)

Instead the host toggling the RESET line while ABOOT is held low, the host decrease the Autoboot download time by instead downloading a special code called "GFABT" (Genesis Fast Autoboot) which first speeds up the DSP's core clock, and then automatically causes the DSP to Autoboot itself from external ROM.

Basically, the host should perform a normal serial host boot with one of the GFABT codes (gfabt8.ld, gfabt6.ld or gfabt4.ld) as described in Section 8.1.1, (with ABOOT held high). Immediately following the download of the GFABT code, the DSP will start to act the exact same way as if the host had toggled the RESET line with ABOOT held low, only now, the code image held in the external flash or eprom page will now be downloaded anywhere from 1.5 to 3 times faster than using Autoboot, depending on the gfabt code that was first downloaded.

The normal DSP clock divide factor during Autoboot is 12 (VCO open loop frequency divider). The gfabt8.ld code changes that divide factor to 8, the gfabt6.ld code changes it to 6, and the gfabt4.ld code changes it to 4. Contact your FAE in order to obtain these gfabt codes.

Some sample data for various autoboot times can be seen below in Table 11 using the ac3_pl2_reeq_493264_08.ld application code. It shows that the autoboot times after downloading gfabt8.ld, gfabt6.ld, and gfabt4.ld are approximately 1.5, 2, and 3 times *faster* than a standard autoboot. The typical autoboot time listed in the datasheet of 200 ms will therefore become 135 ms (200ms/1.5), 100ms (200ms/2), and 70ms (200/3) with gfabt8, 6, and 4, respectively.

	Open Loop VCO	Standard Autoboot Times			GFABT4.LD	GFABT6.LD	GFABT8.LD
Application Code Name (8.3 File Name)		ac3_pl~1.ld	dts_6d~1.ld	eff_49~1.ld	ac3_pl~1.ld	ac3_pl~1.ld	ac3_pl~1.ld
Application Code Name (Long File Name)		ac3_pl2_ reeq_ 493264_ 08.ld	dts_6dot1_ reeq_ 493264_ 04.ld	eff_4932xx _14.ld			
Code Size on Disk		94 k	94 k	47 k			
Code Size in Bytes		24 k	24 k	12 k			
Sample 1	12.5 MHz	98 ms	96 ms	48 ms	34 ms	50 ms	65 ms
Sample 2	12.4 MHz	99 ms	98 ms	50 ms	34 ms	50 ms	67 ms
Sample 3	11.7 MHz	97 ms	96 ms	48 ms	32 ms	50 ms	66 ms

Table 11. Reduced Autoboot Times using GFABT8.LD, GFABT6.LD, and GFABT4.LD on a CS493264-CL Rev. G DSP

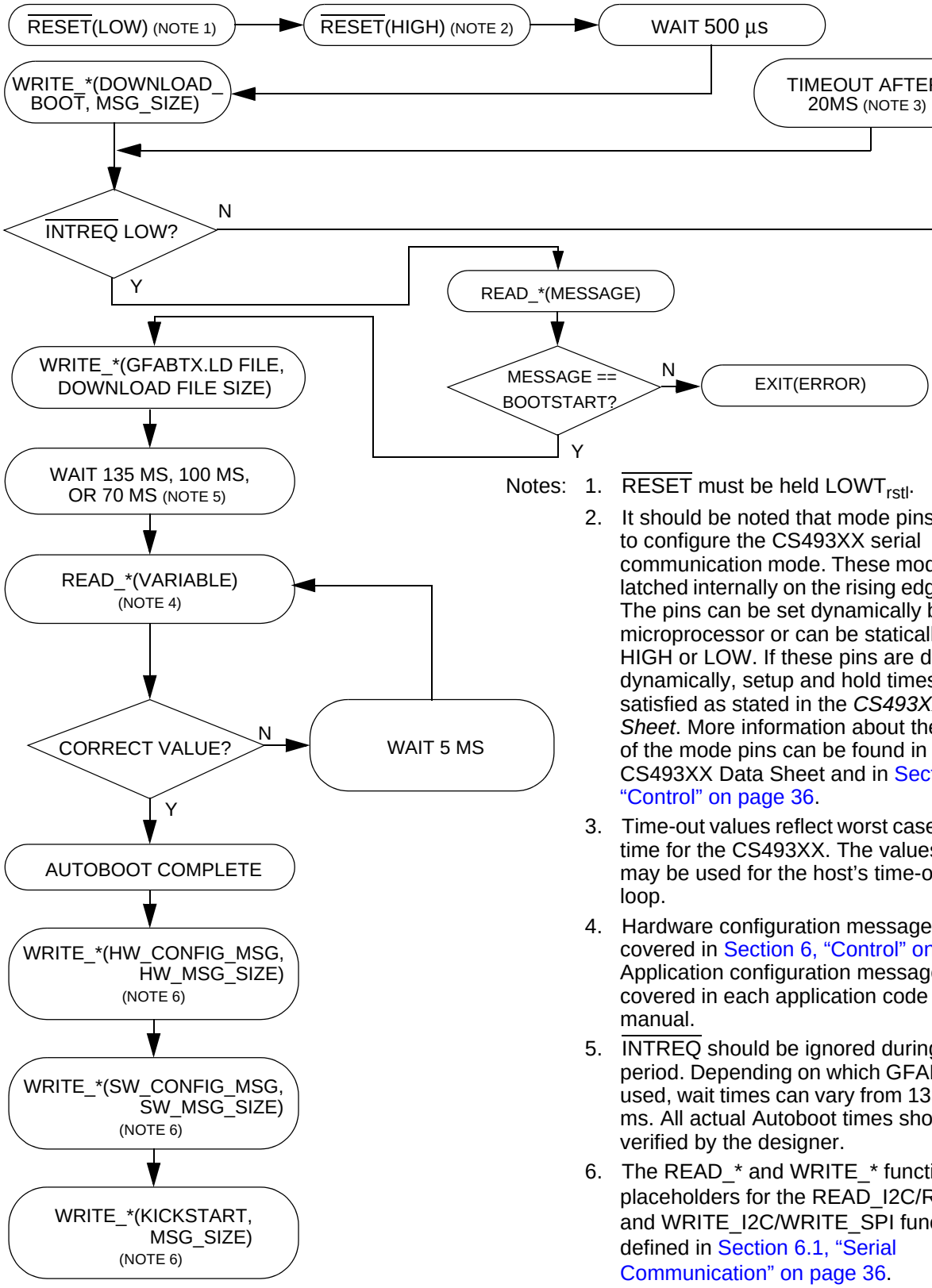

Notes:

1. $\overline{\text{RESET}}$ must be held $\text{LOWT}_{\text{rstl}}$.
2. It should be noted that mode pins are used to configure the CS493XX serial communication mode. These mode pins are latched internally on the rising edge of reset. The pins can be set dynamically by a microprocessor or can be statically pulled HIGH or LOW. If these pins are driven dynamically, setup and hold times must be satisfied as stated in the *CS493XX Data Sheet*. More information about the function of the mode pins can be found in the CS493XX Data Sheet and in Section 6, “Control” on page 36.
3. Time-out values reflect worst case response time for the CS493XX. The values shown may be used for the host’s time-out control loop.
4. Hardware configuration messages are covered in Section 6, “Control” on page 36. Application configuration messages are covered in each application code user’s manual.
5. $\overline{\text{INTREQ}}$ should be ignored during this period. Depending on which GFABT code is used, wait times can vary from 135 ms to 70 ms. All actual Autoboot times should be verified by the designer.
6. The READ_* and WRITE_* functions are placeholders for the READ_I2C/READ_SPI and WRITE_I2C/WRITE_SPI functions defined in Section 6.1, “Serial Communication” on page 36.

Figure 38. Fast Autoboot Sequence Using GFABT Codes

8.3.1. Design Considerations when using GFABT Codes

The designer should be aware that the gfabt codes do not lock the PLL, so therefore the actual time involved with autobooting is subject to the open loop VCO frequency. The PLL is only locked when the command is sent from the host, typically along with the kickstart command. Also, the designer should take into account the access time of the Flash Memory, EPROM, and latches used in their specific design. While there is a temptation to use the gfabt4 code which would theoretically minimize the Autoboot time, the designer should realize that this may result in the DSP to attempting to Autoboot *too quickly*, resulting in clocking times that exceed that of the specified access times of particular external memory devices or the associated latches.

The designer should note that the times listed in Table 11 were taken from 3 sample CS493264-CL Rev. G devices and are in no way a guarantee of the times that your design will achieve as all values are dependent on the open loop frequency of the DSP. Furthermore the times listed in Table 11 DO NOT include the code initialization time (the time spent after download while the code prepares for messages). Therefore, the times listed above should be used as the upper bound on boot time when using the gfabt codes.

8.4. Internal Boot

Certain applications are stored in the ROM of the CS493253, CS493254, CS493263 and CS493264. To enable these applications a special loader called an internal boot assist program must be used. This internal boot assist (or IBA) code can be downloaded using either host boot or autoboot methods. After the IBA program has been downloaded, it enables the internally stored application code. The IBA codes are typically around 350 bytes in size and hence can easily be stored in a host controller.

8.5. Application Failure Boot Message

Each piece of application code is specifically tailored for an individual part in the CS493XX family. Although it is possible to load a piece of code into the wrong chip and receive a BOOT_SUCCESS byte, the code will not initialize itself. In order to facilitate the debug of designs which can accept many members of the CS493XX family, an APPLICATION_FAILURE message is provided.

As mentioned earlier, the host *must* wait for at least 5ms after download before sending configuration messages to the CS493XX. This provides time for the code to initialize itself. If the INTREQ pin is low after the download process has completed, the host should read from the CS493XX. The byte 0xF0 indicates APPLICATION_FAILURE. This byte informs the host that the application code was loaded into an incompatible DSP.

Although most of the messages listed in Tables 9 and 10 are essentially ignored for autoboot, it should be noted that the APPLICATION_FAILURE message is applicable whether host boot or autoboot is used.

8.6. Resetting the CS493XX

Resetting the CS493XX uses a combination of software and hardware. To reset the device, a previous application must have been downloaded. The flow diagram in Figure 39, "Performing a Reset" on page 64 shows the procedure for performing a reset.

The following is a detailed description of a reset sequence to the CS493XX. All writes and reads with the CS493XX should follow the protocol given in Section 6, “Control” on page 36.

1) Reset begins when the host issues a hard reset and holds the mode pins appropriately (WR, RD, and PSEL) as described in Section 6, “Control” on page 36. It is assumed that the communication protocol is followed for whichever communication mode is chosen by the host.
2) The host should then send the message SOFT_RESET (0x000001). This will reset the previously downloaded application with all of the hardware configurations in their default states. The application code user’s guide for each application lists those parameters which are affected by a SOFT_RESET.
3) After waiting 5 ms to allow the downloaded

application to initialize, the host can send configuration messages for both hardware and software configuration.

This method of resetting the DSP is usually referred to as a "soft reset" even though it involves toggling the reset pin.

Table 12 lists some possible external memory configurations for each DSP, in conjunction with IBA codes stored in the host microcontroller. The table provides a list of the ROM content, the size of the combined memory images, the recommended page size, and the number of discrete pages required. The examples also include several figures which present the different ROM configurations as composite memory images.

The CS49292, CS493102, and CS493112 all have special memory requirements since they must have access to external SRAM (70nS or faster) during the decoding of AAC Multichannel (5.1 Channel) audio. More specifically this SRAM requirement is ONLY required for AAC application code which is capable of outputting 5.1 discrete channels, but is not required of application code that offers a 2 channel downmixed output.

Also, for the CS49330, there are certain releases THX Surround EX (5.1 Channel and 7.1 Channel versions), and THX Ultra2 Cinema (7.1 Channel version only) application codes that offer additional all-channel delay, and for this a 1Mbit or 2Mbit, 70nS SRAM is also required. The THX Surround EX application codes (5.1 Channel or 7.1 Channel) nor the THX Ultra2 Cinema code do not require external SRAM. Please refer to the CS4932X/CS49330 Part Matrix vs. Code Matrix for more detail about each particular application code.

The speed of external ROM or Flash Memory need only be 330nS (or faster) which stores the application codes, while the speed of the SRAM must be 70nS or faster.

8.7. External Memory Examples

8.7.1. Non-Paged Autoboot Memory

The most rudimentary memory design discussed above is the non-paged memory. In a non-paged design, the DSP can only access one item in memory which could be either a single full download code load. The memory image given in

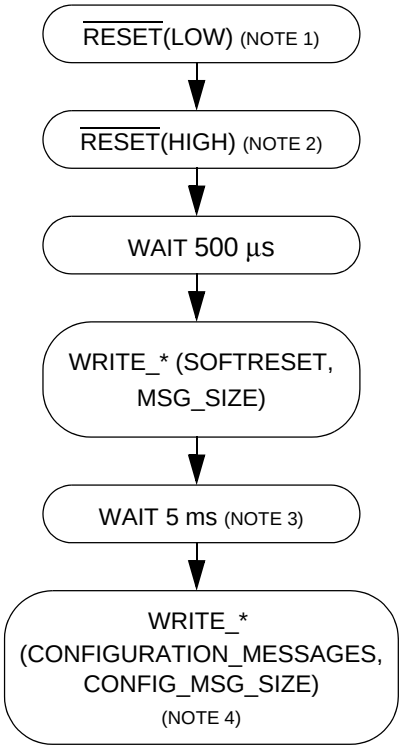

Notes:
1. $\overline{\text{RESET}}$ must be held LOW for t_{rstl}.
2. It should be noted that mode pins are used to configure the CS493XX communication mode. These mode pins are latched internally on the rising edge of reset and can be set dynamically by a microprocessor or can be statically pulled HIGH or LOW. If these pins are driven dynamically, setup and hold times must be satisfied as stated in the CS493XX Datasheet. More information about the function of the mode pins can be found in the CS493XX Datasheet and in Section 6, "Control" on page 36.
3. 5 ms is typical but this time is application code specific and may be as high as 10 ms. Wait times should be verified by the designer.
4. Configuration messages determine both hardware and software configuration. Hardware configurations are described in Section 11 of this manual. Software application configuration messages are described in the Application Code User's Guide for the code being used.

Figure 39. Performing a Reset

ROM Content	Image Size	Number of Pages Required	IBA Code(s) Stored in Host	Type of Design
CS493254				
N/A, All IBA codes are loaded using Host Boot technique	N/A, All IBA codes are loaded using Host Boot technique	N/A, All IBA codes are loaded using Host Boot technique	Dolby Digital with PL II, C.O.S.	Dolby Digital with Pro Logic II 5.1 Channel System
Dolby Digital with PLII + Cinema Re-EQ, HDCD	32 + 32 = 64 Kbytes	2	C.O.S.	Enhanced Dolby Digital with Pro Logic II 5.1 Channel System
CS493264				
N/A, All IBA codes are loaded using Host Boot technique	N/A, All IBA codes are loaded using Host Boot technique	N/A, All IBA codes are loaded using Host Boot technique	Dolby Digital with PL II, C.O.S., DTS	Enhanced Dolby Digital/ DTS 5.1 Channel System
Dolby Digital with C.E.S., MPEG Multichannel with C.E.S., DTS with C.E.S., MP3	32 * 4 pages = 128 Kbytes	4	C.O.S.	Basic 6.1 Channel System
Dolby Digital with PLII with C.E.S., MPEG Multichannel with PLII, DTS-ES, DTS Neo:6	32 * 4 pages = 128 Kbytes	4	C.O.S.	Enhanced 6.1 Channel System
Dolby Digital with PLII with C.E.S., MPEG Multichannel with PLII, DTS-ES with PLII, DTS Neo:6, HDCD, LOGIC7, MP3, Virtual Dolby Digital with VMAx VirtualTheater	32 * 8 = 256 Kbytes	8	C.O.S.	Premium 6.1/7.1 Channel System
CS493292				
Dolby Digital with PLII with C.E.S., MPEG Multichannel with PLII, DTS-ES, DTS Neo:6, HDCD, SRS Circle Surround II, C.O.S., MPEG-2: AAC	32 * 8 = 256 Kbytes	8	N/A, No IBA Codes not available for the CS493292	Premium 6.1/7.1 Channel System with AAC Support

Table 12. Memory Requirements for Example 5.1, 6.1 and 7.1 Channel Systems

Figure 40 is an example of a non-paged memory image.

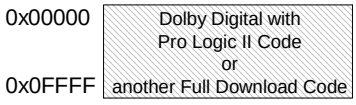

Figure 40. Non-Paged Memory

Only 15 of the 16 output bits of the address latches would be connected to address bits A0-A14 of the external ROM, in order to have access to the single application code stored in the 32 kilobyte non-paged memory. The host is completely isolated from memory accesses in this situation. Once the hardware has been designed, the DSP itself will be responsible for all communication with the ROM.

8.7.2. 32 Kilobyte Paged Autoboot Memory

An external memory architecture which is paged on 32 Kilobyte boundaries offers the higher end system the ability to store several full download or IBA application codes in each 32 Kilobyte page. Figure 41 shows an example of a 32 Kilobyte paged memory image for a the premium 6.1/7.1 channel system describe in Table 12 above.

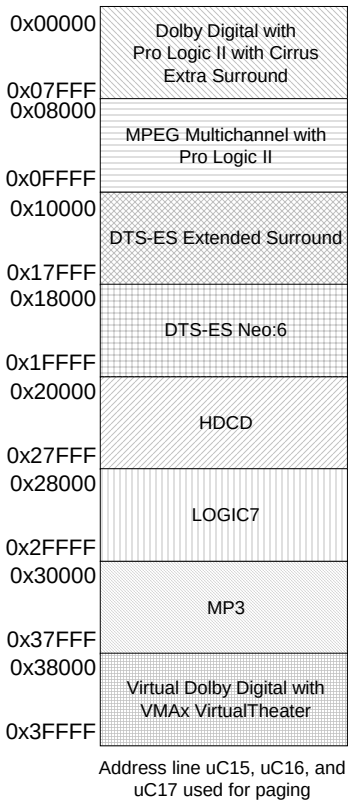

Figure 41. Example Contents of a Paged 32 Kilobytes External Memory (Total 256 Kilobytes)

The flow diagram given in Figure 36 demonstrates the interaction required by the microcontroller during autoboot. After placing the decoder into a reset state, the host selects the page in memory containing first code by driving uC15 to a low state. The host also drives ABOOT low and holds it in a low state until the rising edge of RESET to initiate autoboot. As noted in the autoboot section, the ABOOT pin should be connected to an open-drain output of the microcontroller so as to allow the specified pull-up resistor to generate the high value. The open-drain driver is required because the DSP will begin using the pin as an output after a successful download (INTREQ and ABOOT are multiplexed on the same pin).

After waiting for 175 ms, the download should have completed. During the wait period, the host should ignore all INTREQ behavior (mask the INTREQ interrupt). The host can then verify that the code has successfully initialized itself by reading a variable from the application and checking the returned value against the default value. Any variable can be used for the verification step, but a robust design will select a variable whose value is neither all 0's nor all 1's. If the first read attempt returns an incorrect value, a 5 ms wait should be inserted and the read should be repeated. If a second invalid number is read, the entire boot process should be repeated. When the number returned matches the default value for the variable read, the host knows that the application is resident in the DSP and awaiting further instruction. Please see Section 8.2, "Autoboot" on page 57 for more information.

For systems that would prefer to store all application codes in an external parallel Flash Memory (vs. a OTP EPROM) in order to realize a "field-upgradable" system, please contact dsp_support@crystal.cirrus.com for information about how to control the GPIO pins of the DSP via messaging to the SPI or I^2C port.

8.8. CDB49300-MEMA.0

The CDB49300-MEMA.0 is an external memory adapter card designed for use with the CDB4923/CDB4930 REV-A.0 Evaluation Board. The schematic for the CDB49300-MEMA.0 is shown in Figure 42. This board is an example of one possible external memory configuration.

In addition to autobooting from external EPROM, certain application codes require real-time access to external SRAM, such as decoding of AAC Multichannel streams, which have a 5.1 channel output. These applications require that the DSP has real-time access to 70nS (or faster) 32 Kilobyte SRAM. The 128 Kilobyte SRAM on the CDB49300-MEMA.0 is made accessible by the DSP when the host drives uC18 high. The external 256 Kilobyte EPROM is accessible to the DSP when the host controller drives uC18 low. The with uC15, uC16, and uC17 lines are used to page between the various code images.

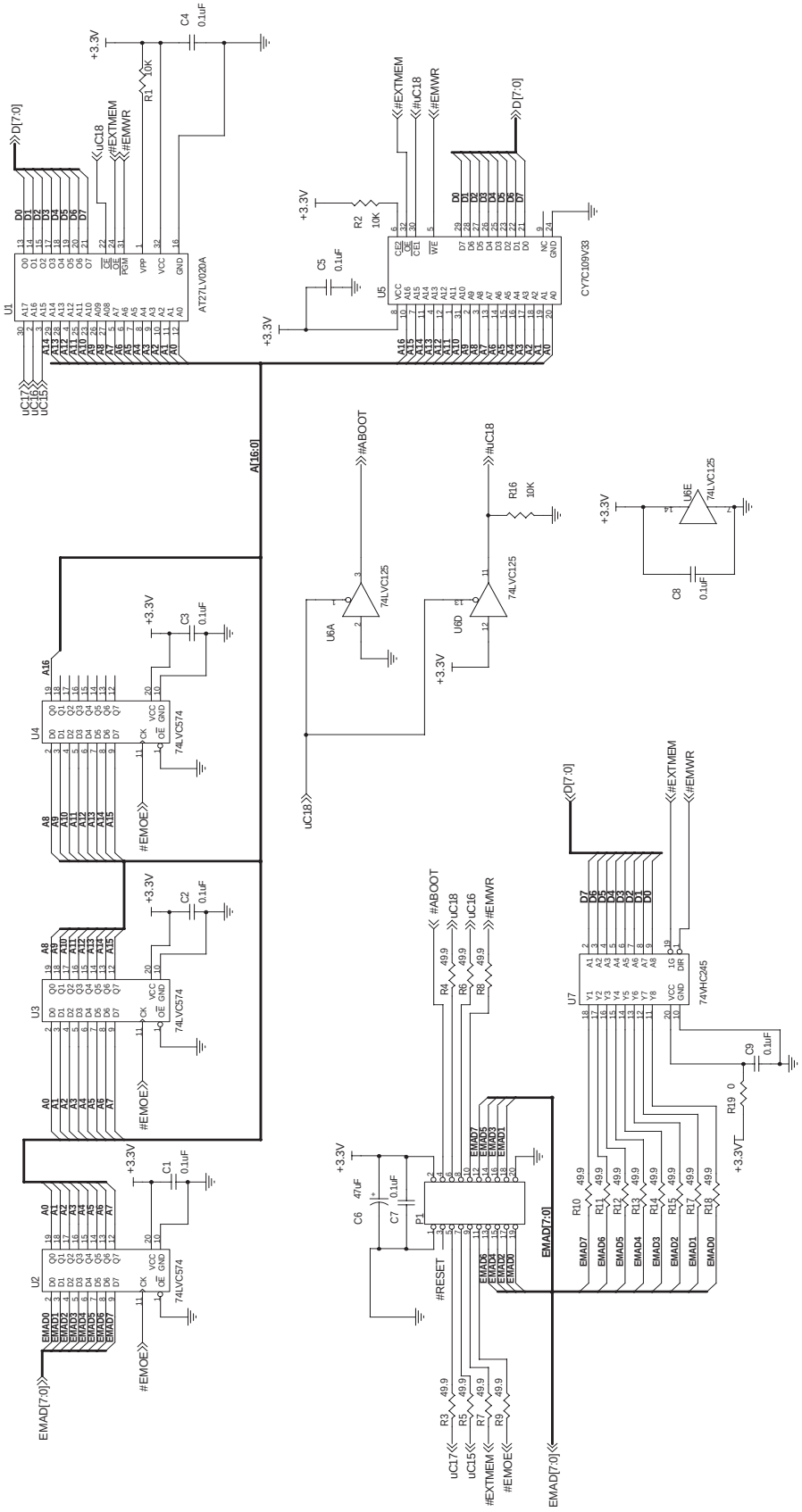

Figure 42. CDB49300-MEMA.0 Daughter Card for the CDB4923/30-REV-A.0

9. HARDWARE CONFIGURATION

After download or soft reset, and before kickstarting the application (please see the Audio Manager in the Application Messaging Section of any Application Code User's Guide for more information on kickstarting), the host has the option of changing the default hardware configuration. Hardware configuration messages are used to physically reconfigure the hardware of the audio decoder, as in enabling or disabling address checking for the serial communication port. Hardware configuration messages are also used to initialize the data type (i.e., PCM or compressed) and format (e.g., I^2S, left justified, etc.) for digital data inputs, as well as the data format and clocking options for the digital output port.

In general, the hardware configuration can only be changed immediately after download or after soft reset. However, some applications provide the capability to change the input ports without affecting other hardware configurations after sending a special Application Restart message (please see the Audio Manager in any Application Code User's Guide to determine whether the Application Restart message is supported). Section 11.4 at the end of this chapter will describe how to construct a hardware configuration message.

10. DIGITAL INPUT & OUTPUT

The CS493XX supports a wide variety of data input and output mechanisms through various input and output ports. Hardware availability is entirely dependent on whether the software application code being used supports the required mode. This data sheet presents most of the modes available with the CS493XX hardware. This does not mean that all of the modes are available with any particular piece of application code. The application code user's guide for the particular code being used should be referenced to determine if a particular mode is supported. In addition if a particular mode is desired that is not presented, please contact your sales representative as to its availability.

10.1. Digital Audio Formats

This subsection will describe some common audio formats that the CS493XX supports. It should be noted that the input ports use up to 24-bit PCM resolution and 16-bit compressed data word lengths. The output port of the CS493XX provides up to 24-bit PCM resolution.

10.1.1.I²S

Figure 43, "I²S Format" on page 69 shows the I²S format. For I²S, data is presented most significant bit first, one SCLK delay after the transition of LRCLK and is valid on the rising edge of SCLK. For the I²S format, the left subframe is presented when LRCLK is low and the right subframe is presented when LRCLK is high. SCLK is required to run at a frequency of 48Fs or greater on the input ports.

10.1.2.Left Justified

Figure 44 shows the left justified format with a rising edge SCCLK. Data is presented most significant bit first on the first SCLK after an LRCLK transition and is valid on the rising edge of SCLK. For the left justified format, the left subframe is presented when LRCLK is high and the right subframe is presented when LRCLK is low. The left justified format can also be programmed for data to be valid on the falling edge of SCLK. SCLK is required to run at a frequency of 48Fs or greater on the input ports.

10.1.3.Multichannel

Figure 45 shows the multichannel format. In this format up to 6 channels of audio are presented on one data line with M bits per channel. Channels 0, 2, and 4 are presented while the LRCLK is high and channels 1, 3, 5 are presented while the LRCLK is low. Data is valid on the rising edge of SCLK and is presented most significant bit first. It should be noted that in the multichannel modes the SCLK rate must be greater than the number of bits per channel multiplied by the number of channels. In the example SCLK must be greater than M * 6.

Because each of the ports is fully configurable (SCLK polarity, LRCLK polarity, Word Width, SCLK Rate) not all modes have been presented.

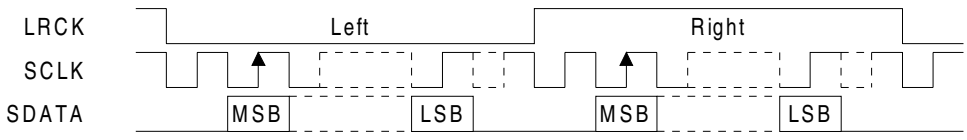

Figure 43. I²S Format

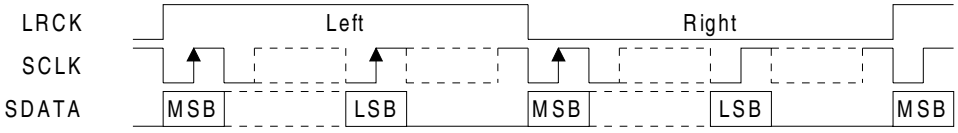

Figure 44. Left Justified Format (Rising Edge Valid SCLK)

10.2. Digital Audio Input Port

The digital audio input port, or DAI, is used for both compressed and PCM digital audio data input. In addition this port supports a special clocking mode in which a clock can be input to directly drive the internal 33 bit counter. Table 13, "Digital Audio Input Port," on page 70 shows the pin names, mnemonics and pin numbers associated with the DAI.

Pin Name	Pin Description	Pin Number
SDATAN1 STCCLK2	Serial Data In Secondary STC clock	22
SCLKN1	Serial Bit Clock	25
LRCLKN1	Frame Clock	26

Table 13. Digital Audio Input Port

The DAI is fully configurable including support for I²S, left justified and multichannel formats. In addition the DAI can be programmed for slave clocks, where LRCLKN1 and SCLKN1 are inputs, or master clocks, where LRCLKN1 and SCLKN1 are outputs. In order for clocks to be master, the internal PLL must be used.

STCCLK2 can also be programmed to drive the internal 33 bit counter. This counter would typically be driven by a 90kHz clock. The internal counter is used by certain application code for audio/video synchronization purposes.

10.3. Compressed Data Input Port

The compressed data input port, or CDI, can be used for both compressed and PCM data input. Table 14 shows the mnemonic, pin name and pin number of the pins associated with the CDI port on the CS493XX.

Pin Name	Pin Description	Pin Number
SDATAN2 CMPDATA	Serial Data In Compressed Data In	27
SCLKN2 CMPCLK	Serial Bit Clock	28
LRCLKN2 CMPREQ	Frame Clock Data Request Out	29

Table 14. Compressed Data Input Port

The CDI is fully configurable including support for I²S, left justified and multichannel formats. The CDI can also be programmed for slave clocks, where LRCLKN2 and SCLKN2 are inputs, or master clocks, where LRCLKN2 and SCLKN2 are outputs. In order for clocks to be mastered, the internal PLL must be used.

In addition the CDI can be configured for bursty compressed data input. Bursty audio delivery is a special format in which only clock (CMPCLK) and data (CMPDAT) are used to deliver compressed data to the CS493XX (i.e. no frame clock or LRCLK). A third line, CMPREQ, is used to request more data from the host. It is an indicator that the CS493XX internal FIFO is low on data and can accept another burst. Typically this mode is used for compressed data delivery where asynchronous data transfer occurs in the system, i.e. in a system such as a set-top box or HDTV. PCM data can not be presented in this mode since data is interpreted as a continuous stream with no word boundaries.

10.4. Byte Wide Digital Audio Data Input

Two types of byte wide parallel delivery are supported by the CS493XX. If using one of the parallel control modes described in Section 6.2, "Parallel Host Communication" on page 44, then the parallel interface can also be used for

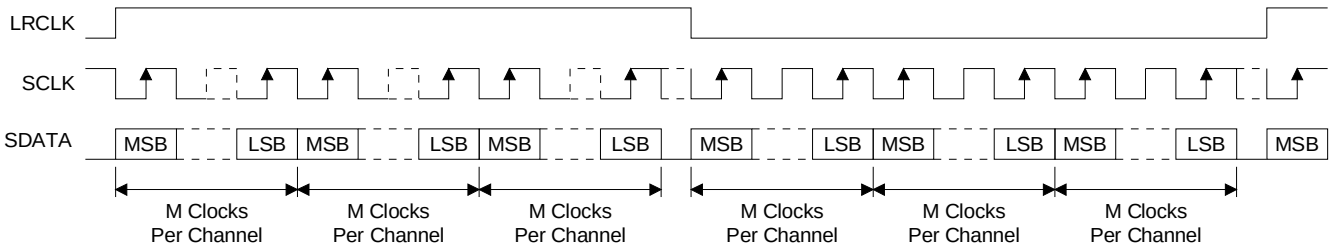

Figure 45. Multichannel Format

delivering data. If using I2C or SPI control, then parallel delivery can still be used using CMPCLK and GPIO[7:0].

10.4.1.Parallel Delivery with Parallel Control

If using the Intel or Motorola Parallel host interface mode, the system designer can also choose to deliver data through the byte wide parallel port. The delivery mechanism is identical to that discussed in Section 6.2, “Parallel Host Communication” on page 44.

The compressed data input register (CMPDAT) receives bytes of data when the host interface writes to address 11b (A1 and A0 are both high). The host should check level of the Compressed Data FIFO before sending data. The CS493XX has two means of indicating the Compressed Data FIFO level. The MFB bit in the Host Control Register is one indicator of the Compressed Data FIFO level. The MFB bit remains low until the FIFO threshold has been reached. The alternative is to use the CMPREQ pin of the CS493XX. The CMPREQ pin also remains low until the FIFO threshold has been reached. The host has the option of using either CMPREQ or the MFB bit.

Data should be delivered to the CS493XX in blocks of data. Before each block is delivered, the host should check the MFB bit (or the CMPREQ pin). If the MFB bit (CMPREQ) is low, then the host can deliver a block of data one byte at a time. If the MFB bit (CMPREQ) is high, no more data should be sent to the CS493XX. Once the MFB bit (CMPREQ) has gone low again, the host may send another block of compressed audio data.

During delivery of a block of data the FIFO threshold should not be checked. In other words the FIFO indicators are level sensitive and indicate that a block can be delivered when they are low. They may return high during the data delivery. When this happens there is still room for the remaining bytes of the block.

The PCM data input register (PCMDAT) receives bytes of data when the host interface writes to address 10b (A1 high, A0 low). The MFC bit in the Host Control Register is an indicator of the PCM FIFO level. The MFC bit remains low until the FIFO threshold has been reached.

The PCMRST bit of the CONTROL register provides absolute software/hardware synchronization by initializing the input channel to uniquely recognize the first write to the byte-wide PCMDATA port. Toggling PCMRST high and low informs the DSP that the next sample read from the PCMDATA port is the first sample of the left channel. In this fashion, the CS493XX can translate successive byte writes into a variable number of channels with a variable PCM sample size. In the most simple case, the CS493XX can receive stereo 8-bit PCM one byte at a time with the internal DSP assigning the first 8-bit write (after PCMRST) to the left channel and the second 8-bit write to the right channel. For 24-bit PCM, it assigns the first three 8-bit writes (after PCMRST) to the left channel and the next three writes to the right channel. Before starting PCM transfer, or to initiate a new PCM transfer, the PCMRST bit must be toggled as described above to insure data integrity.

Data must be delivered to the CS493XX in blocks of data. The block size is set through a hardware configuration message. Before each block is delivered, the host should check the MFC bit. If the MFC bit is low, then the host can deliver a block of data one byte at a time. If the MFC bit is high, no more data should be sent to the CS493XX. Once the MFC bit has gone low again, the host may send another block of PCM audio data. The MFC bit is FIFO level sensitive. In other words, it may change during the transfer of a block. The host should complete the block transfer and ignore the MFC bit until the block transfer is complete.

10.4.2.Parallel Delivery with Serial Control

When using I^2C or SPI control, bytewide delivery of data can still be achieved using SCLKN2(CMPCLK) and GPIO[8:0]. In this mode the bytewide parallel data is clocked into the part on the transition of CMPCLK.

In this mode CMPREQ can be used as the FIFO threshold indicator. When CMPREQ is low it means that the CS493XX can receive another block of data.

10.5. Digital Audio Output Port

The Digital Audio Output port, or DAO, is the port used for digital output from the DSP. Table 15 shows the signals associated with the DAO. As with the input ports the clocks and data are fully configurable via hardware configuration.

Pin Name	Pin Description	Pin Number
AUDATA3, XMT958	Serial Data Out IEC60958 Transmitter	3
AUDATA2	Serial Data Out	39
AUDATA1	Serial Data Out	40
AUDATA0	Serial Data Out	41
LRCLK	Frame Clock	42
SCLK	Serial Bit Clock	43
MCLK	Master Clock	44

Table 15. Digital Audio Output Port

MCLK is the master clock and is firmware configurable to be either an input or an output. If MCLK is to be used as an output, the internal PLL must be used. As an output MCLK can be configured to provide a 128Fs, 256Fs or 512Fs clock, where Fs is the output sample rate.

SCLK is the bit clock used to clock data out on AUDATA0, AUDATA1, AUDATA2 and AUDATA3. LRCLK is the data framing clock whose frequency is typically equal to the sampling frequency. Both LRCLK and SCLK can be configured as either inputs (Slave mode) or outputs (Master mode). When LRCLK and SCLK are configured as inputs, MCLK is a don't care as an input. When LRCLK and SCLK are configured as outputs, they are derived from MCLK. Whether MCLK is configured as an input or an output, an internal divider from the MCLK signal is used to produce LRCLK and SCLK. The ratios shown in Table 16 give the possible SCLK values for different MCLK frequencies (all values in terms of the sampling frequency, Fs).

MCLK (Fs)	SCLK (Fs)					
	32	48	64	128	256	512
128	X		X			
384**	X	X	X			
256	X		X	X	X	
512	X		X	X	X	X

** For MCLK as an input only

Table 16. MCLK/SCLK Master Mode Ratios

AUDAT0 is configurable to provide six, four, or two channels. AUDATA1, AUDATA2 and AUDATA3 can both output two channels of data. Typically the AUDATA0, AUDATA1, AUDATA2 and AUDATA3 outputs are used in left justified, I2S or right justified modes. AUDATA0, AUDATA1 and AUDATA2 are used for 5.1 output, presenting all six channels of surround sound (Left, Center, Right, Left Surround, Right Surround and Subwoofer).

AUDATA3 can be used with AUDATA0, AUDATA1 and AUDATA2 to support 7.1 output. Alternatively AUDATA3 can be used for dual zone support. AUDATA3 is multiplexed with the XMT958 output so only one can be used at any one time.

Table 17 shows the mapping of DAO channels to actual outputs when not in a multichannel mode.

DAO_Channel	Subframe	Signal
0	Left	AUDATA0
1	Right	AUDATA0
2	Left	AUDATA1
3	Right	AUDATA1
4	Left	AUDATA2
5	Right	AUDATA2
6	Left	AUDATA3
7	Right	AUDATA3

Table 17. Output Channel Mapping

Please consult the application code user's guides to determine what modes are supported by the application code being used.

10.5.1.IEC60958 Output

The XMT958 output is shared with the AUDATA3 output so only one can be used at any one time. The XMT958 output provides a CMOS level bi phase encoded output. The XMT958 function can be internally clocked from the PLL or from an MCLK input if MCLK is 256Fs or 512Fs. All channel status information can be used when using software which supports this functionality. This output can be used for either 2 channel PCM output or compressed data output in accordance with IEC61937. To be fully IEC60958 compliant this output would need to be buffered through an RS422 device or an optocoupler as its outputs are only CMOS. Please consult software user's guide to determine if this pin is supported by the download code being used.

11. HARDWARE CONFIGURATION

After download or soft reset, and before kickstarting the application (please see the Audio Manager in the Application Messaging Section of any application code user's guide for more information on kickstarting), the host has the option of changing the default hardware configuration. Hardware configuration messages are used to physically reconfigure the hardware of the audio decoder, as in enabling or disabling address checking for the serial communication port. Hardware configuration messages are also used to initialize the data type (i.e., PCM or compressed) and format (e.g., I^2S, Left Justified, Parallel, or Serial Bursty) for digital data inputs, as well as the data format and clocking options for the digital output port.

In general, the hardware configuration can only be changed immediately after download or after soft reset. However, some applications provide the capability to change the input ports without affecting other hardware configurations after sending a special Application Restart message (please see the Audio Manager in any Application Code User's Guide to determine whether the Application Restart message is supported).

Serial digital audio data bit placement and sample alignment is fully configurable in the CS493XX including left justified, right justified, delay bits or no delay bits, variable sample word sizes, variable output channel count, and programmable output channel pin assignments and clock edge polarity to integrate with most digital audio interfaces. If a mode is needed which is not presented, please consult your sales representative as to its availability.

11.1. Address Checking

When using one of the serial communication modes, I^2C or SPI, as discussed in Section 6.1, "Serial Communication" on page 36, it is necessary to send a 7-bit address along with a read/write bit at the start of any serial transaction. ***By default, address checking is disabled in the CS493XX. See below for how to enable address checking.***

The following 4-word hex message configures the address checking circuitry of the CS493XX: It should be noted that this will allow the host to enable address checking and change the address of the device. If address checking disabled is acceptable, then these messages do not need to be sent.

0x800252

0x00FFFF

0x800152

0x**HH**0000

In the last word the following bits should replace **HH**:

Bits 23:17 - New Address to use for checking (if enabling address checking)

Bit 16 - 1 = Address checking on
0 = Address checking off

11.2. Input Data Hardware Configuration

Both data format (I^2S, Left Justified, Parallel, or Serial Bursty) and data type (compressed or PCM) are required to fully define the input port's hardware configuration. The DAI and the CDI are configured by the same group of messages since their configurations are interrelated. The naming convention of the input hardware configuration is as follows:

INPUT *A B C D*

where A, B, C and D are the parameters used to fully define the input port. The parameters are defined as follows:

A - Data Type

B - Data Format (This is a don't care for parallel modes of data delivery)

C - SCLK Polarity

D - FIFO Setup (only valid for parallel modes of data delivery)

The following tables show the different values for each parameter as well as the hex message that needs to be sent. When creating the hardware configuration message, only one hex message should be sent per parameter. It should be noted that the entire B parameter hex message must be sent, even if one of the input ports has been defined as unused by the A parameter.

A Value	Data Type	Hex Message
0 (default)	DAI - PCM CDI - Compressed	0x800210 0x3FBFC0 0x800110 0x80002C
1	DAI - PCM and Compressed CDI - Unused	0x800210 0x3FBFC0 0x800110 0xC0002C
2	DAI - Unused CDI - PCM	0x800210 0x3FBFC0 0x800110 0x800020
3	DAI - PCM CDI - Bursty Compressed (for Broadcast-based Application Codes Only)	0x800210 0x003FC0 0x800110 0x0E002C
4	DAI - Multichannel PCM *(for Post-Processing Codes that can accept 2, 4 or 6 channels on one line)* CDI - PCM	0x800210 0x3FBFC0 0x800110 0x80002C
5	DAI - PCM CDI - Multichannel PCM *(for Post-Processing Codes that can accept 2, 4 or 6 channels on one line)*	0x800210 0x3FBFC0 0x800110 0x800025
6	DAI - PCM CDI - Not Used Parallel Port - Compressed (FIFO B) *(for Broadcast-based application codes only)*	0x800210 0x003FC0 0x800110 0x0E002B
7	DAI - Not Used CDI - PCM Parallel Port - Compressed (FIFO B) *(for Broadcast-based application codes only)*	0x800210 0x003FC0 0x800110 0x0E0023

Table 18. Input Data Type Configuration (Input Parameter A)

A Value	Data Type	Hex Message
8	DAI - Not Used CDI - Not Used Parallel Port - PCM (FIFO C) and Compressed (FIFO B) with Intel or Motorola Parallel Host Control *(for Broadcast-based application codes only)*	0x800210 0x003FC0 0x800110 0x0E0013
9	DAI - Not Used CDI - Not Used Parallel Port - Compressed (FIFO B) with I2C or SPI Serial Control	0x800210 0x003FC0 0x800110 0x0E0002 0x800118 0x000800
10	DAI - Not Used CDI - Not Used Parallel Port - PCM (FIFO C) with I2C or SPI Serial Control	0x800210 0x003FC0 0x800110 0x0E0010 0x800118 0x000800

Table 18. Input Data Type Configuration (Input Parameter A) (Continued)

B Value	Data Format	Hex Message
0 (default)	PCM - I^2S 24-bit Compressed - I^2S 16-bit *(Compressed meaning any type of compressed data such as IEC61937-packed AC-3, DTS, MPEG Multichannel, AAC or MP3 elementary stream data from a DVD or IEC60958-packed elementary stream DTS data from a DTS-CD)*	0x800217 0x8080FF 0x80021A 0x8080FF 0x800117 0x011100 0x80011A 0x011900
1	PCM - Left Justified 24-bit Compressed - Left Justified 16-bit *(Compressed meaning any type of compressed data such as IEC61937-packed AC-3, DTS, MPEG Multichannel, AAC or MP3 elementary stream data from a DVD or IEC60958-packed elementary stream DTS data from a DTS-CD)*	0x800217 0x8080FF 0x80021A 0x8080FF 0x800117 0x001000 0x80011A 0x001800

Table 19. Input Data Format Configuration (Input Parameter B)

B Value	Data Format	Hex Message
2	PCM - I²S 24-bit Multichannel PCM (6 Channel) - Left Justified 24-bit PCM *(for Post-Processing Codes that can accept 6 channels on one line like THX Surround EX application code)*	0x800217 0x8080FF 0x80021A 0x8080FF 0x800117 0x0048C0 0x80011A 0x0119C0
22	PCM - I²S 24-bit Multichannel PCM (2 Channel) - Left Justified 24-bit PCM *(used only by special post-processing application codes)*	0x800217 0x8080FF 0x80021A 0x8080FF 0x800117 0x0018C0 0x80011A 0x0119C0
24	PCM - I²S 24-bit Multichannel PCM (4 Channel) - Left Justified 24-bit PCM *(used only by special post-processing application codes)*	0x800217 0x8080FF 0x80021A 0x8080FF 0x800117 0x0030C0 0x80011A 0x0119C0
3	PCM - Left Justified 24-bit Multichannel PCM (6 Channel) - Left Justified 24-bit *(for Post-Processing Codes that can accept 6 channels on one line like THX Surround EX application code)*	0x800217 0x8080FF 0x80021A 0x8080FF 0x800117 0x0048C0 0x80011A 0x0018C0
32	PCM - Left Justified 24-bit Multichannel PCM (2 Channel) - Left Justified 24-bit *(used only by special post-processing application codes)*	0x800217 0x8080FF 0x80021A 0x8080FF 0x800117 0x0018C0 0x80011A 0x0018C0
34	PCM - Left Justified 24-bit Multichannel PCM (4 Channel) - Left Justified 24-bit *(used only by special post-processing application codes)*	0x800217 0x8080FF 0x80021A 0x8080FF 0x800117 0x0030C0 0x80011A 0x0018C0

Table 19. Input Data Format Configuration (Input Parameter B) (Continued)

B Value	Data Format	Hex Message
4-6	Not Used	
7	PCM - I²S 24-bit Multichannel PCM (6 Channel) - Left Justified 20-bit *(used by standard post-processing application codes like THX Surround EX)*	0x800217 0x8080FF 0x80021A 0x8080FF 0x800117 0x003CC0 0x80011A 0x0119C0
72	PCM - I²S 24-bit Multichannel PCM (2 Channel) - Left Justified 20-bit *(used only by special post-processing application codes)*	0x800217 0x8080FF 0x80021A 0x8080FF 0x800117 0x0014C0 0x80011A 0x0119C0
74	PCM - I²S 24-bit Multichannel PCM (4 Channel) - Left Justified 20-bit *(used only by special post-processing application codes)*	0x800217 0x8080FF 0x80021A 0x8080FF 0x800117 0x0028C0 0x80011A 0x0119C0
8	PCM - Left Justified 24-bit Multichannel PCM (6 Channel) - Left Justified 20-bit *(for Post-Processing Codes that can accept 6 channels on one line like THX Surround EX application code)*	0x800217 0x8080FF 0x80021A 0x8080FF 0x800117 0x003CC0 0x80011A 0x0018C0
82	PCM - Left Justified 24-bit Multichannel PCM (2 Channel) - Left Justified 20-bit *(used only by special post-processing application codes)*	0x800217 0x8080FF 0x80021A 0x8080FF 0x800117 0x0014C0 0x80011A 0x0018C0

Table 19. Input Data Format Configuration (Input Parameter B) (Continued)

B Value	Data Format	Hex Message
84	PCM - Left Justified 24-bit	0x800217 0x8080FF
	Multichannel PCM (4 Channel) - Left Justified 20-bit *(used only by special post-processing application codes)*	0x80021A 0x8080FF 0x800117 0x0028C0 0x80011A 0x0018C0

Table 19. Input Data Format Configuration (Input Parameter B) (Continued)

C Value	SCLK Polarity (Both CDI & DAI Port)	Hex Message
0 (default)	Data Clocked in on Rising Edge	0x800217 0xFFFFDF 0x80021A 0xFFFFDF
1	Data Clocked in on Falling Edge	0x800117 0x000020 0x80011A 0x000020

Table 20. Input SCLK Polarity Configuration (Input Parameter C)

11.2.1. Input Configuration Considerations

1) 24-bit PCM input requires at least 24 SCLKS per sub-frame. The DSP always uses 24-bit resolution for PCM input. Systems having less than 24-bit resolution will not have a problem as the extra bits taken by the DSP will be under the noise floor of the input signal for left justified and I^2S formats. For compressed input, data is always taken in 16 bit word lengths.

D Value	FIFO Size & Blocksize (no default - only applicable to parallel delivery modes)	Hex Message
1	Compressed FIFO B Size - 6kbyte Blocksize - up to 2kbyte	0x800014 0x280D00
2	PCM FIFO C Size - 6kbyte Blocksize - up to 2kbyte	0x800014 0x820300

Table 21. Input FIFO Setup Configuration (Input Parameter D)

2) If the clocks to the audio ports are known to be corrupted, such as when a S/PDIF receiver goes out of lock, the DSP should undergo an application restart (if applicable), soft reset or hard reset. All three actions will result in the input FIFO being reset. Failure to do so *may* result in corrupted data being latched into the input FIFO and may result in corrupted data being heard on the outputs. This is not an issue when compressed data is being delivered, as it has sync words embedded in the stream which the DSP can lock to, but only when PCM data is being delivered. Certain application codes that are capable of processing PCM may now have a special feature called “PCM Robustness” which does alleviate the above problem, however you should still follow the above recommendation.

11.3. Output Data Hardware Configuration

The naming convention for the DAO configuration is as follows:

OUTPUT *A B C D E*

where the parameters are defined as:

A - DAO Mode (Master/Slave for LRCLK and SCLK)

B - Data Format

C - MCLK Frequency

D - SCLK Frequency

E - SCLK Polarity

The following tables show the different values for each parameter as well as the hex message that needs to be sent. When creating the hardware configuration message, only one hex message should be sent per parameter.

A Value	DAO Modes (LRCLK & SCLK)	Hex Message
0 (default)	MCLK - Slave SCLK - Slave LRCLK - Slave	0x80017F 0x400000
1	MCLK - Slave SCLK - Master LRCLK - Master	0x80027F 0xBFFFFF
2	MCLK - Master SCLK - Master LRCLK - Master	0x80027F 0xBFDFFF

Table 22. Output Clock Configuration (Parameter A)

B Value	DAO Data Format Of AUDATA0, 1, 2 (or AUDATA0 for Multichannel Modes)	Hex Message
0 (default)	I^2S 24-bit *(Configuration of AUDATA3 as S/PDIF (IEC60958) or Digital Audio in the format of I^2S or Left Justified is covered in AN162 and AN163)*	0x80027F 0xFC7FFF 0x80027C 0xF01F00 0x80027D 0xF01F00 0x80027E 0xF01F00 0x80017F 0x038000 0x80017C 0x000001 0x80017D 0x000001 0x80017E 0x000001
1	Left Justified 24-bit *(Configuration of AUDATA3 as S/PDIF (IEC60958) or Digital Audio in the format of I^2S or Left Justified is covered in AN162 and AN163)*	0x80027F 0xFC7FFF 0x80027C 0xF01F00 0x80027D 0xF01F00 0x80027E 0xF01F00 0x80017F 0x018000
2	Multichannel (6 channel) 20-bit Left Justified (SCLK must be at least 128Fs for this mode) *(Configuration of AUDATA3 as S/PDIF (IEC60958) or Digital Audio in the format of I^2S or Left Justified is covered in AN162 and AN163)*	0x80027F 0xFC7FFF 0x80027C 0xF00000 0x80017C 0x001300 0x80027D 0xF00000 0x80017D 0x001300 0x80027E 0xF00000 0x80017E 0x001300

Table 23. Output Data Format Configuration (Parameter B)

B Value	DAO Data Format Of AUDATA0, 1, 2 (or AUDATA0 for Multichannel Modes)	Hex Message
22	Multichannel (2 channel) 20-bit Left Justified (SCLK must be at least **128Fs** for this mode) *(Configuration of AUDATA3 as S/PDIF (IEC60958) or Digital Audio in the format of I²S or Left Justified is covered in AN162 and AN163)*	0x80027F 0xFC7FFF 0x80017F 0x018000 0x80027C 0xF01F00 0x80017C 0x001300
24	Multichannel (4 channel) 20-bit Left Justified (SCLK must be at least **128Fs** for this mode) *(Configuration of AUDATA3 as S/PDIF (IEC60958) or Digital Audio in the format of I²S or Left Justified is covered in AN162 and AN163)*	0x80027F 0xFC7FFF 0x80017F 0x010000 0x80027C 0xF01F00 0x80017C 0x001300
3	Multichannel (6 channel) 24-bit Left Justified (SCLK must be at least **256Fs** for this mode) *(Configuration of AUDATA3 as S/PDIF (IEC60958) or Digital Audio in the format of I²S or Left Justified is covered in AN162 and AN163)*	0x80027F 0xFC7FFF 0x80027C 0xF01F00 0x80027D 0xF01F00 0x80027E 0xF01F00
32	Multichannel (2 channel) 24-bit Left Justified (SCLK must be at least **128Fs** for this mode) *(Configuration of AUDATA3 as S/PDIF (IEC60958) or Digital Audio in the format of I²S or Left Justified is covered in AN162 and AN163)*	0x80027F 0xFC7FFF 0x80027C 0xF01F00 0x80017F 0x018000
34	Multichannel (4 channel) 24-bit Left Justified (SCLK must be at least **128Fs** for this mode) *(Configuration of AUDATA3 as S/PDIF (IEC60958) or Digital Audio in the format of I²S or Left Justified is covered in AN162 and AN163)*	0x80027F 0xFC7FFF 0x80017F 0x010000 0x80027C 0xF01F00

Table 23. Output Data Format Configuration (Parameter B) (Continued)

C Value	MCLK Frequency	Hex Message
0 (default)	256Fs	0x80027F 0xFFE7FF
1	512Fs	0x80027F 0xFFE7FF 0x80017F 0x001000
2	128Fs	0x80027F 0xFFE7FF 0x80017F 0x001800
3	384Fs (SCLK must be 64Fs in this mode and MCLK must be an input)	0x80027F 0xFFE7FF 0x80017F 0x000800

Table 24. Output MCLK Configuration (Parameter C)

D Value	SCLK Frequency	Hex Message
0 (default)	64Fs	0x80027F 0xFFF8FF 0x80017F 0x000100
1	128Fs	0x80027F 0xFFF8FF 0x80017F 0x000200
2	256Fs	0x80027F 0xFFF8FF 0x80017F 0x000300

Table 25. Output SCLK Configuration (Parameter D)

E Value	SCLK Polarity	Hex Message
0 (default)	Data Valid on Rising Edge (clocked out on falling)	0x80027F 0xF7FFFF
1	Data Valid on Falling Edge (clocked out on rising)	0x80017F 0x080000

Table 26. Output SCLK Polarity Configuration (Parameter E)

11.3.1. Output Configuration Considerations

1) All PCM output is 24-bit resolution
2) An SCLK frequency of at least 128Fs must be selected for the 20-bit multichannel (6 channel) mode.
3) An SCLK frequency of at least 128Fs must be selected for the 24-bit multichannel (4 channel) mode.
4) An SCLK frequency of at least 256Fs must be selected for the 24-bit multichannel (6 channel) mode.
5) If the clocks to the audio ports are known to be corrupted, such as when a S/PDIF receiver goes out of lock, the DSP should undergo an application restart (if applicable), soft reset or hard reset. All three actions will result in the input FIFO being reset. Failure to do so *may* result in corrupted data being latched into the input FIFO and may result in corrupted data being heard on the outputs. This is not an issue when compressed data is being delivered, as it has sync words embedded in the stream which the DSP can lock to, but only when PCM data is being delivered. Certain application codes that are capable of processing PCM may now have a special feature called "PCM Robustness" which does alleviate the above problem, however you should still follow the above recommendation.

11.4. Creating Hardware Configuration Messages

The single hardware configuration message that must be sent to the CS493XX after download or soft reset should be a concatenation of the messages in the previous sections. The complete hardware configuration message should be created by taking a message for each parameter (where the default is not acceptable) and concatenating the messages together. No messages need to be sent if the default configuration for a particular parameter is acceptable. This example can be easily expanded to fit other system requirements.

For example if the host system has the following configuration:

Address Checking: Disabled

The above configuration is default so no configuration message is required.

DAI: Left Justified
PCM and Compressed data

CDI: Not used

The above configuration corresponds to

INPUT A1 B1

which corresponds to a configuration message of:

0x800210
0x3FBFC0
0x800110
0xC0002C

0x800217
0x8080FF
0x80021A
0x8080FF
0x800117
0x001000
0x80011A
0x001800

DAO: Left Justified slave mode (LRCLK, SCLK inputs)
MCLK @ 256Fs
SCLK @ 64Fs

The above configuration corresponds to

OUTPUT A0 B1 C0 D0

which has a configuration message of:

0x80027F
0xFC7FFF
0x80027C
0xF01F00
0x80027D
0xF01F00
0x80027E
0xF01F00
0x80017F
0x018000

Concatenating the messages together gives the following hardware configuration message that should be sent after download or soft reset:

WORD#	VALUE	WORD#	VALUE
1	0x800210	12	0x001800
2	0x3FBFC0	13	0x80027F
3	0x800110	14	0xFC7FFF
4	0xC0002C	15	0x80027C
5	0x800217	16	0xF01F00
6	0x8080FF	17	0x80027D
7	0x80021A	18	0xF01F00
8	0x8080FF	19	0x80027E
9	0x800117	20	0xF01F00
10	0x001000	21	0x80017F
11	0x80011A	22	0x018000

Table 27. Example Values to be Sent to CS493XX After Download or Soft Reset

12. PIN DESCRIPTIONS

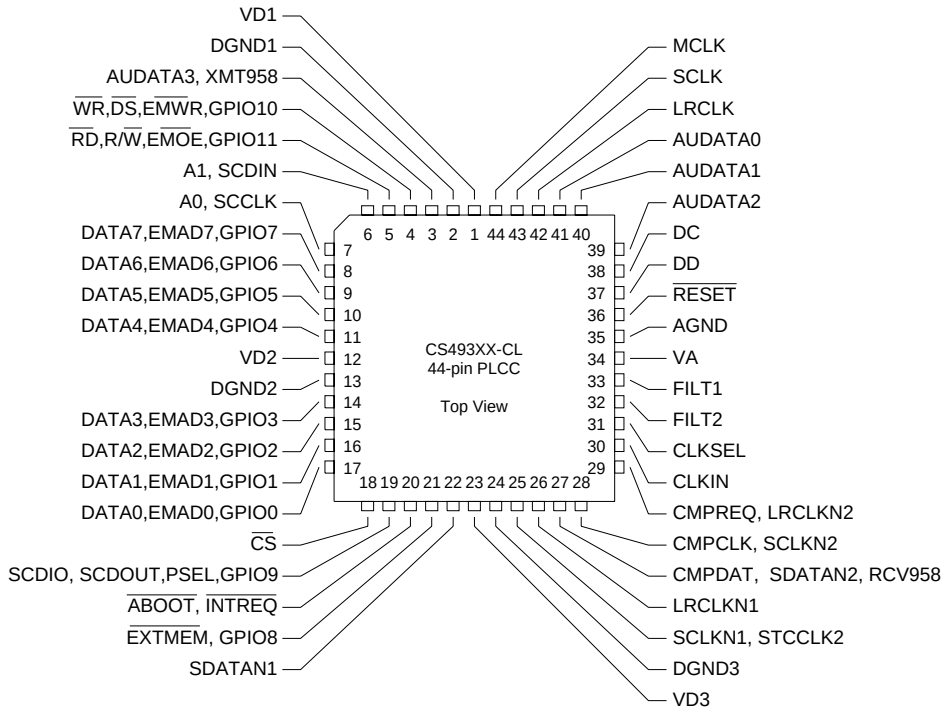

VA—Analog Positive Supply: Pin 34

Analog positive supply for clock generator. Nominally +2.5 V.

AGND—Analog Supply Ground: Pin 35

Analog ground for clock generator PLL.

VD1, VD2, VD3—Digital Positive Supply: Pins 1, 12, 23

Digital positive supplies. Nominally +2.5 V.

DGND1, DGND2, DGND3—Digital Supply Ground: Pins 2, 13, 24

Digital ground.

FILT1—Phase-Locked Loop Filter: Pin 33

Connects to an external filter for the on-chip phase-locked loop.

FILT2—Phase Locked Loop Filter: Pin 32

Connects to an external filter for the on-chip phase-locked loop.

CLKIN—Master Clock Input: Pin 30

CS493XX clock input. When in internal clock mode (CLKSEL == DGND), this input is connected to the internal PLL from which all internal clocks are derived. When in external clock mode (CLKSEL == VD), this input is connected to the DSP clock. *INPUT*

CLKSEL—DSP Clock Select: Pin 31

This pin selects the clock mode of the CS493XX. When CLKSEL is low, CLKIN is connected to the internal PLL from which all internal clocks are derived. When CLKSEL is high CLKIN is connected to the DSP clock. *INPUT*

DATA7, EMAD7, GPIO7—Pin 8
DATA6, EMAD6, GPIO6—Pin 9
DATA5, EMAD5, GPIO5—Pin 10
DATA4, EMAD4, GPIO4—Pin 11
DATA3, EMAD3, GPIO3—Pin 14
DATA2, EMAD2, GPIO2—Pin 15
DATA1, EMAD1, GPIO1—Pin 16
DATA0, EMAD0, GPIO0—Pin 17

In parallel host mode, these pins provide a bidirectional data bus. If a serial host mode is selected, these pins can provide a multiplexed address and data bus for connecting an 8-bit external memory. Otherwise, in serial host mode, these pins can act as general-purpose input or output pins that can be individually configured and controlled by the DSP.
BIDIRECTIONAL - Default: INPUT

A0, SCCLK—Host Parallel Address Bit Zero or Serial Control Port Clock: Pin 7

In parallel host mode, this pin serves as one of two address input pins used to select one of four parallel registers. In serial host mode, this pin serves as the serial control clock signal, specifically as the SPI clock input or the I^2C clock input. *INPUT*

A1, SCDIN—Host Address Bit One or SPI Serial Control Data Input: Pin 6

In parallel host mode, this pin serves as one of two address input pins used to select one of four parallel registers. In SPI serial host mode, this pin serves as the data input. *INPUT*

$\overline{\text{RD}}$, R/$\overline{\text{W}}$, $\overline{\text{EMOE}}$, GPIO11—Host Parallel Output Enable or Host Parallel R/$\overline{\text{W}}$ or External Memory Output Enable or General Purpose Input & Output Number 11: Pin 5

In Intel parallel host mode, this pin serves as the active-low data bus enable input. In Motorola parallel host mode, this pin serves as the read-high/write-low control input signal. In serial host mode, this pin can serve as the external memory active-low data-enable output signal. Also in serial host mode, this pin can serve as a general purpose input or output bit. At reset this pin acts as one of the mode select pins. It requires a 3.3k *Ohm* pull-up or pull-down.
BIDIRECTIONAL - Default: INPUT

$\overline{\text{WR}}$, $\overline{\text{DS}}$, $\overline{\text{EMWR}}$, GPIO10—Host Write Strobe or Host Data Strobe or External Memory Write Enable or General Purpose Input & Output Number 10: Pin 4

In Intel parallel host mode, this pin serves as the active-low data-write-input strobe. In Motorola parallel host mode, this pin serves as the active-low data-strobe-input signal. In serial host mode, this pin can serve as the external-memory active-low write-enable output signal. Also in serial host mode, this pin can serve as a general purpose input or output bit. At reset this pin acts as one of the mode select pins. It requires a 3.3k *Ohm* pull-up or pull-down.
BIDIRECTIONAL - Default: INPUT

$\overline{\text{CS}}$—Host Parallel Chip Select, Host Serial SPI Chip Select: Pin 18

In parallel host mode, this pin serves as the active-low chip-select input signal. In serial host SPI mode, this pin is used as the active-low chip-select input signal. *INPUT*

$\overline{\text{RESET}}$—Master Reset Input: Pin 36

Asynchronous active-low master reset input. Reset should be low at power-up to initialize the CS493XX and to guarantee that the device is not active during initial power-on stabilization periods. At the rising edge of reset the host interface mode is selected contingent on the state of the RD, WR and PSEL pins. Additionally, an autoboot sequence can be initiated if a serial control mode is selected and $\overline{\text{ABOOT}}$ is held low. If reset is low all bidirectional pins are high impedance inputs. *INPUT*

SCDIO, SCDOUT, PSEL, GPIO9—Serial Control Port Data Input and Output, Parallel Port Type Select: Pin 19

In I^2C mode, this pin serves as the open-drain bidirectional data pin. In SPI mode this pin serves as the data output pin. In parallel host mode, this pin is sampled at the rising edge of RESET to configure the parallel host mode as an Intel type bus or as a Motorola type bus. In parallel host mode, after the bus mode has been selected, the pin can function as a general-purpose input or output pin. At reset this pin acts as one of the mode select pins. It requires a 3.3k *Ohm* pull-up or pull-down. *BIDIRECTIONAL - Default: INPUT*
In I^2C mode this pin is an OPEN DRAIN I/O and requires a 3.3k Pull-Up

$\overline{\text{EXTMEM}}$, GPIO8—External Memory Chip Select or General Purpose Input & Output Number 8: Pin 21

In serial control port mode, this pin can serve as an output to provide the chip-select for an external byte-wide ROM. In parallel and serial host mode, this pin can also function as a general-purpose input or output pin. *BIDIRECTIONAL - Default: INPUT*

$\overline{\text{INTREQ}}$, $\overline{\text{ABOOT}}$—Control Port Interrupt Request, Automatic Boot Enable: Pin 20

Open-drain interrupt-request output. This pin is driven low to indicate that the DSP has outgoing control data and should be serviced by the host. Also in serial host mode, this signal initiates an automatic boot cycle from external memory if it is held low through the rising edge of reset. *OPEN DRAIN I/O - Requires 3.3k Ohm Pull-Up*

AUDATA2—Digital Audio Output 2: Pin 39

PCM multi-format digital-audio data output, capable of two-channel 20-bit output. This PCM output defaults to DGND as output until enabled by the DSP software. *OUTPUT*

AUDATA1—Digital Audio Output 1: Pin 40

PCM multi-format digital-audio data output, capable of two-channel 20-bit output. This PCM output defaults to DGND as output until enabled by the DSP software. *OUTPUT*

AUDATA0—Digital Audio Output 0: Pin 41

PCM multi-format digital-audio data output, capable of two-, four-, or six-channel 20-bit output. This PCM output defaults to DGND as output until enabled by the DSP software. *OUTPUT*

MCLK—Audio Master Clock: Pin 44

Bidirectional master audio clock. MCLK can be an output from the CS493XX that provides an oversampled audio-output clock at either 128 Fs, 256 Fs, or 512 Fs. MCLK can be an input at 128 Fs, 256 Fs, 384 Fs, or 512 Fs. MCLK is used to derive SCLK and LRCLK when SCLK and LRCLK are driven by the CS493XX. *BIDIRECTIONAL - Default: INPUT*

SCLK—Audio Output Bit Clock: Pin 43

Bidirectional digital-audio output bit clock. SCLK can be an output that is derived from MCLK to provide 32 Fs, 64 Fs, 128 Fs, 256 Fs, or 512 Fs, depending on the MCLK rate and the digital-output configuration. SCLK can also be an input and must be at least 48Fs or greater. As an input, SCLK is independent of MCLK. *BIDIRECTIONAL - Default: INPUT*

LRCLK—Audio Output Sample Rate Clock: Pin 42

Bidirectional digital-audio output-sample-rate clock. LRCLK can be an output that is divided from MCLK to provide the output sample rate depending on the output configuration. LRCLK can also be an input. As an input LRCLK is independent of MCLK.
BIDIRECTIONAL - Default: INPUT

AUDATA3,XMT958—SPDIF Transmitter Output, Digital Audio Output 3: Pin 3

CMOS level output that contains a biphase-mark encoded (S/PDIF) or I^2S or Left Justified digital audio data which is capable of carrying two channels of PCM digital audio or an IEC61937 compressed-data interface.

Note: Outputting of IEC61937 is only available for certain broadcast-based application codes which run on the CS4931X family or CS49330 device.

This output typically connects to the input of an RS-422 transmitter or to the input of an optical transmitter. *OUTPUT*

SCLKN1, STCCLK2—PCM Audio Input Bit Clock: Pin 25

Bidirectional digital-audio bit clock that is an output in master mode and an input in slave mode. In slave mode, SCLKN1 operates asynchronously from all other CS493XX clocks. In master mode, SCLKN1 is derived from the CS493XX internal clock generator. In either master or slave mode, the active edge of SCLKN1 can be programmed by the DSP. For applications supporting PES layer synchronization this pin can be used as STCCLK2, which provides a path to the internal STC 33 bit counter. *BIDIRECTIONAL - Default: INPUT*

LRCLKN1—PCM Audio Input Sample Rate Clock: Pin 26

Bidirectional digital-audio frame clock that is an output in master mode and an input in slave mode. LRCLKN1 typically is run at the sampling frequency. In slave mode, LRCLKN1 operates asynchronously from all other CS493XX clocks. In master mode, LRCLKN1 is derived from the CS493XX internal clock generator. In either master or slave mode, the polarity of LRCLKN1 for a particular subframe can be programmed by the DSP.
BIDIRECTIONAL - Default: INPUT

SDATAN1—PCM Audio Data Input Number One: Pin 22

Digital-audio data input that can accept from one to six channels of compressed or PCM data. SDATAN1 can be sampled with either edge of SCLKN1, depending on how SCLKN1 has been configured. *INPUT*

CMPCLK, SCLKN2—PCM Audio Input Bit Clock: Pin 28

Bidirectional digital-audio bit clock that is an output in master mode and an input in slave mode. In slave mode, SCLKN2 operates asynchronously from all other CS493XX clocks. In master mode, SCLKN2 is derived from the CS493XX internal clock generator. In either master or slave mode, the active edge of SCLKN2 can be programmed by the DSP. If the CDI is configured for bursty delivery, CMPCLK is an input used to sample CMPDAT. *BIDIRECTIONAL - Default: INPUT*

CMPREQ, LRCLKN2—PCM Audio Input Sample Rate Clock: Pin 29

When the CDI is configured as a digital audio input, this pin serves as a bidirectional digital-audio frame clock that is an output in master mode and an input in slave mode. LRCLKN2 typically is run at the sampling frequency. In slave mode, LRCLKN2 operates asynchronously from all other CS493XX clocks. In master mode, LRCLKN2 is derived from the CS493XX internal clock generator. In either master or slave mode, the polarity of LRCLKN2 for a particular subframe can be programmed by the DSP. When the CDI is configured for bursty delivery, or parallel audio data delivery is being used, CMPREQ is an output which serves as an internal FIFO monitor. CMPREQ is an active low signal that indicates when another block of data can be accepted. *BIDIRECTIONAL - Default: INPUT*

CMPDAT, SDATAN2—PCM Audio Data Input Number Two: Pin 27

Digital-audio data input that can accept from one to six channels of compressed or PCM data. SDATAN2 can be sampled with either edge of SCLKN2, depending on how SCLKN2 has been configured. Similarly CMPDAT is the compressed data input pin when the CDI is configured for bursty delivery. When in this mode, the CS493XX internal PLL is driven by the clock recovered from the incoming data stream. *INPUT*

DC—Reserved: Pin 38

This pin is reserved and should be pulled up with an external 4.7k resistor.

DD—Reserved: Pin 37

This pin is reserved and should be pulled up with an external 4.7k resistor.

13. ORDERING INFORMATION

Base Part Number (6th digit = ROM ID)	Grades and Temperature Ranges			Package	Pb-free Option "Z" Suffix
	C (Consumer) 0° to 70°C	I (Industrial) -40° to 85°C	D (Automotive) -40° to 85°C		
CS493122	CS493122-CL			44-pin PLCC	CS493122-CLZ
CS493292	CS493292-CL	CS493292-IL			CS493292-CLZ
CS493302	CS493302-CL	CS493302-IL			CS493302-CLZ *or* -ILZ
CS493253	CS493253-CL				CS493253-CLZ
CS493263	CS493263-CL	CS493263-IL	CS493263-DL (Pb-free Only)		CS493263-CLZ *or* -ILZ *or* -DLZ
CS493254	CS493254-CL	CS493254-IL			CS493254-CLZ
CS493264	CS493264-CL	CS493264-IL			CS493264-CLZ
CS493005	CS493005-CL				CS493005-CLZ
CS493105	CS493105-CL				CS493105-CLZ
CS493115	CS493115-CL				CS493115-CLZ
CS493295	CS493295-CL				CS493295-CLZ

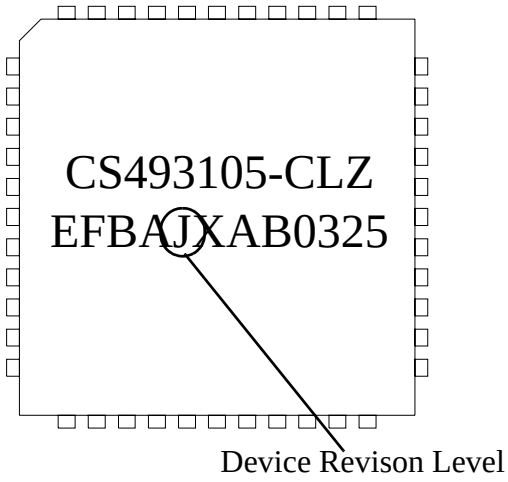

12-Character Pack Mark

14. PACKAGE DIMENSIONS

44L PLCC PACKAGE DRAWING

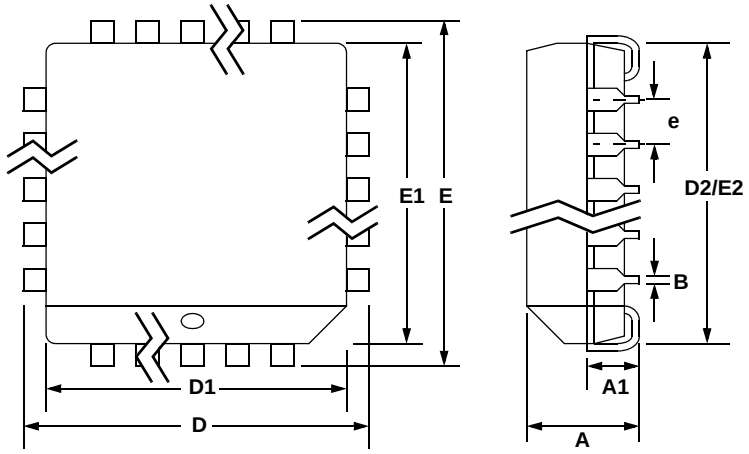

	INCHES		MILLIMETERS	
DIM	MIN	MAX	MIN	MAX
A	0.165	0.180	4.191	4.572
A1	0.090	0.120	2.286	3.048
B	0.013	0.021	.330	0.533
D	0.685	0.695	17.399	17.653
D1	0.650	0.656	16.510	16.662
D2	0.590	0.630	14.986	16.002
E	0.685	0.695	17.399	17.653
E1	0.650	0.656	16.510	16.662
E2	0.590	0.630	14.986	16.002
e	0.040	0.060	1.016	1.524

15. DOCUMENT REVISIONS

Revision	Date	Changes
PP4	Mar 2003	Last preliminary release.
F1	Feb 2004	Initial final release. 1. p.73, Corrected Hex Message *"B" Value 74* from: *0x0014C0* to *0x0028C0* 2. p. 84, Added ROM ID-5 devices and a note on ordering lead-free devices to "Ordering Information". Also added a description of the characters that comprise the part number. 3. Removed ambient temperature condition (T_A=25°C) from Spec Tables. 4. Changed Note 6. in Table 1.9 (p.12) and Table 1.10 (p.14) from: *With a 4.7k Ohm pull-up resistor this value is typically 215ns. As this pin is open drain adjusting the pull up value will affect the rise time.* to *With a 3.3k Ohm pull-up resistor this value is typically 260ns. As this pin is open drain adjusting the pull up value will affect the rise time.* 5. Added a section "2.1. - CS493XX Document Strategy" (p.21) 6. p.10, Changed $\overline{CS}$ to $\overline{DS}$ for T_{mdd} 7. p.10, Deleted the word "low" from the Parameter column for T_{mdis} 8. p. 84 Added two diagrams that indicate how to determine the "Device Revision Level" from the 10-character or the 12-character Pack Mark written on the top of chip, below the device number. 9. p. 80, Made reference to the use of pin 4 & pin 5 as mode select pin at reset. Also added that both these pins require 3.3 k Ohm pull-up or pull-down 10. p. 81, Changed pin 19 & pin 20 pull-up/down resistor requirement to 3.3 k Ohm. Also mention of pin 19 usage as a mode select pin during reset.
F2	Apr 2004	Changed "All bidirectional pins high-Z after $\overline{RESET}$ low" (T_{rst2z}) parameter from 50ns Max to 100ns Max. See page 8.
F3	APR 2005	Updated Device Ordering Information to include Pb-free devices.
F4	JUN 2005	Corrected error in mechanical information - "e", pin spacing from .102 mm to 1.016 mm
F5	NOV 2005	Updated CLKIN high/low times to 14 ns. Added "Delay from falling edge of CMPREQ to CMPCLK rising edge" parameter to Serial Bursty Data Input timing (0 ns). Updated same timing diagram to include T_{reqclk} parameter.
F6	JAN 2006	AddedThermal Data section (section 1.3)
F7	APR 2006	Added Note 3 and Note 4 to Section 1.3, "Thermal Data" on page 7. Corrected copyright date.