CS42418

110 dB, 192 kHz 8-Ch Codec with PLL

Features

- Eight 24-bit D/A, two 24-bit A/D Converters
- 110 dB DAC / 114 dB ADC Dynamic Range
- -100 dB THD+N
- System Sampling Rates up to 192 kHz
- Integrated Low-Jitter PLL for Increased System Jitter Tolerance
- PLL Clock or System Clock Selection
- 7 Configurable General-Purpose Outputs
- ADC High-Pass Filter for DC Offset Calibration
- Expandable ADC Channels and One-Line Mode Support
- Digital Output Volume Control with Soft Ramp
- Digital +/-15 dB Input Gain Adjust for ADC
- Differential Analog Architecture
- Supports Logic Levels between 1.8 V and 5 V

General Description

The CS42418 codec provides two analog-to-digital and eight digital-to-analog delta-sigma converters, as well as an integrated PLL.

The CS42418 integrated PLL provides a low-jitter system clock. The internal stereo ADC is capable of independent channel gain control for single-ended or differential analog inputs. All eight channels of DAC provide digital volume control and differential analog outputs. The general-purpose outputs may be driven high or low, or mapped to a variety of DAC mute controls or ADC overflow indicators.

The CS42418 is ideal for audio systems requiring wide dynamic range, negligible distortion and low noise, such as A/V receivers, DVD receivers, digital speaker and automotive audio systems.

The CS42418 is available in a 64-pin LQFP package in both Commercial (-10° to 70° C) and Automotive (-40° to 85° C) grades. The CDB42428 Customer Demonstration board is also available for device evaluation. Refer to "Ordering Information" on page 71.

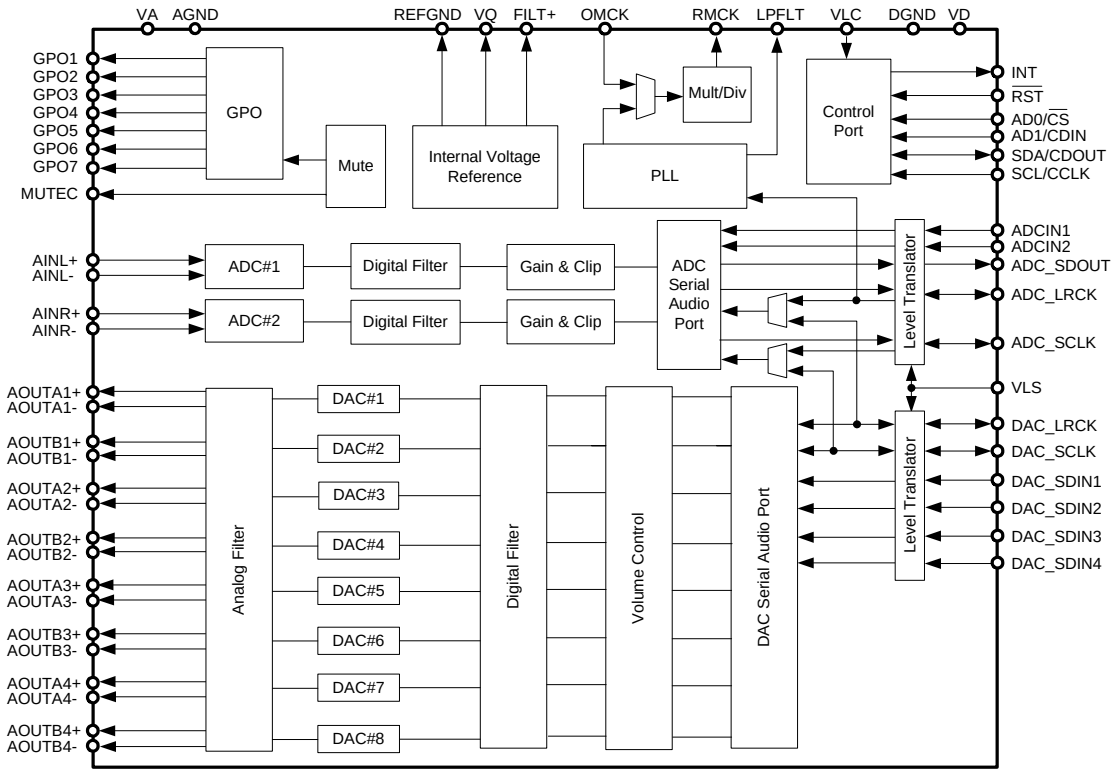

Copyright © Cirrus Logic, Inc. 2005
(All Rights Reserved)

TABLE OF CONTENTS

1. CHARACTERISTICS AND SPECIFICATIONS 6
SPECIFIED OPERATING CONDITIONS 6
ABSOLUTE MAXIMUM RATINGS 6
ANALOG INPUT CHARACTERISTICS 7
A/D DIGITAL FILTER CHARACTERISTICS 8
ANALOG OUTPUT CHARACTERISTICS 9
D/A DIGITAL FILTER CHARACTERISTICS 10
SWITCHING CHARACTERISTICS 11
SWITCHING CHARACTERISTICS - CONTROL PORT - I²C FORMAT 12
SWITCHING CHARACTERISTICS - CONTROL PORT - SPI™ FORMAT 13
DC ELECTRICAL CHARACTERISTICS 14
DIGITAL INTERFACE CHARACTERISTICS 15
2. PIN DESCRIPTIONS 16
3. TYPICAL CONNECTION DIAGRAMS 18
4. APPLICATIONS 20
4.1 Overview 20
4.2 Analog Inputs 20
4.2.1 Line-Level Inputs 20
4.2.2 High-Pass Filter and DC Offset Calibration 21
4.3 Analog Outputs 21
4.3.1 Line-Level Outputs and Filtering 21
4.3.2 Interpolation Filter 21
4.3.3 Digital Volume and Mute Control 22
4.3.4 ATAPI Specification 22
4.4 Clock Generation 23
4.4.1 PLL and Jitter Attenuation 23
4.4.2 OMCK System Clock Mode 24
4.4.3 Master Mode 24
4.4.4 Slave Mode 24
4.5 Digital Interfaces 25
4.5.1 Serial Audio Interface Signals 25
4.5.2 Serial Audio Interface Formats 27
4.5.3 ADCIN1/ADCIN2 Serial Data Format 30
4.5.4 One-Line Mode (OLM) Configurations 31
4.5.4.1 OLM Config #1 31
4.5.4.2 OLM Config #2 32
4.5.4.3 OLM Config #3 33
4.5.4.4 OLM Config #4 34
4.6 Control Port Description and Timing 35
4.6.1 SPI Mode 35
4.6.2 I²C Mode 36
4.7 Interrupts 37
4.8 Reset and Power-Up 37
4.9 Power Supply, Grounding, and PCB Layout 38
5. REGISTER QUICK REFERENCE 39
6. REGISTER DESCRIPTION 42
6.1 Memory Address Pointer (MAP) 42
6.2 Chip I.D. and Revision Register (address 01h) (Read Only) 42
6.3 Power Control (address 02h) 43
6.4 Functional Mode (address 03h) 43
6.5 Interface Formats (address 04h) 45
6.6 Misc Control (address 05h) 46

6.7 Clock Control (address 06h) 48
6.8 OMCK/PLL_CLK Ratio (address 07h) (Read Only) 49
6.9 Clock Status (address 08h) (Read Only) 50
6.10 Volume Transition Control (address 0Dh) 51
6.11 Channel Mute (address 0Eh) 52
6.12 Volume Control (addresses 0Fh, 10h, 11h, 12h, 13h, 14h, 15h, 16h) 53
6.13 Channel Invert (address 17h) 53
6.14 Mixing Control Pair 1 (Channels A1 & B1)(address 18h)
Mixing Control Pair 2 (Channels A2 & B2)(address 19h)
Mixing Control Pair 3 (Channels A3 & B3)(address 1Ah)
Mixing Control Pair 4 (Channels A4 & B4)(address 1Bh) 53
6.15 ADC Left Channel Gain (address 1Ch) 55
6.16 ADC Right Channel Gain (address 1Dh) 55
6.17 Interrupt Control (address 1Eh) 55
6.18 Interrupt Status (address 20h) (Read Only) 56
6.19 Interrupt Mask (address 21h) 57
6.20 Interrupt Mode MSB (address 22h)
Interrupt Mode LSB (address 23h) 57
6.21 Mutec Pin Control (address 28h) 57
6.22 General-Purpose Pin Control (addresses 29h to 2Fh) 58
7. PARAMETER DEFINITIONS 60
8. APPENDIX A: EXTERNAL FILTERS 61
8.1 ADC Input Filter 61
8.2 DAC Output Filter 61
9. APPENDIX B: PLL FILTER 62
9.1 External Filter Components 62
9.1.1 General 62
9.1.2 Capacitor Selection 62
9.1.3 Circuit Board Layout 63
10. APPENDIX C: ADC FILTER PLOTS 64
11. APPENDIX D: DAC FILTER PLOTS 66
12. PACKAGE DIMENSIONS 70
THERMAL CHARACTERISTICS 70
13. ORDERING INFORMATION 71
14. REFERENCES 71
15. REVISION HISTORY 72

LIST OF FIGURES

Figure 1.Serial Audio Port Master Mode Timing 11
Figure 2.Serial Audio Port Slave Mode Timing 11
Figure 3.Control Port Timing - I²C Format 12
Figure 4.Control Port Timing - SPI Format 13
Figure 5.Typical Connection Diagram 18
Figure 6.Typical Connection Diagram using the PLL 19
Figure 7.Full-Scale Analog Input 20
Figure 8.Full-Scale Output 21
Figure 9.ATAPI Block Diagram (x = channel pair 1, 2, 3, 4) 22
Figure 10.Clock Generation 23
Figure 11.Right-Justified Serial Audio Formats 27
Figure 12.I²S Serial Audio Formats 28
Figure 13.Left-Justified Serial Audio Formats 28
Figure 14.One Line Mode #1 Serial Audio Format 29
Figure 15.One Line Mode #2 Serial Audio Format 29

Figure 16.ADCIN1/ADCIN2 Serial Audio Format 30
Figure 17.OLM Configuration #1 31
Figure 18.OLM Configuration #2 32
Figure 19.OLM Configuration #3 33
Figure 20.OLM Configuration #4 34
Figure 21.Control Port Timing in SPI Mode 35
Figure 22.Control Port Timing, I²C Write 36
Figure 23.Control Port Timing, I²C Read 36
Figure 24.Recommended Analog Input Buffer 61
Figure 25.Recommended Analog Output Buffer 61
Figure 26.Recommended Layout Example 63
Figure 27.Single-Speed Mode Stopband Rejection 64
Figure 28.Single-Speed Mode Transition Band 64
Figure 29.Single-Speed Mode Transition Band (Detail) 64
Figure 30.Single-Speed Mode Passband Ripple 64
Figure 31.Double-Speed Mode Stopband Rejection 64
Figure 32.Double-Speed Mode Transition Band 64
Figure 33.Double-Speed Mode Transition Band (Detail) 65
Figure 34.Double-Speed Mode Passband Ripple 65
Figure 35.Quad-Speed Mode Stopband Rejection 65
Figure 36.Quad-Speed Mode Transition Band 65
Figure 37.Quad-Speed Mode Transition Band (Detail) 65
Figure 38.Quad-Speed Mode Passband Ripple 65
Figure 39.Single-Speed (fast) Stopband Rejection 66
Figure 40.Single-Speed (fast) Transition Band 66
Figure 41.Single-Speed (fast) Transition Band (detail) 66
Figure 42.Single-Speed (fast) Passband Ripple 66
Figure 43.Single-Speed (slow) Stopband Rejection 66
Figure 44.Single-Speed (slow) Transition Band 66
Figure 45.Single-Speed (slow) Transition Band (detail) 67
Figure 46.Single-Speed (slow) Passband Ripple 67
Figure 47.Double-Speed (fast) Stopband Rejection 67
Figure 48.Double-Speed (fast) Transition Band 67
Figure 49.Double-Speed (fast) Transition Band (detail) 67
Figure 50.Double-Speed (fast) Passband Ripple 67
Figure 51.Double-Speed (slow) Stopband Rejection 68
Figure 52.Double-Speed (slow) Transition Band 68
Figure 53.Double-Speed (slow) Transition Band (detail) 68
Figure 54.Double-Speed (slow) Passband Ripple 68
Figure 55.Quad-Speed (fast) Stopband Rejection 68
Figure 56.Quad-Speed (fast) Transition Band 68
Figure 57.Quad-Speed (fast) Transition Band (detail) 69
Figure 58.Quad-Speed (fast) Passband Ripple 69
Figure 59.Quad-Speed (slow) Stopband Rejection 69
Figure 60.Quad-Speed (slow) Transition Band 69
Figure 61.Quad-Speed (slow) Transition Band (detail) 69
Figure 62.Quad-Speed (slow) Passband Ripple 69

LIST OF TABLES

Table 1. Common OMCK Clock Frequencies 24
Table 2. Common PLL Output Clock Frequencies 24
Table 3. Slave Mode Clock Ratios 25
Table 4. Serial Audio Port Channel Allocations 26
Table 5. DAC De-Emphasis 44
Table 6. Digital Interface Formats 45
Table 7. ADC One-Line Mode 45
Table 8. DAC One-Line Mode 45
Table 9. RMCK Divider Settings 48
Table 10. OMCK Frequency Settings 48
Table 11. Master Clock Source Select 49
Table 12. PLL Clock Frequency Detection 50
Table 13. Example Digital Volume Settings 53
Table 14. ATAPI Decode 54
Table 15. Example ADC Input Gain Settings 55
Table 16. PLL External Component Values 62

1. CHARACTERISTICS AND SPECIFICATIONS

(All Min/Max characteristics and specifications are guaranteed over the Specified Operating Conditions. Typical performance characteristics and specifications are derived from measurements taken at nominal supply voltages and T_A = 25° C.)

SPECIFIED OPERATING CONDITIONS

(AGND=DGND=0, all voltages with respect to ground; OMCK=12.288 MHz; Master Mode)

Parameter		Symbol	Min	Typ	Max	Units
DC Power Supply	Analog	VA	4.75	5.0	5.25	V
	Digital	VD	3.13	3.3	5.25	V
	Serial Port Interface	VLS	1.8	5.0	5.25	V
	Control Port Interface	VLC	1.8	5.0	5.25	V
Ambient Operating Temperature (power applied)	CS42418-CQZ	T_A	-10	-	+70	°C
	CS42418-DQZ		-40	-	+85	°C

ABSOLUTE MAXIMUM RATINGS

(AGND = DGND = 0 V; all voltages with respect to ground.)

Parameters		Symbol	Min	Max	Units
DC Power Supply	Analog	VA	-0.3	6.0	V
	Digital	VD	-0.3	6.0	V
	Serial Port Interface	VLS	-0.3	6.0	V
	Control Port Interface	VLC	-0.3	6.0	V
Input Current	(Note 1)	I_{in}	-	±10	mA
Analog Input Voltage	(Note 2)	V_{IN}	AGND-0.7	VA+0.7	V
Digital Input Voltage	Serial Port Interface	V_{IND-S}	-0.3	VLS+ 0.4	V
(Note 2)	Control Port Interface	V_{IND-C}	-0.3	VLC+ 0.4	V
Ambient Operating Temperature(power applied)					
	CS42418-CQZ	T_A	-20	+85	°C
	CS42418-DQZ	T_A	-50	+95	°C
Storage Temperature		T_{stg}	-65	+150	°C

WARNING: Operation at or beyond these limits may result in permanent damage to the device. Normal operation is not guaranteed at these extremes.

Notes:

1. Any pin except supplies. Transient currents of up to ±100 mA on the analog input pins will not cause SCR latch-up.
2. The maximum over/under voltage is limited by the input current.

ANALOG INPUT CHARACTERISTICS

(T_A = 25° C; VA = 5 V, VD = 3.3 V, Logic “0” = DGND =AGND = 0 V; Logic “1” = VLS = VLC = 5 V; Measurement Bandwidth is 10 Hz to 20 kHz unless otherwise specified. Full-scale input sine wave, 997 Hz.; PDN_PLL = 1; OMCK = 12.288 MHz; Single-Speed Mode DAC_SCLK = 3.072 MHz; Double-Speed Mode DAC_SCLK = 6.144 MHz; Quad-Speed Mode DAC_SCLK = 12.288 MHz.)

Parameter	Symbol	CS42418-CQZ Min	CS42418-CQZ Typ	CS42418-CQZ Max	CS42418-DQZ Min	CS42418-DQZ Typ	CS42418-DQZ Max	Unit
Single-Speed Mode (Fs=48 kHz)								
Dynamic Range A-weighted		108	114	-	106	114	-	dB
unweighted		105	111	-	103	111	-	dB
Total Harmonic Distortion + Noise								
(Note 3) -1 dB	THD+N	-	-100	-94	-	-100	-92	dB
-20 dB		-	-91	-	-	-91	-	dB
-60 dB		-	-51	-	-	-51	-	dB
Double-Speed Mode (Fs=96 kHz)								
Dynamic Range A-weighted		108	114	-	106	114	-	dB
unweighted		105	111	-	103	111	-	dB
40 kHz bandwidth unweighted		-	108	-	-	108	-	dB
Total Harmonic Distortion + Noise								
(Note 3) -1 dB		-	-100	-94	-	-100	-92	dB
-20 dB	THD+N	-	-91	-	-	-91	-	dB
-60 dB		-	-51	-	-	-51	-	dB
40 kHz bandwidth -1 dB		-	-97	-	-	-97	-	dB
Quad-Speed Mode (Fs=192 kHz)								
Dynamic Range A-weighted		108	114	-	106	114	-	dB
unweighted		105	111	-	103	111	-	dB
40 kHz bandwidth unweighted		-	108	-	-	108	-	dB
Total Harmonic Distortion+ Noise								
(Note 3) -1 dB		-	-100	-94	-	-100	-92	dB
-20 dB	THD+N	-	-91	-	-	-91	-	dB
-60 dB		-	-51	-	-	-51	-	dB
40 kHz bandwidth -1 dB		-	-97	-	-	-97	-	dB
Dynamic Performance for All Modes								
Interchannel Isolation		-	110	-	-	110	-	dB
Interchannel Phase Deviation		-	0.0001	-	-	0.0001	-	Degree
DC Accuracy								
Interchannel Gain Mismatch		-	0.1	-	-	0.1	-	dB
Gain Drift		-	+/-100	-	-	+/-100	-	ppm/°C
Offset Error HPF_FREEZE disabled		-	0	-	-	0	-	LSB
HPF_FREEZE enabled		-	100	-	-	100	-	LSB
Analog Input								
Full-scale Differential Input Voltage		1.05 VA	1.10 VA	1.16 VA	0.99 VA	1.10 VA	1.21 VA	Vpp
Input Impedance (Differential) (Note 4)		17	-	-	17	-	-	kΩ
Common Mode Rejection Ratio	CMRR	-	82	-	-	82	-	dB

Notes:

3. Referred to the typical full-scale voltage.
4. Measured between AIN+ and AIN-

A/D DIGITAL FILTER CHARACTERISTICS

Parameter			Symbol	Min	Typ	Max	Unit
Single-Speed Mode (2 to 50 kHz sample rates)							
Passband	(-0.1 dB)	(Note 5)		0	-	0.47	Fs
Passband Ripple				-	-	±0.035	dB
Stopband		(Note 5)		0.58	-	-	Fs
Stopband Attenuation				-95	-	-	dB
Total Group Delay (Fs = Output Sample Rate)			t_{gd}	-	12/Fs	-	s
Group Delay Variation vs. Frequency			Δt_{gd}	-	-	0.0	µs
Double-Speed Mode (50 to 100 kHz sample rates)							
Passband	(-0.1 dB)	(Note 5)		0	-	0.45	Fs
Passband Ripple				-	-	±0.035	dB
Stopband		(Note 5)		0.68	-	-	Fs
Stopband Attenuation				-92	-	-	dB
Total Group Delay (Fs = Output Sample Rate)			t_{gd}	-	9/Fs	-	s
Group Delay Variation vs. Frequency			Δt_{gd}	-	-	0.0	µs
Quad-Speed Mode (100 to 192 kHz sample rates)							
Passband	(-0.1 dB)	(Note 5)		0	-	0.24	Fs
Passband Ripple				-	-	±0.035	dB
Stopband		(Note 5)		0.78	-	-	Fs
Stopband Attenuation				-97	-	-	dB
Total Group Delay (Fs = Output Sample Rate)			t_{gd}	-	5/Fs	-	s
Group Delay Variation vs. Frequency			Δt_{gd}	-	-	0.0	µs
High-Pass Filter Characteristics							
Frequency Response	-3.0 dB -0.13 dB	(Note 6)		-	1 20	- -	Hz Hz
Phase Deviation	@ 20 Hz	(Note 6)		-	10	-	Deg
Passband Ripple				-	-	0	dB
Filter Setting Time				-	10^5/Fs	-	s

Notes:

5. The filter frequency response scales precisely with Fs.
6. Response shown is for Fs equal to 48 kHz. Filter characteristics scale with Fs.

ANALOG OUTPUT CHARACTERISTICS

(T_A = 25° C; VA = 5 V, VD = 3.3 V, Logic “0” = DGND =AGND = 0 V; Logic “1” = VLS = VLC = 5V; Measurement Bandwidth 10 Hz to 20 kHz unless otherwise specified.; Full-scale output 997 Hz sine wave, Test load R_L = 3 kΩ, C_L = 30 pF; PDN_PLL = 1; OMCK = 12.288 MHz; Single-Speed Mode, DAC_SCLK = 3.072 MHz; Double-Speed Mode, DAC_SCLK = 6.144 MHz; Quad-Speed Mode, DAC_SCLK = 12.288 MHz.)

Parameter	Symbol	CS42418-CQZ Min	CS42418-CQZ Typ	CS42418-CQZ Max	CS42418-DQZ Min	CS42418-DQZ Typ	CS42418-DQZ Max	Unit
Dynamic performance for all modes								
Dynamic Range (Note 7)								
24-bit A-Weighted		104	110	-	102	110	-	dB
unweighted		101	107	-	99	107	-	dB
16-bit A-Weighted		-	97	-	-	97	-	dB
(Note 8) unweighted		-	94	-	-	94	-	dB
Total Harmonic Distortion + Noise								
24-bit 0 dB		-	-100	-94	-	-100	-92	dB
-20 dB		-	-91	-	-	-91	-	dB
-60 dB	THD+N	-	-51	-	-	-51	-	dB
16-bit 0 dB		-	-94	-	-	-94	-	dB
(Note 8) -20 dB		-	-74	-	-	-74	-	dB
-60 dB		-	-34		-	-34	-	dB
Idle Channel Noise/Signal-to-Noise Ratio (A-Weighted)		-	110	-	-	110	-	dB
Interchannel Isolation (1 kHz)		-	90	-	-	90	-	dB
Analog Output Characteristics for all modes								
Unloaded Full-Scale Differential Output Voltage	V_{FS}	.89 VA	.94 VA	.99 VA	.84 VA	.94 VA	1.04 VA	Vpp
Interchannel Gain Mismatch		-	0.1	-	-	0.1	-	dB
Gain Drift		-	300	-	-	300	-	ppm/°C
Output Impedance	Z_{OUT}	-	150	-	-	150	-	Ω
AC-Load Resistance	R_L	3	-	-	3	-	-	kΩ
Load Capacitance	C_L	-	-	30	-	-	30	pF

Notes:

7. One-half LSB of triangular PDF dither is added to data.
8. Performance limited by 16-bit quantization noise.

D/A DIGITAL FILTER CHARACTERISTICS

Parameter		Fast Roll-Off Min	Fast Roll-Off Typ	Fast Roll-Off Max	Slow Roll-Off Min	Slow Roll-Off Typ	Slow Roll-Off Max	Unit
Combined Digital and On-chip Analog Filter Response - Single-Speed Mode - 48 kHz								
Passband (Note 9)	to -0.01 dB corner	0	-	0.4535	0	-	0.4166	Fs
	to -3 dB corner	0	-	0.4998	0	-	0.4998	Fs
Frequency Response 10 Hz to 20 kHz		-0.01	-	+0.01	-0.01	-	+0.01	dB
StopBand		0.5465	-	-	0.5834	-	-	Fs
StopBand Attenuation	(Note 10)	90	-	-	64	-	-	dB
Group Delay		-	12/Fs	-	-	6.5/Fs	-	s
Passband Group Delay Deviation	0 - 20 kHz	-	-	±0.41/Fs		-	±0.14/Fs	s
De-emphasis Error (Note 11)	Fs = 32 kHz	-	-	±0.23	-	-	±0.23	dB
(Relative to 1 kHz)	Fs = 44.1 kHz	-	-	±0.14	-	-	±0.14	dB
	Fs = 48 kHz	-	-	±0.09	-	-	±0.09	dB
Combined Digital and On-chip Analog Filter Response - Double-Speed Mode - 96 kHz								
Passband (Note 9)	to -0.01 dB corner	0	-	0.4166	0	-	0.2083	Fs
	to -3 dB corner	0	-	0.4998	0	-	0.4998	Fs
Frequency Response 10 Hz to 20 kHz		-0.01	-	0.01	-0.01	-	0.01	dB
StopBand		0.5834	-	-	0.7917	-	-	Fs
StopBand Attenuation	(Note 10)	80	-	-	70	-	-	dB
Group Delay		-	4.6/Fs	-	-	3.9/Fs	-	s
Passband Group Delay Deviation	0 - 20 kHz	-	-	±0.03/Fs		-	±0.01/Fs	s
Combined Digital and On-chip Analog Filter Response - Quad-Speed Mode - 192 kHz								
Passband (Note 9)	to -0.01 dB corner	0	-	0.1046	0	-	0.1042	Fs
	to -3 dB corner	0	-	0.4897	0	-	0.4813	Fs
Frequency Response 10 Hz to 20 kHz		-0.01	-	0.01	-0.01	-	0.01	dB
StopBand		0.6355	-	-	0.8683	-	-	Fs
StopBand Attenuation	(Note 10)	90	-	-	75	-	-	dB
Group Delay		-	4.7/Fs	-	-	4.2/Fs	-	s
Passband Group Delay Deviation	0 - 20 kHz	-	-	±0.01/Fs		-	±0.01/Fs	s

Notes:

9. Response is clock dependent and will scale with Fs. Note that the response plots (Figures 39 to 62) have been normalized to Fs and can be de-normalized by multiplying the X-axis scale by Fs.
10. Single- and Double-Speed Mode Measurement Bandwidth is from stopband to 3 Fs.
    Quad-Speed Mode Measurement Bandwidth is from stopband to 1.34 Fs.
11. De-emphasis is available only in Single-Speed Mode.

SWITCHING CHARACTERISTICS

(For CQZ, T_A = -10 to +70° C; For DQZ, T_A = -40 to +85° C;
VA = 5 V, VD =VLC= 3.3 V, VLS = 1.8 V to 5.25 V; Inputs: Logic 0 = DGND, Logic 1 = VLS, C_L = 30 pF)

Parameters	Symbol	Min	Typ	Max	Units
$\overline{\text{RST}}$ Pin Low Pulse Width (Note 12)		1	-	-	ms
PLL Clock Recovery Sample Rate Range		30	-	200	kHz
RMCK Output Jitter (Note 14)		-	200	-	ps RMS
RMCK Output Duty Cycle (Note 15)		45	50	55	%
OMCK Frequency (Note 13)		1.024	-	25.600	MHz
OMCK Duty Cycle (Note 13)		40	50	60	%
DAC_SCLK, ADC_SCLK Duty Cycle		45	50	55	%
DAC_LRCK, ADC_LRCK Duty Cycle		45	50	55	%
Master Mode					
RMCK to DAC_SCLK, ADC_SCLK active edge delay	t_{smd}	0	-	15	ns
RMCK to DAC_LRCK, ADC_LRCK delay	t_{lmd}	0	-	15	ns
Slave Mode					
DAC_SCLK, ADC_SCLK Falling Edge to ADC_SDOUT, ADC_SDOUT Output Valid	t_{dpd}		-	(Note 16)	ns
DAC_LRCK, ADC_LRCK Edge to MSB Valid	t_{lrpd}		-	26.5	ns
DAC_SDIN Setup Time Before DAC_SCLK Rising Edge	t_{ds}	10	-	-	ns
DAC_SDIN Hold Time After DAC_SCLK Rising Edge	t_{dh}	30	-	-	ns
DAC_SCLK, ADC_SCLK High Time	t_{sckh}	20	-	-	ns
DAC_SCLK, ADC_SCLK Low Time	t_{sckl}	20	-	-	ns
DAC_SCLK, ADC_SCLK falling to DAC_LRCK, SAI_LRCK Edge	t_{lrck}	-25	-	+25	ns

Notes:

12. After powering-up the CS42418, $\overline{\text{RST}}$ should be held low after the power supplies and clocks are settled.
13. See Table 1 on page 24 for suggested OMCK frequencies
14. Limit the loading on RMCK to 1 CMOS load if operating above 24.576 MHz.
15. Not valid when RMCK_DIV in "Clock Control (address 06h)" on page 48 is set to Multiply by 2.
16. 76.5 ns for Single-Speed and Double-Speed modes, 23 ns for Quad-Speed Mode.

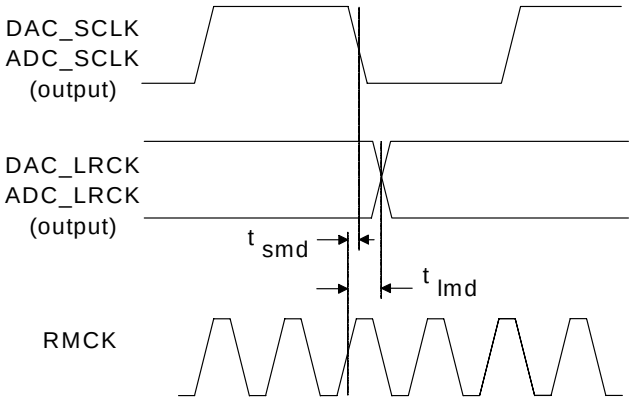

Figure 1. Serial Audio Port Master Mode Timing

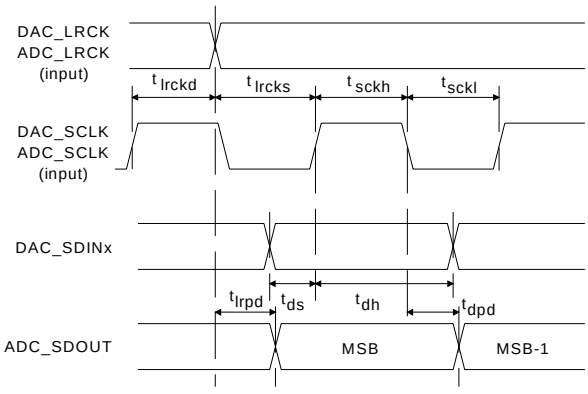

Figure 2. Serial Audio Port Slave Mode Timing

SWITCHING CHARACTERISTICS - CONTROL PORT - I²C FORMAT

(For CQZ, T_A = -10 to +70° C; For DQZ, T_A = -40 to +85° C; VA = 5 V, VD =VLS= 3.3 V; VLC = 1.8 V to 5.25 V; Inputs: Logic 0 = DGND, Logic 1 = VLC, C_L = 30 pF)

Parameter	Symbol	Min	Max	Unit
SCL Clock Frequency	f_{scl}	-	100	kHz
$\overline{RST}$ Rising Edge to Start	t_{irs}	500	-	ns
Bus Free Time Between Transmissions	t_{buf}	4.7	-	µs
Start Condition Hold Time (prior to first clock pulse)	t_{hdst}	4.0	-	µs
Clock Low time	t_{low}	4.7	-	µs
Clock High Time	t_{high}	4.0	-	µs
Setup Time for Repeated Start Condition	t_{sust}	4.7	-	µs
SDA Hold Time from SCL Falling (Note 17)	t_{hdd}	0	-	µs
SDA Setup time to SCL Rising	t_{sud}	250	-	ns
Rise Time of SCL and SDA	t_{rc}	-	1	µs
Fall Time SCL and SDA	t_{fc}	-	300	ns
Setup Time for Stop Condition	t_{susp}	4.7	-	µs
Acknowledge Delay from SCL Falling (Note 18)	t_{ack}	-	(Note 19)	ns

Notes:

17. Data must be held for sufficient time to bridge the transition time, t_{fc}, of SCL.
18. The acknowledge delay is based on MCLK and can limit the maximum transaction speed.
19. $\frac{15}{256 \times Fs}$ for Single-Speed Mode, $\frac{15}{128 \times Fs}$ for Double-Speed Mode, $\frac{15}{64 \times Fs}$ for Quad-Speed Mode

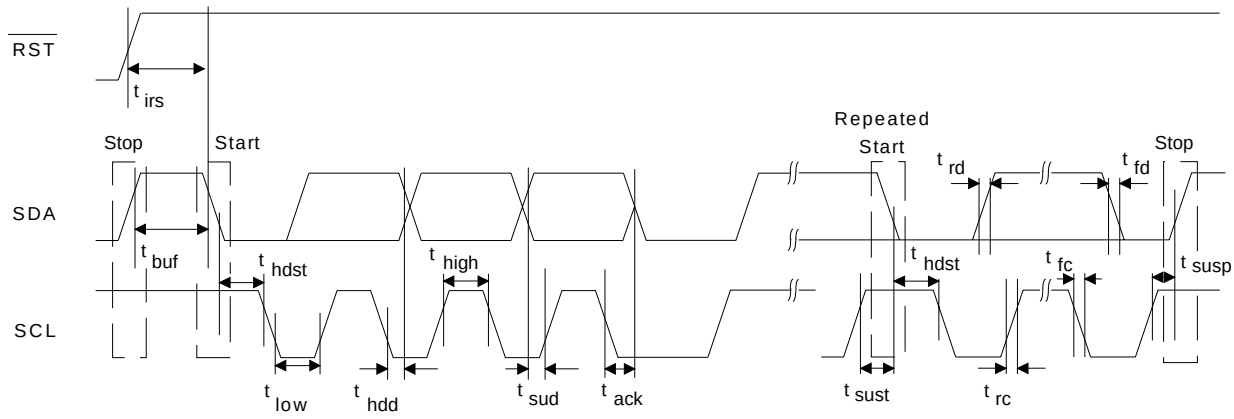

Figure 3. Control Port Timing - I²C Format

SWITCHING CHARACTERISTICS - CONTROL PORT - SPI™ FORMAT

(For CQZ, T_A = -10 to +70° C; For DQZ, T_A = -40 to +85° C; VA = 5 V, VD =VLS= 3.3 V; VLC = 1.8 V to 5.25 V; Inputs: Logic 0 = DGND, Logic 1 = VLC, C_L = 30 pF)

Parameter		Symbol	Min	Typ	Max	Units
CCLK Clock Frequency		f_{sck}	0	-	6.0	MHz
$\overline{CS}$ High Time Between Transmissions		t_{csh}	1.0	-	-	µs
$\overline{CS}$ Falling to CCLK Edge		t_{css}	20	-	-	ns
CCLK Low Time		t_{scl}	66	-	-	ns
CCLK High Time		t_{sch}	66	-	-	ns
CDIN to CCLK Rising Setup Time		t_{dsu}	40	-	-	ns
CCLK Rising to DATA Hold Time	(Note 20)	t_{dh}	15	-	-	ns
CCLK Falling to CDOUT Stable		t_{pd}	-	-	50	ns
Rise Time of CDOUT		t_{r1}	-	-	25	ns
Fall Time of CDOUT		t_{f1}	-	-	25	ns
Rise Time of CCLK and CDIN	(Note 21)	t_{r2}	-	-	100	ns
Fall Time of CCLK and CDIN	(Note 21)	t_{f2}	-	-	100	ns

Notes:

20. Data must be held for sufficient time to bridge the transition time of CCLK.
21. For f_{sck} <1 MHz.

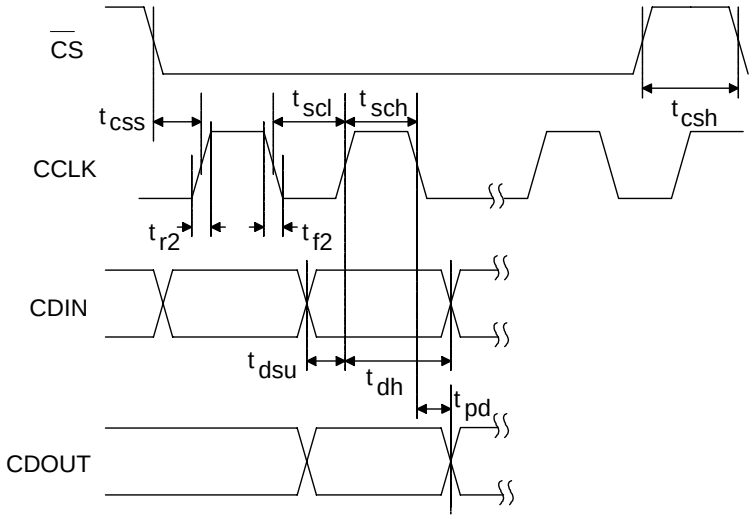

Figure 4. Control Port Timing - SPI Format

DC ELECTRICAL CHARACTERISTICS

(T_A = 25° C; AGND=DGND=0, all voltages with respect to ground; OMCK=12.288 MHz; Master Mode)

Parameter		Symbol	Min	Typ	Max	Units
Power Supply Current	normal operation, VA = 5 V	I_A	-	75	-	mA
(Note 22)	VD = 5 V	I_D	-	85	-	mA
	VD = 3.3 V	I_D	-	51	-	mA
	Interface current, VLC=5 V (Note 23)	I_{LC}	-	250	-	µA
	VLS=5 V	I_{LS}	-	13	-	mA
	power-down state (all supplies) (Note 24)	I_{pd}	-	250	-	µA
Power Consumption	(Note 22)					
VA=5 V, VD=VLS=VLC=3.3 V	normal operation		-	587	650	mW
	power-down (Note 24)		-	1.25	-	mW
VA=5 V, VD=VLS=VLC=5 V	normal operation		-	866	960	mW
	power-down (Note 24)		-	1.25	-	mW
Power Supply Rejection Ratio (Note 25)	(1 kHz)	PSRR	-	60	-	dB
	(60 Hz)		-	40	-	dB
VQ Nominal Voltage			-	2.7	-	V
VQ Output Impedance			-	50	-	kΩ
VQ Maximum allowable DC current			-	0.01	-	mA
FILT+ Nominal Voltage			-	5.0	-	V
FILT+ Output Impedance			-	35	-	kΩ
FILT+ Maximum allowable DC current			-	0.01	-	mA

Notes:

22. Current consumption increases with increasing FS and increasing OMCK. Max values are based on highest FS and highest OMCK. Variance between speed modes is negligible.
23. I_{LC} measured with no external loading on the SDA pin.
24. Power-Down Mode is defined as $\overline{RST}$ pin = Low with all clock and data lines held static.
25. Valid with the recommended capacitor values on FILT+ and VQ as shown in Figure 5.

DIGITAL INTERFACE CHARACTERISTICS

(For CQZ, T_A = +25° C; For DQZ, T_A = -40 to +85° C)

Parameters (Note 26)		Symbol	Min	Typ	Max	Units
High-Level Input Voltage	Serial Port	V_{IH}	0.7xVLS	-	-	V
	Control Port		0.7xVLC	-	-	V
Low-Level Input Voltage	Serial Port	V_{IL}	-	-	0.2xVLS	V
	Control Port		-	-	0.2xVLC	V
High-Level Output Voltage at I_o=2 mA	(Note 27) Serial Port	V_{OH}	VLS-1.0	-	-	V
	Control Port		VLC-1.0	-	-	V
	MUTEC, GPOx		VA-1.0	-	-	V
Low-Level Output Voltage at I_o=2 mA (Note 27) Serial Port, Control Port, MUTEC, GPOx		V_{OL}	-	-	0.4	V
Input Leakage Current		I_{in}	-	-	±10	µA
Input Capacitance			-	8	-	pF
MUTEC Drive Current			-	3	-	mA

Notes:

26. Serial Port signals include: RMCK, OMCK, ADC_SCLK, ADC_LRCK, DAC_SCLK, DAC_LRCK, ADC_SDOUT, DAC_SDIN1-4, ADCIN1/2
    Control Port signals include: SCL/CCLK, SDA/CDOUT, AD0/$\overline{CS}$, AD1/CDIN, INT, $\overline{RST}$
27. When operating RMCK above 24.576 MHz, limit the loading on the signal to 1 CMOS load.

2. PIN DESCRIPTIONS

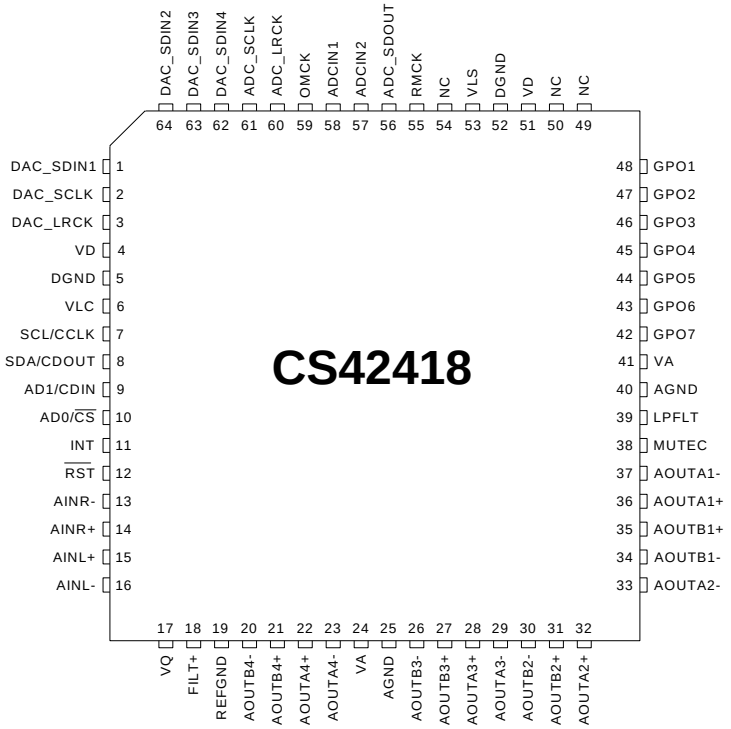

Pin Name	#	Pin Description
DAC_SDIN1 DAC_SDIN2 DAC_SDIN3 DAC_SDIN4	1 64 63 62	**DAC Serial Audio Data Input** (*Input*) - Input for two's complement serial audio data.
DAC_SCLK	2	**DAC Serial Clock** *(Input/Output)* - Serial clock for the DAC serial audio interface.
DAC_LRCK	3	**DAC Left Right Clock** (*Input*/*Output*) - Determines which channel, Left or Right, is currently active on the DAC serial audio data line.
VD	4 51	**Digital Power** (*Input*) - Positive power supply for the digital section.
DGND	5 52	**Digital Ground** (*Input*) - Ground reference. Should be connected to digital ground.
VLC	6	**Control Port Power** (*Input*) **-** Determines the required signal level for the control port.
SCL/CCLK	7	**Serial Control Port Clock** (*Input*) - Serial clock for the serial control port. Requires an external pull-up resistor to the logic interface voltage in I²C mode as shown in the Typical Connection Diagram.
SDA/CDOUT	8	**Serial Control Data** (*Input/Output*) **-** SDA is a data I/O line in I²C mode and requires an external pull-up resistor to the logic interface voltage, as shown in the Typical Connection Diagram. CDOUT is the output data line for the control port interface in SPI mode.
AD1/CDIN	9	**Address Bit 1 (I²C)/Serial Control Data (SPI)** (*Input*) - AD1 is a chip address pin in I²C mode; CDIN is the input data line for the control port interface in SPI mode.
AD0/$\overline{CS}$	10	**Address Bit 0 (I²C)/Control Port Chip Select (SPI)** *(Input*) **-** AD0 is a chip address pin in I²C mode; $\overline{CS}$ is the chip select signal in SPI mode.
INT	11	**Interrupt** *(Output*) - The CS42418 will generate an interrupt condition as per the Interrupt Mask register. See "Interrupts" on page 37 for more details.

$\overline{\text{RST}}$	12	**Reset** (*Input*) - The device enters a low power mode and all internal registers are reset to their default settings when low.
AINR- AINR+	13 14	**Differential Right Channel Analog Input** (*Input*) - Signals are presented differentially to the delta-sigma modulators via the AINR+/- pins.
AINL+ AINL-	15 16	**Differential Left Channel Analog Input** (*Input*) - Signals are presented differentially to the delta-sigma modulators via the AINL+/- pins.
VQ	17	**Quiescent Voltage** (*Output*) **-** Filter connection for internal quiescent reference voltage.
FILT+	18	**Positive Voltage Reference** (*Output*) - Positive reference voltage for the internal sampling circuits.
REFGND	19	**Reference Ground** (*Input*) - Ground reference for the internal sampling circuits.
AOUTA1 +,- AOUTB1 +,- AOUTA2 +,- AOUTB2 +,- AOUTA3 +,- AOUTB3 +,- AOUTA4 +,- AOUTB4 +,-	36,37 35,34 32,33 31,30 28,29 27,26 22,23 21,20	**Differential Analog Output** (*Output*) - The full-scale differential analog output level is specified in the Analog Characteristics specification table.
VA	24 41	**Analog Power** (*Input*) - Positive power supply for the analog section.
AGND	25 40	**Analog Ground** (*Input*) - Ground reference. Should be connected to analog ground.
MUTEC	38	**Mute Control** (*Output*) - The Mute Control pin outputs high impedance following an initial power-on condition or whenever the PDN bit is set to a '1', forcing the codec into power-down mode. The signal will remain in a high impedance state as long as the part is in power-down mode. The Mute Control pin goes to the selected "active" state during reset, muting, or if the master clock to left/right clock frequency ratio is incorrect. This pin is intended to be used as a control for external mute circuits to prevent the clicks and pops that can occur in any single supply system. The use of external mute circuits are not mandatory but may be desired for designs requiring the absolute minimum in extraneous clicks and pops.
LPFLT	39	**PLL Loop Filter** (*Output*) - An RC network should be connected between this pin and ground.
GPO7 GPO6 GPO5 GPO4 GPO3 GPO2 GPO1	42 43 44 45 46 47 48	**General Purpose Output** (*Output*) - These pins can be configured as general purpose output pins, an ADC overflow interrupt or Mute Control outputs according to the General Purpose Pin Control registers.
VLS	53	**Serial Port Interface Power** (*Input*) - Determines the required signal level for the serial port interfaces.
RMCK	55	**Recovered Master Clock** (*Output*) - Recovered master clock output from the External Clock Reference (OMCK, pin 59) or the PLL which is locked to the incoming ADC_LRCK.
ADC_SDOUT	56	**ADC Serial Data Output** (*Output*) - Output for two's complement serial audio PCM data from the output of the internal and external ADCs.
ADCIN1 ADCIN2	58 57	**External ADC Serial Input** (*Input*) - The CS42418 provides for up to two external stereo analog to digital converter inputs to provide a maximum of six channels on one serial data output line when the CS42418 is placed in One-Line Mode.
OMCK	59	**External Reference Clock** (*Input*) - External clock reference that must be within the ranges specified in the register "OMCK Frequency (OMCK Freqx)" on page 48.
ADC_LRCK	60	**ADC Left/Right Clock** (*Input*/*Output*) - Determines which channel, Left or Right, is currently active on the ADC serial audio data line.
ADC_SCLK	61	**ADC Serial Clock** *(Input/Output)* - Serial clock for the ADC serial audio interface.

3. TYPICAL CONNECTION DIAGRAMS

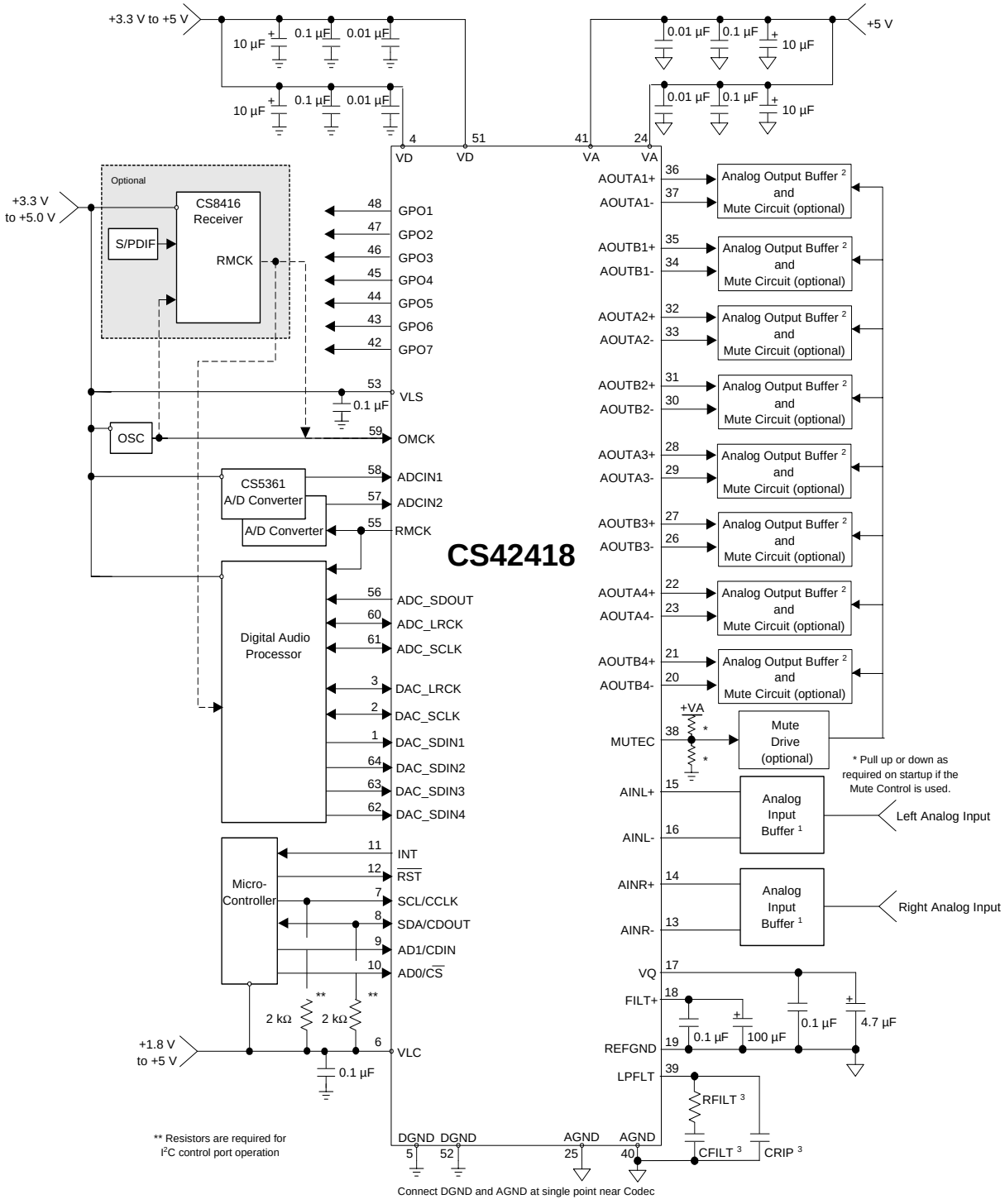

1. See the ADC Input Filter section in the Appendix.
2. See the DAC Output Filter section in the Appendix.
3. See the PLL Filter section in the Appendix.

Figure 5. Typical Connection Diagram

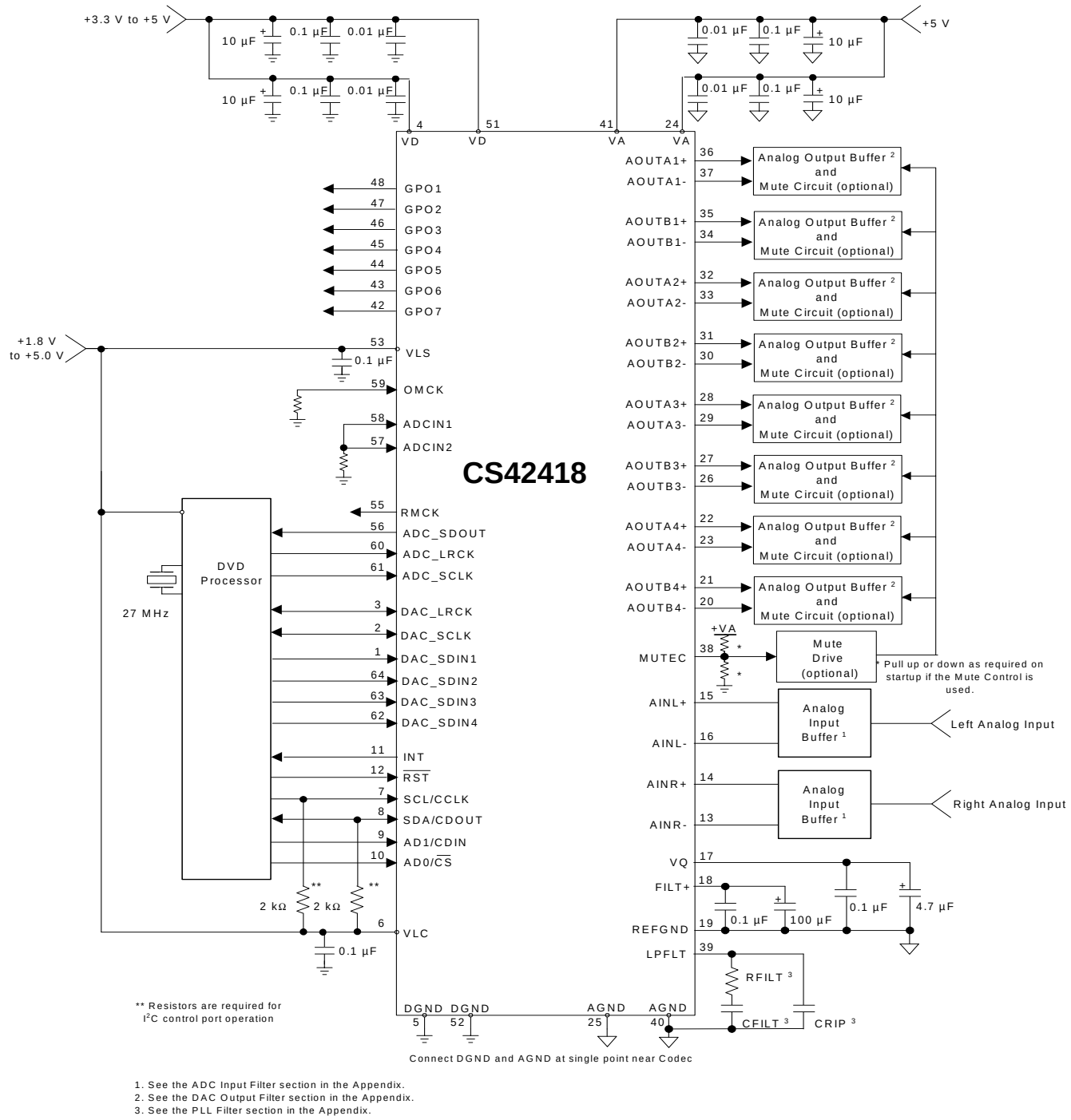

1. See the ADC Input Filter section in the Appendix.
2. See the DAC Output Filter section in the Appendix.
3. See the PLL Filter section in the Appendix.

Figure 6. Typical Connection Diagram using the PLL

4. APPLICATIONS

4.1 Overview

The CS42418 is a highly integrated mixed-signal 24-bit audio codec comprised of 2 analog-to-digital converters (ADC), implemented using multi-bit delta-sigma techniques, and 8 digital-to-analog converters (DAC). Other functions integrated within the codec include independent digital volume controls for each DAC, digital de-emphasis filters for DAC, digital gain control for ADC channels, ADC high-pass filters, and an on-chip voltage reference. All serial data is transmitted through one configurable serial audio interface for the ADC with enhanced one-line modes of operation, allowing up to 6 channels of serial audio data on one data line. All functions are configured through a serial control port operable in SPI mode or in I²C mode. 5 and 6 show the recommended connections for the CS42418.

The CS42418 operates in one of three oversampling modes based on the input sample rate. Mode selection is determined by the FM bits in register "Functional Mode (address 03h)" on page 43. Single-Speed Mode (SSM) supports input sample rates up to 50 kHz and uses a 128x oversampling ratio. Double-Speed Mode (DSM) supports input sample rates up to 100 kHz and uses an oversampling ratio of 64x. Quad-Speed Mode (QSM) supports input sample rates up to 192 kHz and uses an oversampling ratio of 32x.

Using the integrated PLL, a low-jitter clock is recovered from the ADC LRCK input signal. The recovered clock or an externally supplied clock attached to the OMCK pin can be used as the System Clock.

4.2 Analog Inputs

4.2.1 Line-Level Inputs

AINR+, AINR-, AINL+, and AINL- are the line-level differential analog inputs. The analog signal must be externally biased to VQ, approximately 2.7 V, before being applied to these inputs. The level of the signal can be adjusted for the left and right ADC independently through the ADC Left and Right Channel Gain Control Registers on page 55. The ADC output data is in two's complement binary format. For inputs above positive full scale or below negative full scale, the ADC will output 7FFFFFH or 800000H, respectively and cause the ADC Overflow bit in the register "Interrupt Status (address 20h) (Read Only)" on page 56 to be set to a '1'. The GPO pins may also be configured to indicate an overflow condition has occurred in the ADC. See "General-Purpose Pin Control (addresses 29h to 2Fh)" on page 58 for proper configuration. Figure 7 shows the full-scale analog input levels. See "ADC Input Filter" on page 61 for a recommended input buffer.

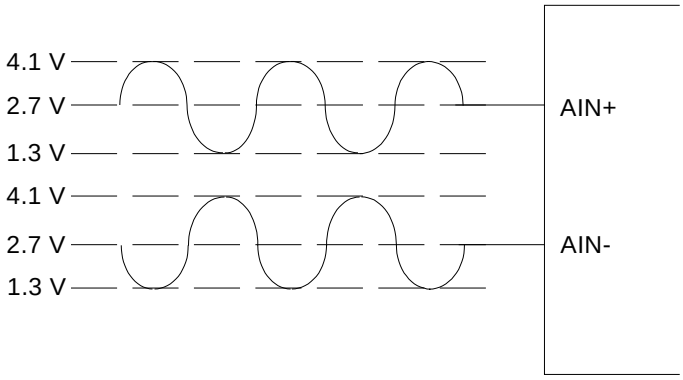

Full-Scale Input Level= (AIN+) - (AIN-)= 5.6 Vpp

Figure 7. Full-Scale Analog Input

4.2.2 High-Pass Filter and DC Offset Calibration

The high-pass filter continuously subtracts a measure of the DC offset from the output of the decimation filter. The high-pass filter can be independently enabled and disabled. If the HPF_Freeze bit is set during normal operation, the current value of the DC offset for the corresponding channel is frozen and this DC offset will continue to be subtracted from the conversion result. This feature makes it possible to perform a system DC offset calibration by:

1. Running the CS42418 with the high-pass filter enabled until the filter settles. See the Digital Filter Characteristics for filter settling time.
2. Disabling the high-pass filter and freezing the stored DC offset.

The high-pass filters are controlled using the HPF_FREEZE bit in the register "Misc Control (address 05h)" on page 46.

4.3 Analog Outputs

4.3.1 Line-Level Outputs and Filtering

The CS42418 contains on-chip buffer amplifiers capable of producing line-level differential outputs. These amplifiers are biased to a quiescent DC level of approximately VQ.

The delta-sigma conversion process produces high-frequency noise beyond the audio passband, most of which is removed by the on-chip analog filters. The remaining out-of-band noise can be attenuated using an off-chip low-pass filter. See "DAC Output Filter" on page 61 for a recommended output buffer. This filter configuration accounts for the normally differing AC loads on the AOUT+ and AOUT- differential output pins. It also shows an AC coupling configuration which minimizes the number of required AC coupling capacitors. Figure 8 shows the full-scale analog output levels.

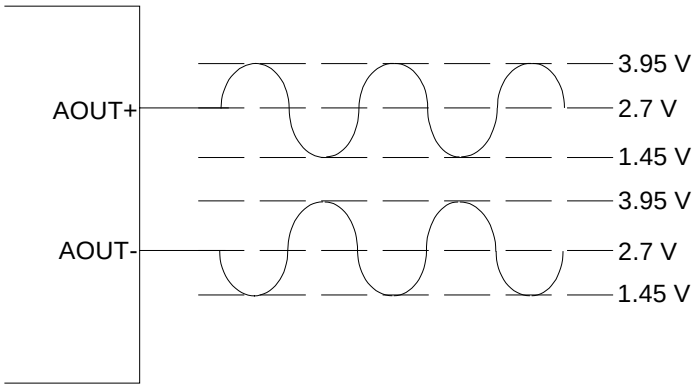

Full-Scale Output Level= (AIN+) - (AIN-)= 5 Vpp

Figure 8. Full-Scale Output

4.3.2 Interpolation Filter

To accommodate the increasingly complex requirements of digital audio systems, the CS42418 incorporates selectable interpolation filters for each mode of operation. A "fast" and a "slow" roll-off filter is available in Single-, Double-, and Quad-Speed Modes. These filters have been designed to accommodate a variety of musical tastes and styles. The FILT_SEL bit found in the register "Misc Control (address 05h)" on page 46 selects which filter is used. Filter response plots can be found in Figures 39 to 62.

4.3.3 Digital Volume and Mute Control

Each DAC's output level is controlled via the Volume Control registers operating over the range of 0 to -127 dB attenuation with 0.5 dB resolution. See "Volume Control (addresses 0Fh, 10h, 11h, 12h, 13h, 14h, 15h, 16h)" on page 53. Volume control changes are programmable to ramp in increments of 0.125 dB at the rate controlled by the SZC[1:0] bits in the Digital Volume Control register. See "Volume Transition Control (address 0Dh)" on page 51.

Each output can be independently muted via mute control bits in the register "Channel Mute (address 0Eh)" on page 52. When enabled, each XX_MUTE bit attenuates the corresponding DAC to its maximum value (-127 dB). When the XX_MUTE bit is disabled, the corresponding DAC returns to the attenuation level set in the Volume Control register. The attenuation is ramped up and down at the rate specified by the SZC[1:0] bits.

The Mute Control pin, MUTEC, is typically connected to an external mute control circuit. The Mute Control pin outputs high impedance during Power-Up or in Power-Down Mode by setting the PDN bit in the register "Power Control (address 02h)" on page 43 to a '1'. Once out of Power-Down Mode, the pin can be controlled by the user via the control port, or automatically asserted high when zero data is present on all DAC inputs, or when serial port clock errors are present. To prevent large transients on the output, it is desirable to mute the DAC outputs before the Mute Control pin is asserted. Please see the MUTEC pin in the Pin Descriptions section for more information.

Each of the GPO1-GPO7 can be programmed to provide a hardware MUTE signal to individual circuits. Each pin can be programmed as an output, with specific muting capabilities as defined by the function bits in the register "General-Purpose Pin Control (addresses 29h to 2Fh)" on page 58.

4.3.4 ATAPI Specification

The CS42418 implements the channel-mixing functions of the ATAPI CD-ROM specification. The ATAPI functions are applied per A-B pair. Refer to Table 14 on page 54 and Figure 9 for additional information.

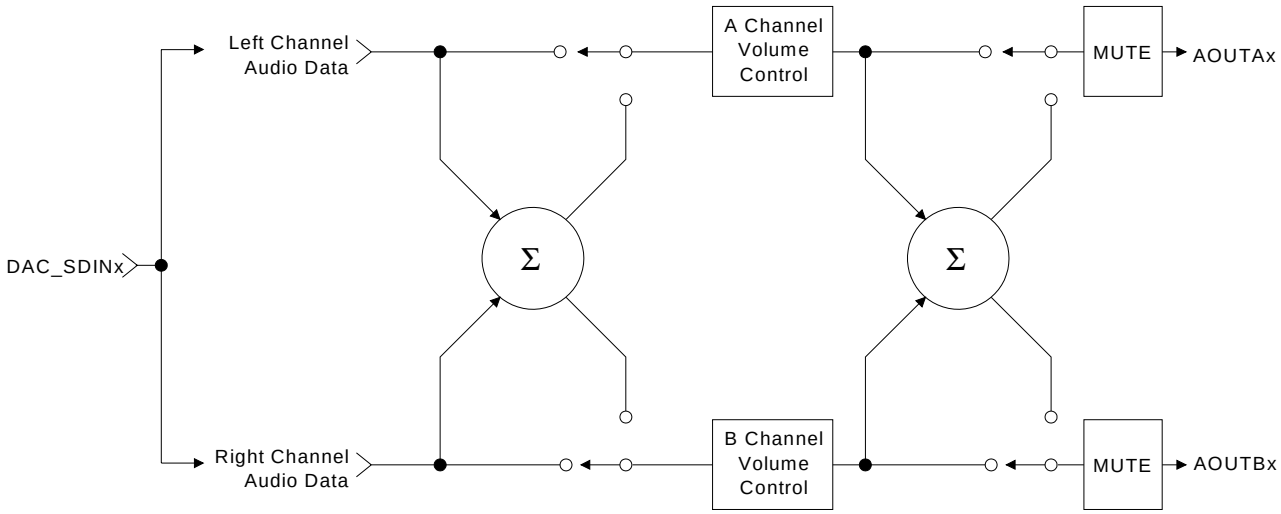

Figure 9. ATAPI Block Diagram (x = channel pair 1, 2, 3, 4)

4.4 Clock Generation

The clock generation for the CS42418 is shown in the figure below. The internal MCLK is derived from the output of the PLL or a master clock source attached to OMCK. The mux selection is controlled by the SW_CTRLx bits and can be configured to manual switch mode only, or automatically switch on loss of PLL lock to the other source input.

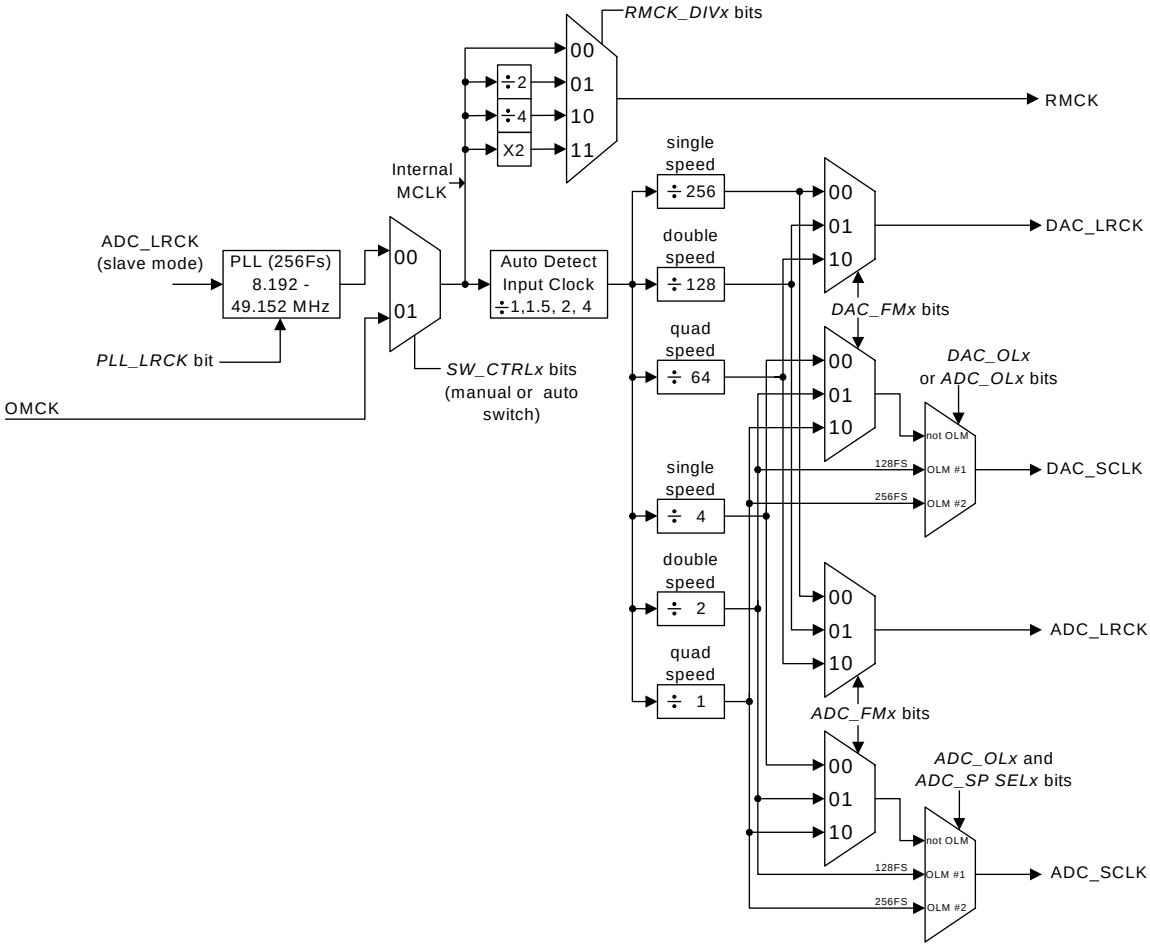

Figure 10. Clock Generation

4.4.1 PLL and Jitter Attenuation

The PLL can be configured to lock onto the incoming ADC_LRCK signal from the ADC Serial Port and generate the required internal master clock frequency. There are some applications where low jitter in the recovered clock, presented on the RMCK pin, is important. For this reason, the PLL has been designed to have good jitter-attenuation characteristics. By setting the PLL_LRCK bit to a '1' in the register "Clock Control (address 06h)" on page 48, the PLL will lock to the incoming ADC_LRCK and generate an output master clock (RMCK) of 256Fs. Table 2 shows the output of the PLL with typical input Fs values for ADC_LRCK.

See "Appendix B: PLL Filter" on page 62 for more information concerning PLL operation, required filter components, optimal layout guidelines, and jitter-attenuation characteristics.

4.4.2 OMCK System Clock Mode

A special clock-switching mode is available that allows the clock that is input through the OMCK pin to be used as the internal master clock. This feature is controlled by the SW_CTRLx bits in register "Clock Control (address 06h)" on page 48. An advanced auto-switching mode is also implemented to maintain master clock functionality. The clock auto-switching mode allows the clock input through OMCK to be used as a clock in the system without any disruption when the PLL loses lock, for example, when the LRCK is removed from ADC_LRCK. This clock-switching is done glitch-free. A clock adhering to the specifications detailed in the Switching Characteristics table on page 11 must be applied to the OMCK pin at all times that the FRC_PLL_LK bit is set to '0' (See "Force PLL Lock (FRC_PLL_LK)" on page 49).

Sample Rate (kHz)	OMCK (MHz)								
	Single-Speed (4 to 50 kHz)			Double-Speed (50 to 100 kHz)			Quad-Speed (100 to 192 kHz)		
	256x	384x	512x	128x	192x	256x	64x	96x	128x
48	12.2880	18.4320	24.5760	-	-	-	-	-	-
96	-	-	-	12.2880	18.4320	24.5760	-	-	-
192	-	-	-	-	-	-	12.2880	18.4320	24.5760

Table 1. Common OMCK Clock Frequencies

4.4.3 Master Mode

In Master Mode, the serial interface timings are derived from an external clock attached to OMCK or from the output of the PLL with an input reference to the ADC_LRCK input from the ADC serial port. The DAC Serial Port and ADC Serial Port can both be masters only when OMCK is used as the clock source. When using the PLL output, the ADC Serial Port must be slave and the DAC Serial Port can operate in Master Mode. Master clock selection and operation is configured with the SW_CTRL1:0 bits in the Clock Control Register (See "Clock Control (address 06h)" on page 48).

4.4.4 Slave Mode

In Slave Mode, DAC_LRCK, DAC_SCLK and/or ADC_LRCK and ADC_SCLK operate as inputs. The Left/Right clock signal must be equal to the sample rate, Fs, and must be synchronously derived from the supplied master clock, OMCK, or must be synchronous to the supplied ADC_LRCK used as the input to the PLL. In this latter scenario, the PLL output becomes the internal master clock. The supported PLL output frequencies are shown in Table 2.

Sample Rate (kHz)	PLL Output (MHz)		
	Single-Speed (4 to 50kHz)	Double-Speed (50 to 100kHz)	Quad-Speed (100 to 192kHz)
	256x	256x	256x
32	8.1920	-	-
44.1	11.2896	-	-
48	12.2880	-	-
64	-	16.3840	-
88.2	-	22.5792	-
96	-	24.5760	-
176.4	-	-	45.1584
192	-	-	49.1520

The serial bit clock, DAC_SCLK and/or ADC_SCLK, must be synchronous to the corresponding DAC_LRCK/ADC_LRCK and be equal to 128x, 64x, 48x or 32x Fs, depending on the interface format selected and desired speed mode.

When the device is clocked from OMCK, the frequency of OMCK must be at least twice the frequency of the fastest Slave Mode, SCLK. For example, if both serial ports are in Slave Mode with one SCLK running at 32x Fs and the other at 64x Fs, the slowest OMCK signal that can be used to clock the device is 128x Fs.

When either serial port is in Slave Mode, its respective LRCK signal must be present for proper device operation.

In Slave Mode, One-Line Mode #1 is supported; One-Line Mode #2 is not.

The sample rate to OMCK ratios and OMCK frequency requirements for Slave Mode operation are shown in Table 1. Refer to Table 3 for required clock ratios.

	Single-Speed	Double-Speed	Quad-Speed	One-Line Mode #1
OMCK/LRCK Ratio	256x, 384x, 512x	128x, 192x, 256x	64x, 96x, 128x	256x
SCLK/LRCK Ratio	32x, 48x, 64x, 128x	32x, 48x, 64x	32x, 48x, 64x	128x

Table 3. Slave Mode Clock Ratios

4.5 Digital Interfaces

4.5.1 Serial Audio Interface Signals

The CS42418 interfaces to an external Digital Audio Processor via two independent serial ports, the DAC serial port, DAC_SP, and the ADC serial port, ADC_SP. The digital output of the internal ADCs use the ADC_SDOUT pin and can be configured to use either the ADC or DAC serial port timings.These configuration bits and the selection of Single-, Double- or Quad-Speed Mode for DAC_SP and ADC_SP are found in register “Functional Mode (address 03h)” on page 43.

The serial interface clocks, ADC_SCLK for ADC_SP and DAC_SCLK for DAC_SP, are used for transmitting and receiving audio data. Either ADC_SCLK or DAC_SCLK can be generated by the CS42418 (Master Mode), or it can be input from an external source (Slave Mode). Master or Slave Mode selection is made using bits DAC_SP M/$\overline{S}$ and ADC_SP M/$\overline{S}$ in register “Misc Control (address 05h)” on page 46.

The Left/Right clock (ADC_LRCK or DAC_LRCK) is used to indicate left and right data frames and the start of a new sample period. It may be an output of the CS42418 (Master Mode), or it may be generated by an external source (Slave Mode). As described in later sections, particular modes of operation do allow the sample rate, Fs, of the ADC_SP and the DAC_SP to be different, but must be multiples of each other.

The serial data interface format selection (Left/Right-Justified, I²S or One-Line Mode) for the ADC serial port data out pin, ADC_SDOUT, and the DAC input pins, DAC_SDIN1:4, is configured using the appropriate bits in the register “Interface Formats (address 04h)” on page 45. The serial audio data is presented in two's complement binary form with the MSB first in all formats.

DAC_SDIN1, DAC_SDIN2, DAC_SDIN3and DAC_SDIN4 are the serial data input pins supplying the internal DAC. ADC_SDOUT, the ADC data output pin, carries data from the two internal 24-bit ADCs and, when configured for one-line mode, up to four additional ADC channels attached externally to the signals ADCIN1 and ADCIN2 (typically two CS5361 stereo ADCs). When operated in One-Line Mode, 6 channels of DAC data are input on DAC_SDIN1, two additional DAC channels on DAC_SDIN4, and 6 channels of ADC data are output on ADC_SDOUT. Table 4 on page 26 outlines the serial port channel allocations.

		Serial Inputs / Outputs
DAC_SDIN1	left channel	DAC #1
	right channel	DAC #2
	One-Line Mode	DAC channels 1,2,3,4,5,6
DAC_SDIN2	left channel	DAC #3
	right channel	DAC #4
	One-Line Mode	not used
DAC_SDIN3	left channel	DAC #5
	right channel	DAC #6
	One-Line Mode	not used
DAC_SDIN4	left channel	DAC #7
	right channel	DAC #8
	one line mode	DAC channels 7,8
ADC_SDOUT	left channel	ADC #1
	right channel	ADC #2
	One-Line Mode	ADC channels 1,2,3,4,5,6
ADCIN1	left channel	External ADC #3
	right channel	External ADC #4
ADCIN2	left channel	External ADC #5
	right channel	External ADC #6

Table 4. Serial Audio Port Channel Allocations

4.5.2 Serial Audio Interface Formats

The DAC_SP and ADC_SP digital audio serial ports support five formats with varying bit depths from 16 to 24 as shown in Figures 11 to 15. These formats are selected using the configuration bits in the registers, "Functional Mode (address 03h)" on page 43 and "Interface Formats (address 04h)" on page 45. For the diagrams below, Single-Speed Mode is equivalent to Fs = 32, 44.1, 48 kHz; Double-Speed Mode is for Fs = 64, 88.2, 96 kHz; and Quad-Speed Mode is for Fs = 176.4, 196 kHz.

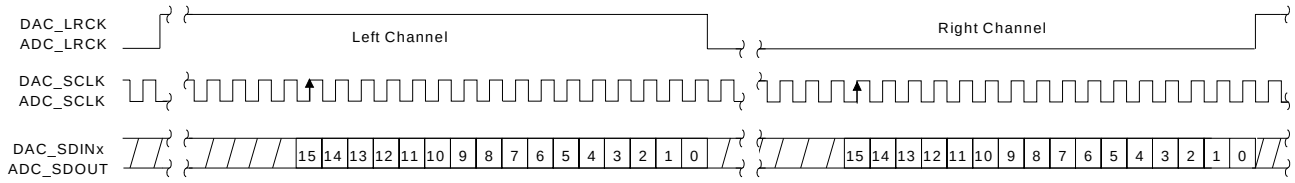

Right-Justified Mode, Data Valid on Rising Edge of SCLK			
Bits/Sample	SCLK Rate(s)		Notes
	Master	Slave	
16	64 Fs	48, 64, 128 Fs	Single-Speed Mode
	64 Fs	64 Fs	Double-Speed Mode
	64 Fs	64 Fs	Quad-Speed Mode
24	64, 128, 256 Fs	64, 128 Fs	Single-Speed Mode
	64 Fs	64 Fs	Double-Speed Mode
	64 Fs	64 Fs	Quad-Speed Mode

Figure 11. Right-Justified Serial Audio Formats

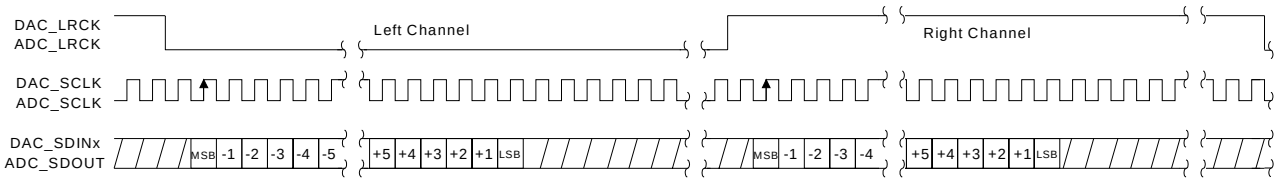

I²S Mode, Data Valid on Rising Edge of SCLK			
Bits/Sample	SCLK Rate(s)		Notes
	Master	Slave	
16	64 Fs	48, 64, 128 Fs	Single-Speed Mode
	64 Fs	64 Fs	Double-Speed Mode
	64 Fs	64 Fs	Quad-Speed Mode
18 to 24	64, 128, 256 Fs	48, 64, 128 Fs	Single-Speed Mode
	64 Fs	64 Fs	Double-Speed Mode
	64 Fs	64 Fs	Quad-Speed Mode

Figure 12. I²S Serial Audio Formats

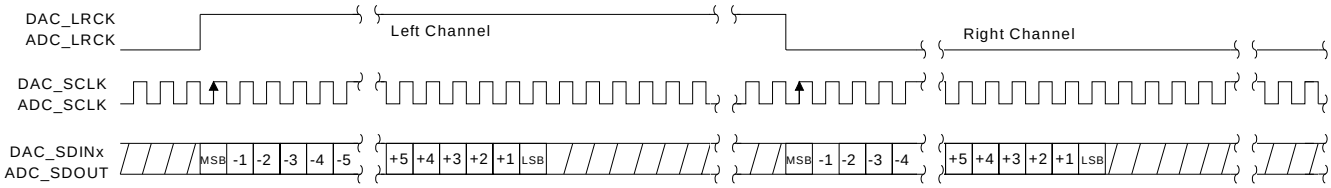

Left-Justified Mode, Data Valid on Rising Edge of SCLK			
Bits/Sample	SCLK Rate(s)		Notes
	Master	Slave	
16	64 Fs	32, 48, 64, 128 Fs	Single-Speed Mode
	64 Fs	32, 64 Fs	Double-Speed Mode
	64 Fs	32, 64 Fs	Quad-Speed Mode
18 to 24	64, 128, 256 Fs	48, 64, 128 Fs	Single-Speed Mode
	64 Fs	64 Fs	Double-Speed Mode
	64 Fs	64 Fs	Quad-Speed Mode

Figure 13. Left-Justified Serial Audio Formats

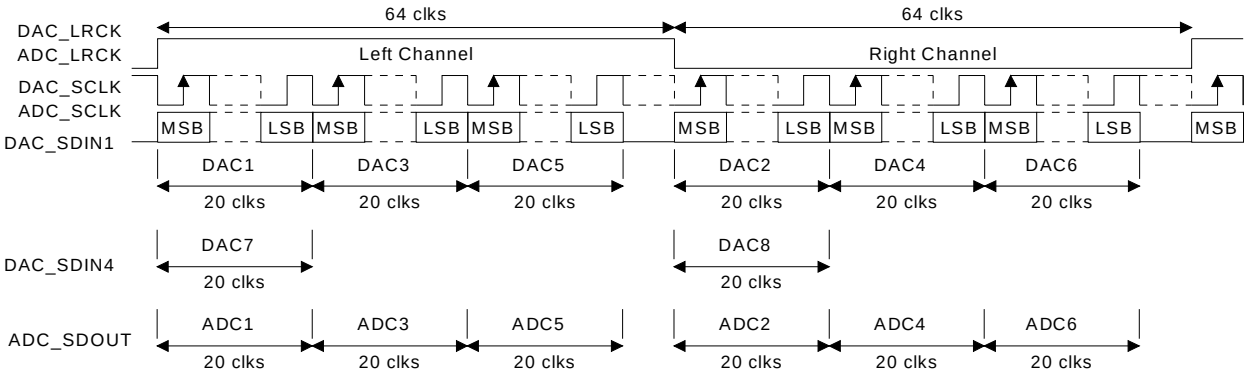

One Line Data Mode #1, Data Valid on Rising Edge of SCLK			
Bits/Sample	SCLK Rate(s)		Notes
	Master	Slave	
20	128 Fs	128 Fs	single-speed mode
	128 Fs	128Fs	double-speed mode

Figure 14. One Line Mode #1 Serial Audio Format

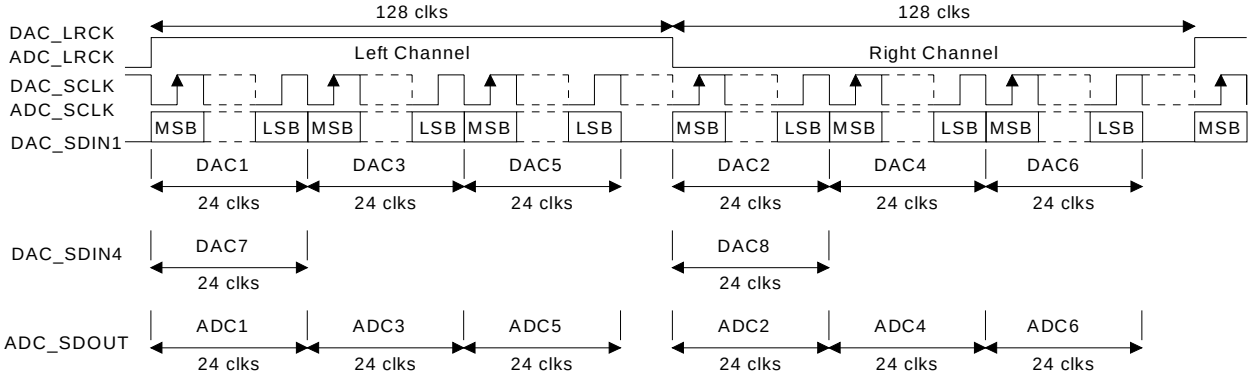

One Line Data Mode #2, Data Valid on Rising Edge of SCLK			
Bits/Sample	SCLK Rate(s)		Notes
	Master	Slave	
24	256 Fs	not supported	single-speed mode

Figure 15. One Line Mode #2 Serial Audio Format

4.5.3 ADCIN1/ADCIN2 Serial Data Format

The two serial data lines which interface to the optional external ADCs, ADCIN1 and ADCIN2, support only left-justified, 24-bit samples at 64Fs or 128Fs. This interface is not affected by any of the serial port configuration register bit settings. These serial data lines are used when supporting One-Line Mode of operation with external ADCs attached. If these signals are not being used, they should be tied together and wired to GND via a pull-down resistor.

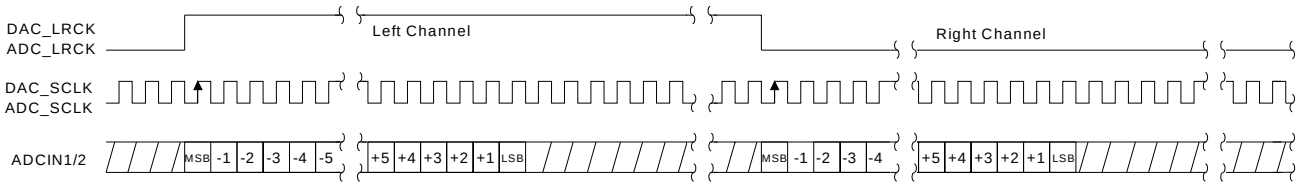

Left-Justified Mode, Data Valid on Rising Edge of SCLK		
Bits/Sample	SCLK Rate(s)	Notes
24	64, 128 Fs	Single-Speed Mode, Fs= 32, 44.1, 48 KHz
	64 Fs	Double-Speed Mode, Fs= 64, 88.2, 96 KHz
	not supported	Quad-Speed Mode, Fs= 176.4, 192 KHz

Figure 16. ADCIN1/ADCIN2 Serial Audio Format

For proper operation, the CS42418 must be configured to select which SCLK/LRCK is being used to clock the external ADCs. The EXT ADC SCLK bit in register “Misc Control (address 05h)” on page 46 must be set accordingly. Set this bit to ‘1’ if the external ADCs are wired using the DAC_SP clocks. If the ADCs are wired to use the ADC_SP clocks, set this bit to ‘0’.

4.5.4 One-Line Mode (OLM) Configurations

4.5.4.1 OLM Config #1

One-Line Mode Configuration #1 can support up to 8 channels of DAC data, and 6 channels of ADC data. This is the only configuration which will support up to 24-bit samples at a sampling frequency of 48 kHz on all channels for both the DAC and ADC.

Register / Bit Settings	Description
Functional Mode Register (addr = 03h)	
Set DAC_FMx = ADC_FMx = 00,01,10	DAC_LRCK must equal ADC_LRCK; sample rate conversion not supported
Set ADC_CLK_SEL = 0	Configure ADC_SDOUT to be clocked from the DAC_SP clocks.
Interface Format Register (addr = 04h)	
Set DIFx bits to proper serial format	Select the digital interface format when not in One-Line Mode
Set ADC_OLx bits = 00,01,10	Select ADC operating mode, see table below for valid combinations
Set DAC_OLx bits = 00,01,10	Select DAC operating mode, see table below for valid combinations
Misc. Control Register (addr = 05h)	
Set DAC_SP M/S = 1	Configure DAC Serial Port to Master Mode.
Set ADC_SP M/S = 1	Configure ADC Serial Port to Master Mode.
Set EXT ADC SCLK = 0	Identify external ADC clock source as SAI Serial Port.

		DAC Mode		
		Not One-Line Mode	**One-Line Mode #1**	**One-Line Mode #2**
ADC Mode	**Not One-Line Mode**	DAC_SCLK=64Fs DAC_LRCK=SSM/DSM/QSM	DAC_SCLK=128Fs DAC_LRCK=SSM/DSM ADC_SCLK=64Fs ADC_LRCK=DAC_LRCK	not valid
	One-Line Mode #1	DAC_SCLK=128Fs DAC_LRCK=SSM/DSM ADC_SCLK=64Fs ADC_LRCK=DAC_LRCK	DAC_SCLK=128Fs DAC_LRCK=SSM/DSM ADC_SCLK=64Fs ADC_LRCK=DAC_LRCK	not valid
	One-Line Mode #2	DAC_SCLK=256Fs DAC_LRCK=SSM ADC_SCLK=64Fs ADC_LRCK=DAC_LRCK	not valid	DAC_SCLK=256Fs DAC_LRCK=SSM ADC_SCLK=64Fs ADC_LRCK=DAC_LRCK

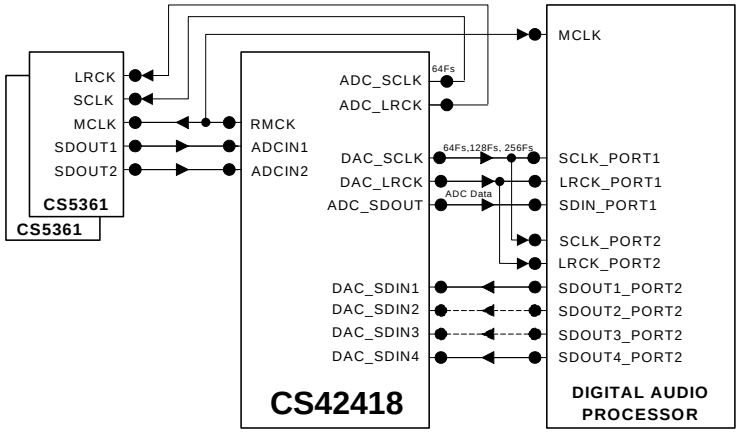

Figure 17. OLM Configuration #1

4.5.4.2 OLM Config #2

This configuration will support up to 8 channels of DAC data or 6 channels of ADC data and will handle up to 20-bit samples at a sampling-frequency of 96 kHz on all channels for both the DAC and ADC. The output data stream of the internal and external ADCs is configured to use the ADC_SDOUT output and run at the DAC Serial Port sample frequency.

Register / Bit Settings	Description
Functional Mode Register (addr = 03h)	
Set DAC_FMx = 00,01,10	DAC_LRCK can run at SSM, DSM or QSM independent of ADC_LRCK
Set ADC_FMx = 00,01,10	ADC_LRCK can run at SSM, DSM or QSM independent of DAC_LRCK
Set ADC_CLK_SEL = 1	Configure ADC_SDOUT to be clocked from the ADC_SP clocks.
Interface Format Register (addr = 04h)	
Set DIFx bits to proper serial format	Select the digital interface format when not in One-Line Mode
Set ADC_OLx bits = 00,01,10	Select ADC operating mode, see table below for valid combinations
Set DAC_OLx bits = 00,01	Select DAC operating mode, see table below for valid combinations
Misc. Control Register (addr = 05h)	
Set DAC_SP M/S = 1	Set DAC Serial Port to Master Mode.
Set ADC_SP M/S = 1	Set ADC Serial Port to Master Mode.
Set EXT ADC SCLK = 1	Identify external ADC clock source as DAC Serial Port.

		DAC Mode		
		Not One-Line Mode	**One-Line Mode #1**	**One-Line Mode #2**
ADC Mode	**Not One-Line Mode**	DAC_SCLK=64Fs DAC_LRCK=SSM/DSM/QSM ADC_SCLK=64Fs ADC_LRCK=SSM/DSM/QSM	DAC_SCLK=128Fs DAC_LRCK=SSM ADC_SCLK=64Fs ADC_LRCK=SSM/DSM/QSM	not valid
	One-Line Mode #1	DAC_SCLK=64Fs DAC_LRCK=SSM/DSM ADC_SCLK=128Fs ADC_LRCK=DAC_LRCK	DAC_SCLK=128Fs DAC_LRCK=SSM ADC_SCLK=128Fs ADC_LRCK=DAC_LRCK	not valid
	One-Line Mode #2	DAC_SCLK=64Fs DAC_LRCK=SSM ADC_SCLK=256Fs ADC_LRCK=DAC_LRCK	not valid	not valid

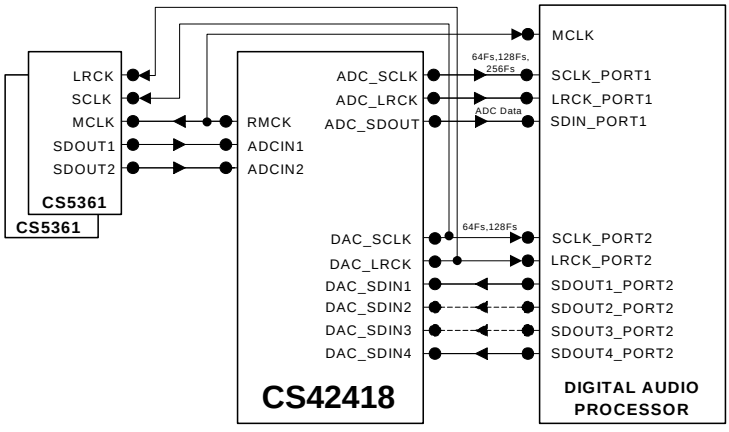

Figure 18. OLM Configuration #2

4.5.4.3 OLM Config #3

This configuration will support up to 8 channels of DAC data and 6 channels of ADC data. OLM Config #3 will handle up to 20-bit ADC samples at an Fs of 48 kHz and 24-bit DAC samples at an Fs of 48 kHz. Since the ADC's data stream is configured to use the ADC_SDOUT output and the internal and external ADCs are clocked from the ADC_SP, the sample rate for the DAC Serial Port can be different from the sample rate of the ADC serial port.

Register / Bit Settings	Description
Functional Mode Register (addr = 03h)	
Set DAC_FMx = 00,01,10	DAC_LRCK can run at SSM, DSM, or QSM independent of ADC_LRCK
Set ADC_FMx = 00,01,10	ADC_LRCK can run at SSM, DSM, or QSM independent of DAC_LRCK
Set ADC_CLK_SEL = 1	Configure ADC_SDOUT to be clocked from the ADC_SP clocks.
Interface Format Register (addr = 04h)	
Set DIFx bits to proper serial format	Select the digital interface format when not in One-Line Mode
Set ADC_OLx bits = 00,01	Select ADC operating mode, see table below for valid combinations
Set DAC_OLx bits = 00,01,10	Select DAC operating mode, see table below for valid combinations
Misc. Control Register (addr = 05h)	
Set DAC_SP M/S = 1	Set DAC Serial Port to Master Mode.
Set ADC_SP M/S = 0 or 1	Set ADC Serial Port to Master Mode or Slave Mode.
Set EXT ADC SCLK = 0	Identify external ADC clock source as ADC Serial Port.

		DAC Mode		
		Not One-Line Mode	**One-Line Mode #1**	**One-Line Mode #2**
ADC Mode	**Not One-Line Mode**	DAC_SCLK=64Fs DAC_LRCK=SSM/DSM/QSM ADC_SCLK=64Fs ADC_LRCK=SSM/DSM/QSM	DAC_SCLK=128Fs DAC_LRCK=SSM/DSM ADC_SCLK=64Fs ADC_LRCK=SSM/DSM/QSM	DAC_SCLK=256Fs DAC_LRCK=SSM ADC_SCLK=64Fs ADC_LRCK=SSM/DSM/QSM
	One-Line Mode #1	DAC_SCLK=64Fs DAC_LRCK=SSM/DSM/QSM ADC_SCLK=128Fs ADC_LRCK=SSM	DAC_SCLK=128Fs DAC_LRCK=SSM/DSM ADC_SCLK=128Fs ADC_LRCK=SSM	DAC_SCLK=256Fs DAC_LRCK=SSM ADC_SCLK=128Fs ADC_LRCK=SSM
	One-Line Mode #2	not valid	not valid	not valid

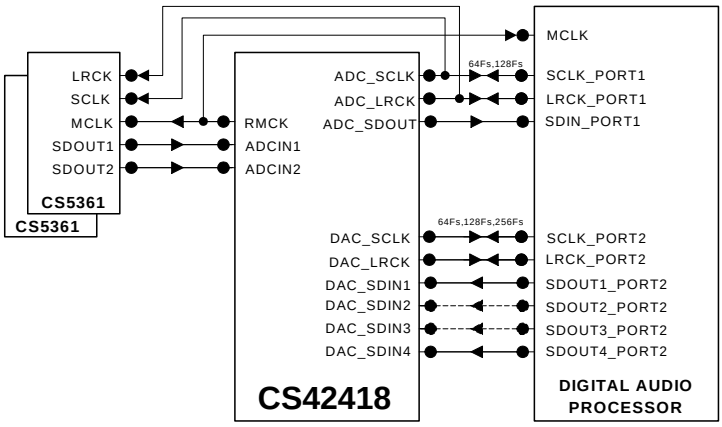

Figure 19. OLM Configuration #3

4.5.4.4 OLM Config #4

This One-Line Mode configuration can support up to 8 channels of DAC data on 2 DAC_SDIN pins and 2 channels of ADC data and will handle up to 24-bit samples at a sampling frequency of 48 kHz on all channels for both the DAC and ADC. The output data stream of the internal ADCs can be configured to run at the DAC_SP clock speeds or to run at the ADC_SP rate. The DAC_SP and ADC_SP can operate at different Fs rates.

Register / Bit Settings	Description
Functional Mode Register (addr = 03h)	
Set DAC_FMx = 00,01,10	DAC_LRCK can run at SSM, DSM, or QSM independent of ADC_LRCK
Set ADC_FMx = 00,01,10	ADC_LRCK can run at SSM, DSM, or QSM independent of DAC_LRCK
Set ADC_CLK_SEL = 0 or 1	Configure ADC_SDOUT to be clocked from the ADC_SP or DAC_SP clocks.
Interface Format Register (addr = 04h)	
Set DIFx bits to proper serial format	Select the digital interface format when not in One-Line Mode
Set ADC_OLx bits = 00	Set ADC operating mode to Not One-Line Mode since only 2 channels of ADC are supported
Set DAC_OLx bits = 00,01,10	Select DAC operating mode, see table below for valid combinations
Misc. Control Register (addr = 05h)	
Set DAC_SP M/S = 0 or 1	Set DAC Serial Port to Master Mode or Slave Mode.
Set ADC_SP M/S = 0 or 1	Set ADC Serial Port to Master Mode or Slave Mode.
Set EXT ADC SCLK = 0	External ADCs are not used. Leave bit in default state.

		DAC Mode		
		Not One-Line Mode	**One-Line Mode #1**	**One-Line Mode #2**
ADC Mode	**Not One-Line Mode**	DAC_SCLK=64Fs/128Fs DAC_LRCK=SSM/DSM/QSM ADC_SCLK=64Fs/128Fs ADC_LRCK=SSM/DSM/QSM	DAC_SCLK=128Fs DAC_LRCK=SSM/DSM ADC_SCLK=64Fs/128Fs ADC_LRCK=SSM/DSM/QSM	DAC_SCLK=256Fs DAC_LRCK=SSM ADC_SCLK=64Fs/128Fs ADC_LRCK=SSM/DSM/QSM
	One-Line Mode #1	not valid	not valid	not valid
	One-Line Mode #2	not valid	not valid	not valid

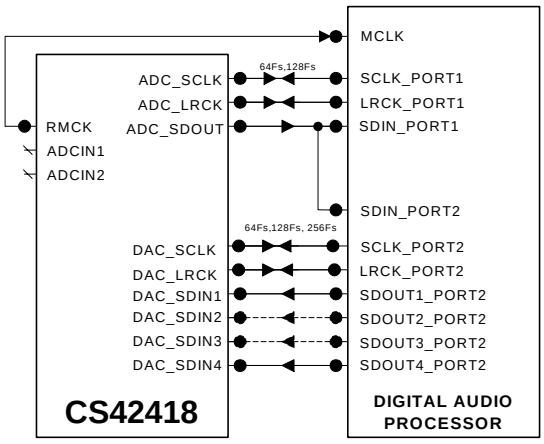

Figure 20. OLM Configuration #4

4.6 Control Port Description and Timing

The control port is used to access the registers, allowing the CS42418 to be configured for the desired operational modes and formats. The operation of the control port may be completely asynchronous with respect to the audio sample rates. However, to avoid potential interference problems, the control port pins should remain static if no operation is required.

The control port has two modes: SPI and I²C, with the CS42418 acting as a slave device. SPI mode is selected if there is a high-to-low transition on the AD0/$\overline{CS}$ pin after the $\overline{RST}$ pin has been brought high. I²C mode is selected by connecting the AD0/$\overline{CS}$ pin through a resistor to VLC or DGND, thereby permanently selecting the desired AD0 bit address state.

4.6.1 SPI Mode

In SPI mode, $\overline{CS}$ is the CS42418 chip-select signal; CCLK is the control port bit clock (input into the CS42418 from the microcontroller); CDIN is the input data line from the microcontroller, and CDOUT is the output data line to the microcontroller. Data is clocked in on the rising edge of CCLK and out on the falling edge.

Figure 21 shows the operation of the control port in SPI mode. To write to a register, bring $\overline{CS}$ low. The first seven bits on CDIN form the chip address and must be 1001111. The eighth bit is a read/write indicator (R/$\overline{W}$), which should be low to write. The next eight bits form the Memory Address Pointer (MAP), which is set to the address of the register that is to be updated. The next eight bits are the data which will be placed into the register designated by the MAP. During writes, the CDOUT output stays in the Hi-Z state. It may be externally pulled high or low with a 47 kΩ resistor, if desired.

There is a MAP auto-increment capability, enabled by the INCR bit in the MAP register. If INCR is a zero, the MAP will stay constant for successive read or writes. If INCR is set to a 1, the MAP will auto-increment after each byte is read or written, allowing block reads or writes of successive registers.

To read a register, the MAP has to be set to the correct address by executing a partial write cycle which finishes ($\overline{CS}$ high) immediately after the MAP byte. The MAP auto increment bit (INCR) may be set or not, as desired. To begin a read, bring $\overline{CS}$ low, send out the chip address and set the read/write bit (R/$\overline{W}$) high. The next falling edge of CCLK will clock out the MSB of the addressed register (CDOUT will leave the high impedance state). If the MAP auto-increment bit is set to 1, the data for successive registers will appear consecutively.

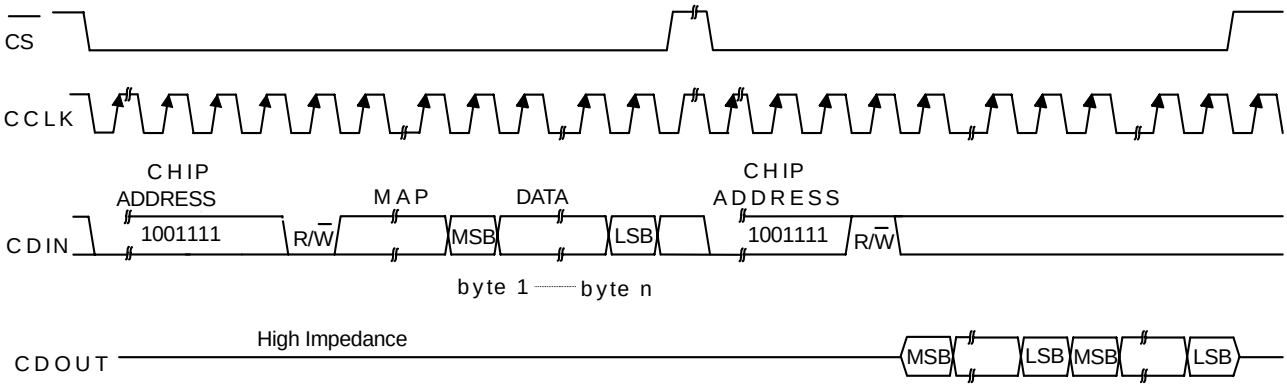

MAP = Memory Address Pointer, 8 bits, MSB first

Figure 21. Control Port Timing in SPI Mode

4.6.2 I²C Mode

In I²C mode, SDA is a bidirectional data line. Data is clocked into and out of the part by the clock, SCL. There is no CS pin. Pins AD0 and AD1 form the two least-significant bits of the chip address and should be connected through a resistor to VLC or DGND as desired. The state of the pins is sensed while the CS42418 is being reset.

The signal timings for a read and write cycle are shown in Figure 22 and Figure 23. A Start condition is defined as a falling transition of SDA while the clock is high. A Stop condition is a rising transition while the clock is high. All other transitions of SDA occur while the clock is low. The first byte sent to the CS42418 after a Start condition consists of a 7-bit chip address field and a R/W bit (high for a read, low for a write). The upper 5 bits of the 7-bit address field are fixed at 10011. To communicate with a CS42418, the chip address field, which is the first byte sent to the CS42418, should match 10011, followed by the settings of the AD1 and AD0. The eighth bit of the address is the R/W bit. If the operation is a write, the next byte is the Memory Address Pointer (MAP) which selects the register to be read or written. If the operation is a read, the contents of the register pointed to by the MAP will be output. Setting the auto-increment bit in MAP allows successive reads or writes of consecutive registers. Each byte is separated by an acknowledge bit. The ACK bit is output from the CS42418 after each input byte is read and is input to the CS42418 from the microcontroller after each transmitted byte.

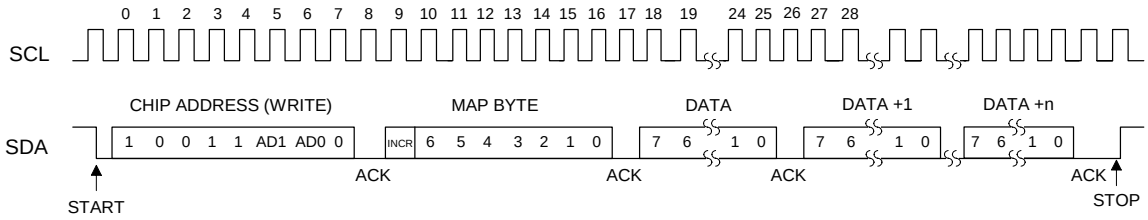

Figure 22. Control Port Timing, I²C Write

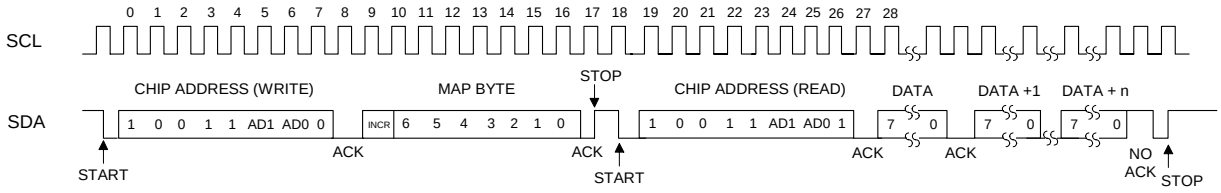

Figure 23. Control Port Timing, I²C Read

Since the read operation cannot set the MAP, an aborted write operation is used as a preamble. As shown in Figure 23, the write operation is aborted after the acknowledge for the MAP byte by sending a stop condition. The following pseudocode illustrates an aborted write operation followed by a read operation.

Send start condition.

Send 10011xx0 (chip address & write operation).

Receive acknowledge bit.

Send MAP byte, auto increment off.

Receive acknowledge bit.

Send stop condition, aborting write.

Send start condition.

Send 10011xx1(chip address & read operation).

Receive acknowledge bit.

Receive byte, contents of selected register.

Send acknowledge bit.

Send stop condition.

Setting the auto increment bit in the MAP allows successive reads or writes of consecutive registers. Each byte is separated by an acknowledge bit.

4.7 Interrupts

The CS42418 has a comprehensive interrupt capability. The INT output pin is intended to drive the interrupt input pin on the host microcontroller. The INT pin may be set to be active low, active high or active low with no active pull-up transistor. This last mode is used for active low, wired-OR hook-ups, with multiple peripherals connected to the microcontroller interrupt input pin.

Many conditions can cause an interrupt, as listed in the interrupt status register descriptions (see "Interrupt Status (address 20h) (Read Only)" on page 56). Each source may be masked off through mask register bits. In addition, each source may be set to rising edge, falling edge, or level-sensitive. Combined with the option of level-sensitive or edge-sensitive modes within the microcontroller, many different configurations are possible, depending on the needs of the equipment designer.

4.8 Reset and Power-Up

Reliable power-up can be accomplished by keeping the device in reset until the power supplies, clocks and configuration pins are stable. It is also recommended that reset be activated if the analog or digital supplies drop below the recommended operating condition to prevent power-glitch-related issues.

When $\overline{\text{RST}}$ is low, the CS42418 enters a low-power mode and all internal states are reset, including the control port and registers, and the outputs are muted. When $\overline{\text{RST}}$ is high, the control port becomes operational, and the desired settings should be loaded into the control registers. Writing a 0 to the PDN bit in the Power Control Register will then cause the part to leave the low-power state and begin operation. If the internal PLL is selected as the clock source, the serial audio outputs will be enabled after the PLL has settled (see "Power Control (address 02h)" on page 43 for more details).

The delta-sigma modulators settle in a matter of microseconds after the analog section is powered, either through the application of power or by setting the $\overline{\text{RST}}$ pin high. However, the voltage reference will take much longer to reach a final value due to the presence of external capacitance on the FILT+ pin. A time delay of approximately 80 ms is required after applying power to the device or after exiting a reset state. During this voltage reference ramp delay, all serial ports and DAC outputs will be automatically muted.

4.9 Power Supply, Grounding, and PCB Layout

As with any high-resolution converter, the CS42418 requires careful attention to power supply and grounding arrangements if its potential performance is to be realized. Figure 5 and 6 show the recommended power arrangements, with VA connected to clean supplies. VD, which powers the digital circuitry, may be run from the system logic supply. Alternatively, VD may be powered from the analog supply via a ferrite bead. In this case, no additional devices should be powered from VD.

For applications where the output of the PLL is required to be low jitter, use a separate, low-noise analog +5 V supply for VA, decoupled to AGND. In addition, a separate region of analog ground plane around the FILT+, VQ, LPFLT, REFGND, AGND, and VA pins is recommended.

Extensive use of power and ground planes, ground plane fill in unused areas and surface mount decoupling capacitors are recommended. Decoupling capacitors should be as near to the pins of the CS42418 as possible. The low value ceramic capacitor should be the nearest to the pin and should be mounted on the same side of the board as the CS42418 to minimize inductance effects. All signals, especially clocks, should be kept away from the FILT+, VQ and LPFLT pins in order to avoid unwanted coupling into the modulators and PLL. The FILT+ and VQ decoupling capacitors, particularly the 0.1 µF, must be positioned to minimize the electrical path from FILT+ and REFGND. The CDB42428 evaluation board demonstrates the optimum layout and power supply arrangements.

5. REGISTER QUICK REFERENCE

Addr	Function	7	6	5	4	3	2	1	0
01h	ID	Chip_ID3	Chip_ID2	Chip_ID1	Chip_ID0	Rev_ID3	Rev_ID2	Rev_ID1	Rev_ID0
	page 42	1	1	1	0	X	X	X	X
	default								
02h	Power Control	Reserved	PDN_PLL	PDN_ADC	PDN_DAC4	PDN_DAC3	PDN_DAC2	PDN_DAC1	PDN
	page 43	0	0	0	0	0	0	0	1
	default								
03h	Functional Mode	DAC_FM1	DAC_FM0	ADC_FM1	ADC_FM0	Reserved	ADC_CLK SEL	DAC_DEM	Reserved
	page 43	0	0	0	0	0	0	0	0
	default								
04h	Interface Formats	DIF1	DIF0	ADC_OL1	ADC_OL0	DAC_OL1	DAC_OL0	Reserved	CODEC_RJ16
	page 45	0	1	0	0	0	0	0	0
	default								
05h	Misc Control	Ext ADC SCLK	HiZ_RMCK	Reserved	FREEZE	FILTSEL	HPF_ FREEZE	DAC_SP M/S	ADC_SP M/S
	page 46	0	0	0	0	0	0	0	0
	default								
06h	Clock Control	RMCK_DIV1	RMCK_DIV0	OMCK Freq1	OMCK Freq0	PLL_LRCK	SW_CTRL1	SW_CTRL0	FRC_PLL_LK
	page 48	0	0	0	0	0	0	0	0
	default								
07h	OMCK/PLL_ CLK Ratio	RATIO7	RATIO6	RATIO5	RATIO4	RATIO3	RATIO2	RATIO1	RATIO0
	page 49	X	X	X	X	X	X	X	X
	default								
08h	Clock Status	Reserved	Reserved	Reserved	Reserved	Active_CLK	PLL_CLK2	PLL_CLK1	PLL_CLK0
	page 50	X	X	X	X	X	X	X	X
	default								
09h-0Ch	Reserved	Reserved	Reserved	Reserved	Reserved	Reserved	Reserved	Reserved	Reserved
	default	X	X	X	X	X	X	X	X
0Dh	Volume Control	Reserved	SNGVOL	SZC1	SZC0	AMUTE	Reserved	RAMP_UP	RAMP_DN
	page 51	0	0	0	0	1	0	0	0
	default								
0Eh	Channel Mute	B4_MUTE	A4_MUTE	B3_MUTE	A3_MUTE	B2_MUTE	A2_MUTE	B1_MUTE	A1_MUTE
	page 52	0	0	0	0	0	0	0	0
	default								
0Fh	Vol. Control A1	A1_VOL7	A1_VOL6	A1_VOL5	A1_VOL4	A1_VOL3	A1_VOL2	A1_VOL1	A1_VOL0
	page 53	0	0	0	0	0	0	0	0
	default								
10h	Vol. Control B1	B1_VOL7	B1_VOL6	B1_VOL5	B1_VOL4	B1_VOL3	B1_VOL2	B1_VOL1	B1_VOL0
	page 53	0	0	0	0	0	0	0	0
	default								
11h	Vol. Control A2	A2_VOL7	A2_VOL6	A2_VOL5	A2_VOL4	A2_VOL3	A2_VOL2	A2_VOL1	A2_VOL0
	page 53	0	0	0	0	0	0	0	0
	default								
12h	Vol. Control B2	B2_VOL7	B2_VOL6	B2_VOL5	B2_VOL4	B2_VOL3	B2_VOL2	B2_VOL1	B2_VOL0
	page 53	0	0	0	0	0	0	0	0
	default								

Addr	Function	7	6	5	4	3	2	1	0
13h	Vol. Control A3	A3_VOL7	A3_VOL6	A3_VOL5	A3_VOL4	A3_VOL3	A3_VOL2	A3_VOL1	A3_VOL0
	page 53 default	0	0	0	0	0	0	0	0
14h	Vol. Control B3	B3_VOL7	B3_VOL6	B3_VOL5	B3_VOL4	B3_VOL3	B3_VOL2	B3_VOL1	B3_VOL0
	page 53 default	0	0	0	0	0	0	0	0
15h	Vol. Control A4	A4_VOL7	A4_VOL6	A4_VOL5	A4_VOL4	A4_VOL3	A4_VOL2	A4_VOL1	A4_VOL0
	page 53 default	0	0	0	0	0	0	0	0
16h	Vol. Control B4	B4_VOL7	B4_VOL6	B4_VOL5	B4_VOL4	B4_VOL3	B4_VOL2	B4_VOL1	B4_VOL0
	page 53 default	0	0	0	0	0	0	0	0
17h	Channel Invert	INV_B4	INV_A4	INV_B3	INV_A3	INV_B2	INV_A2	INV_B1	INV_A1
	page 53 default	0	0	0	0	0	0	0	0
18h	Mixing Ctrl Pair 1	P1_A=B	Reserved	Reserved	P1_ATAPI4	P1_ATAPI3	P1_ATAPI2	P1_ATAPI1	P1_ATAPI0
	page 53 default	0	0	0	0	1	0	0	1
19h	Mixing Ctrl Pair 2	P2_A=B	Reserved	Reserved	P2_ATAPI4	P2_ATAPI3	P2_ATAPI2	P2_ATAPI1	P2_ATAPI0
	page 53 default	0	0	0	0	1	0	0	1
1Ah	Mixing Ctrl Pair 3	P3_A=B	Reserved	Reserved	P3_ATAPI4	P3_ATAPI3	P3_ATAPI2	P3_ATAPI1	P3_ATAPI0
	page 53 default	0	0	0	0	1	0	0	1
1Bh	Mixing Ctrl Pair 4	P4_A=B	Reserved	Reserved	P4_ATAPI4	P4_ATAPI3	P4_ATAPI2	P4_ATAPI1	P4_ATAPI0
	page 53 default	0	0	0	0	1	0	0	1
1Ch	ADC Left Ch. Gain	Reserved	Reserved	LGAIN5	LGAIN4	LGAIN3	LGAIN2	LGAIN1	LGAIN0
	page 55 default	0	0	0	0	0	0	0	0
1Dh	ADC Right Ch. Gain	Reserved	Reserved	RGAIN5	RGAIN4	RGAIN3	RGAIN2	RGAIN1	RGAIN0
	page 55 default	0	0	0	0	0	0	0	0
1Eh	Interrupt Control	SP_SYNC	Reserved	DE-EMPH1	DE-EMPH0	INT1	INT0	Reserved	Reserved
	page 55 default	0	0	0	0	0	0	0	0
1Fh	Reserved	Reserved	Reserved	Reserved	Reserved	Reserved	Reserved	Reserved	Reserved
	default	0	0	0	0	0	0	0	0
20h	Interrupt Status	UNLOCK	Reserved	Reserved	Reserved	Reserved	Reserved	OverFlow	Reserved
	page 56 default	X	X	X	X	X	X	X	X
21h	Interrupt Mask	UNLOCKM	Reserved	Reserved	Reserved	Reserved	Reserved	OverFlowM	Reserved
	page 57 default	0	0	0	0	0	0	0	0
22h	Interrupt Mode MSB	UNLOCK1	Reserved	Reserved	Reserved	Reserved	Reserved	OF1	Reserved
	page 57 default	0	0	0	0	0	0	0	0

Addr	Function	7	6	5	4	3	2	1	0
23h	Interrupt Mode LSB page 57 default	UNLOCK0 0	Reserved 0	Reserved 0	Reserved 0	Reserved 0	Reserved 0	OF0 0	Reserved 0
24h-27h	Reserved default	Reserved 0	Reserved 0	Reserved 0	Reserved 0	Reserved 0	Reserved 0	Reserved 0	Reserved 0
28h	MUTEC page 57 default	Reserved 0	Reserved 0	MCPolarity 0	M_AOUTA1 1	M_AOUTB1 1	M_AOUTA2 M_AOUTB2 1	M_AOUTA3 M_AOUTB3 1	M_AOUTA4 M_AOUTB4 1
29h	GPO7 page 58 default	Mode1 0	Mode0 0	Polarity 0	Function4 0	Function3 0	Function2 0	Function1 0	Function0 0
2Ah	GPO6 page 58 default	Mode1 0	Mode0 0	Polarity 0	Function4 0	Function3 0	Function2 0	Function1 0	Function0 0
2Bh	GPO5 page 58 default	Mode1 0	Mode0 0	Polarity 0	Function4 0	Function3 0	Function2 0	Function1 0	Function0 0
2Ch	GPO4 page 58 default	Mode1 0	Mode0 0	Polarity 0	Function4 0	Function3 0	Function2 0	Function1 0	Function0 0
2Dh	GPO3 page 58 default	Mode1 0	Mode0 0	Polarity 0	Function4 0	Function3 0	Function2 0	Function1 0	Function0 0
2Eh	GPO2 page 58 default	Mode1 0	Mode0 0	Polarity 0	Function4 0	Function3 0	Function2 0	Function1 0	Function0 0
2Fh	GPO1 page 58 default	Mode1 0	Mode0 0	Polarity 0	Function4 0	Function3 0	Function2 0	Function1 0	Function0 0

6. REGISTER DESCRIPTION

All registers are read/write except for the I.D. and Revision Register, OMCK/PLL_CLK Ratio Register, Clock Status and Interrupt Status Register which are read only. See the following bit definition tables for bit assignment information. The default state of each bit after a power-up sequence or reset is listed in each bit description.

6.1 Memory Address Pointer (MAP)

Not a register

7	6	5	4	3	2	1	0
INCR	MAP6	MAP5	MAP4	MAP3	MAP2	MAP1	MAP0

6.1.1 INCREMENT (INCR)

Default = 1
Function:

Memory Address Pointer auto increment control
0 - MAP is not incremented automatically.
1 - Internal MAP is automatically incremented after each read or write.

6.1.2 MEMORY ADDRESS POINTER (MAPX)

Default = 0000001
Function:

Memory Address Pointer (MAP). Sets the register address that will be read or written by the control port.

6.2 Chip I.D. and Revision Register (address 01h) (Read Only)

7	6	5	4	3	2	1	0
Chip_ID3	Chip_ID2	Chip_ID1	CHIP_ID0	Rev_ID3	Rev_ID2	Rev_ID1	Rev_ID0

6.2.1 CHIP I.D. (CHIP_IDX)

Default = 1110
Function:

I.D. code for the CS42418. Permanently set to 1110.

6.2.2 CHIP REVISION (REV_IDX)

Default = xxxx
Function:

CS42418 revision level.

Revision C1 is coded as 0101
Revision C is coded as 0011.

6.3 Power Control (address 02h)

7	6	5	4	3	2	1	0
Reserved	PDN_PLL	PDN_ADC	PDN_DAC4	PDN_DAC3	PDN_DAC2	PDN_DAC1	PDN

6.3.1 POWER DOWN PLL (PDN_PLL)

Default = 0
Function:

When enabled, the PLL is held in a reset state. It is advised that any change of this bit be made while the DACs are muted or the power-down bit (PDN) is enabled to eliminate the possibility of audible artifacts.

6.3.2 POWER DOWN ADC (PDN_ADC)

Default = 0
Function:

When enabled the stereo analog to digital converter will remain in a reset state. It is advised that any change of this bit be made while the DACs are muted or the power-down bit (PDN) is enabled to eliminate the possibility of audible artifacts.

6.3.3 POWER DOWN DAC PAIRS (PDN_DACX)

Default = 0
Function:

When enabled the respective DAC channel pair x (AOUTAx and AOUTBx) will remain in a reset state.

6.3.4 POWER DOWN (PDN)

Default = 1
Function:

The entire device will enter a low-power state when this function is enabled, and the contents of the control registers are retained in this mode. The power-down bit defaults to 'enabled' on power-up and must be disabled before normal operation can occur.

6.4 Functional Mode (address 03h)

7	6	5	4	3	2	1	0
DAC_FM1	DAC_FM0	ADC_FM1	ADC_FM0	Reserved	ADC_SP SEL	DAC_DEM	Reserved

6.4.1 DAC FUNCTIONAL MODE (DAC_FMX)

Default = 00
00 - Single-Speed Mode (4 to 50 kHz sample rates)
01 - Double-Speed Mode (50 to 100 kHz sample rates)
10 - Quad-Speed Mode (100 to 192 kHz sample rates)
11 - Reserved
Function:

Selects the required range of sample rates for all converters clocked from the DAC serial port (DAC_SP). Bits must be set to the corresponding sample rate range when the DAC_SP is in Master or Slave Mode.

6.4.2 ADC FUNCTIONAL MODE (ADC_FMX)

Default = 00
00 - Single-Speed Mode (4 to 50 kHz sample rates)
01 - Double-Speed Mode (50 to 100 kHz sample rates)
10 - Quad-Speed Mode (100 to 192 kHz sample rates)
11 - Reserved
Function:

Selects the required range of sample rates for the ADC serial port (ADC_SP). These bits must be set to the corresponding sample rate range when the ADC_SP is in Master or Slave Mode.

6.4.3 ADC CLOCK SOURCE SELECT (ADC_CLK SEL)

Default = 0
0 - ADC_SDOUT clocked from the DAC_SP.
1 - ADC_SDOUT clocked from the ADC_SP.
Function:

Selects the desired clocks for the ADC serial output.

6.4.4 DAC DE-EMPHASIS CONTROL (DAC_DEM)

Default = 0
Function:

Enables the digital filter to maintain the standard 15µs/50µs digital de-emphasis filter response at the auto-detected sample rate of either 32, 44.1, or 48 kHz. De-emphasis will not be enabled, regardless of this register setting, at any other sample rate. If the FRC_PLL_LK bit is set to a ‘1’b, the auto-detect sample rate feature is disabled. To apply the correct de-emphasis filter, use the DE-EMPH bits in the Interrupt Control (address 1Eh) register to set the appropriate sample rate.

DAC_DEM reg03h[1]	FRC_PLL_LK reg06h[0]	DE-EMPH[1:0] reg1Eh[5:4]	De-Emphasis Mode
0	X	XX	No De-Emphasis
1	0	XX	Auto-Detect Fs
1	1	00 01 10 11	Reserved 32 kHz 44.1 kHz 48 kHz

Table 5. DAC De-Emphasis

6.5 Interface Formats (address 04h)

7	6	5	4	3	2	1	0
DIF1	DIF0	ADC_OL1	ADC_OL0	DAC_OL1	DAC_OL0	Reserved	CODEC_RJ16

6.5.1 DIGITAL INTERFACE FORMAT (DIFX)

Default = 01
Function:

These bits select the digital interface format used for the ADC & DAC Serial Port when not in One-Line Mode. The required relationship between the Left/Right clock, serial clock, and serial data is defined by the Digital Interface Format and the options are detailed in Figures 11-13.

DIF1	DIF0	Description	Format	Figure
0	0	Left-Justified, up to 24-bit data	0	13
0	1	I²S, up to 24-bit data	1	12
1	0	Right-Justified, 16-bit or 24-bit data	2	11
1	1	Reserved	-	-

Table 6. Digital Interface Formats

6.5.2 ADC ONE_LINE MODE (ADC_OLX)

Default = 00
Function:

These bits select which mode the ADC will use. By default, One-Line Mode is disabled, but it can be selected using these bits. Please see Figures 14 and 15 to see the format of One-Line Mode 1 and One-Line Mode 2.

ADC_OL1	ADC_OL0	Description	Format	Figure
0	0	DIF: take the DIF setting from reg04h[7:6]	-	-
0	1	One-Line #1	3	14
1	0	One-Line #2	4	15
1	1	Reserved	-	-

Table 7. ADC One-Line Mode

6.5.3 DAC ONE_LINE MODE (DAC_OLX)

Default = 00
Function:

These bits select which mode the DAC will use. By default, One-Line Mode is disabled, but it can be selected using these bits. Please see Figures 14 and 15 to see the format of One-Line Mode 1 and One-Line Mode 2.

DAC_OL1	DAC_OL0	Description	Format	Figure
0	0	DIF: take the DIF setting from reg04h[7:6]	-	-
0	1	One-Line #1	3	14
1	0	One-Line #2	4	15
1	1	Reserved	-	-

Table 8. DAC One-Line Mode

6.5.4 CODEC RIGHT-JUSTIFIED BITS (CODEC_RJ16)

Default = 0
Function:

This bit determines how many bits to use during Right-Justified Mode for the DAC and ADC. By default, the DAC and ADC will be in RJ24 bits, but can be set to RJ16 bits.

0 - 24 bit mode.
1 - 16 bit mode.

6.6 Misc Control (address 05h)

7	6	5	4	3	2	1	0
Ext ADC SCLK	HiZ_RMCK	Reserved	FREEZE	FILT_SEL	HPF_FREEZE	DAC_SP M/S	ADC_SP M/S

6.6.1 EXTERNAL ADC SCLK SELECT (EXT ADC SCLK)

Default = 0
Function:

This bit identifies the SCLK source for the external ADCs attached to the ADCIN1/2 ports when using One-Line Mode of operation.

0 - ADC_SCLK is used as external ADC SCLK.
1 - DAC_SCLK is used as external ADC SCLK.

6.6.2 RMCK HIGH IMPEDANCE (HIZ_RMCK)

Default = 0
Function:

This bit is used to create a high-impedance output on RMCK when the clock signal is not required.

6.6.3 FREEZE CONTROLS (FREEZE)

Default = 0
Function:

This function will freeze the previous output of, and allow modifications to be made to, the Volume Control (address 0Fh-16h), Channel Invert (address 17h), and Mixing Control Pair (address 18h-1Bh) registers without the changes taking effect until the FREEZE is disabled. To make multiple changes in these control port registers take effect simultaneously, enable the FREEZE bit, make all register changes, then disable the FREEZE bit.

6.6.4 INTERPOLATION FILTER SELECT (FILT_SEL)

Default = 0
Function:

This feature allows the user to select whether the DAC interpolation filter has a fast- or slow roll-off. For filter characteristics, please See "D/A Digital Filter Characteristics" on page 10.

0 - Fast roll-off.
1 - Slow roll-off.

6.6.5 HIGH-PASS FILTER FREEZE (HPF_FREEZE)

Default = 0
Function:

When this bit is set, the internal high-pass filter for the selected channel will be disabled. The current DC offset value will be frozen and continue to be subtracted from the conversion result. See "A/D Digital Filter Characteristics" on page 8.

6.6.6 DAC SERIAL PORT MASTER/SLAVE SELECT (DAC_SP M/$\overline{S}$)

Default = 0
Function:

In Master Mode, DAC_SCLK and DAC_LRCK are outputs. Internal dividers will divide the master clock to generate the serial clock and left/right clock. In Slave Mode, DAC_SCLK and DAC_LRCK become inputs.

If the DAC_SP is in Slave Mode, DAC_LRCK must be present for proper device operation.

6.6.7 ADC SERIAL PORT MASTER/SLAVE SELECT (ADC_SP M/$\overline{S}$)

Default = 0
Function:

In Master Mode, ADC_SCLK and ADC_LRCK are outputs. Internal dividers will divide the master clock to generate the serial clock and left/right clock. In Slave Mode, ADC_SCLK and ADC_LRCK become inputs.

If the ADC_SP is in Slave Mode, ADC_LRCK must be present for proper device operation.

To use the PLL to lock to ADC_LRCK, the ADC_SP must be in Slave Mode. When using the PLL to lock to LRCK, if ADC_SDOUT is configured to be clocked by the ADC_SP, both ADC_SCLK and ADC_LRCK must be present. If ADC_SDOUT is configured to be clocked by the DAC_SP, only the ADC_LRCK signal must be applied.

6.7 Clock Control (address 06h)

7	6	5	4	3	2	1	0
RMCK_DIV1	RMCK_DIV0	OMCK Freq1	OMCK Freq0	PLL_LRCK	SW_CTRL1	SW_CTRL0	FRC_PLL_LK

6.7.1 RMCK DIVIDE (RMCK_DIVX)

Default = 00
Function:

Divides/multiplies the internal MCLK, either from the PLL or OMCK, by the selected factor.

RMCK_DIV1	RMCK_DIV0	Description
0	0	Divide by 1
0	1	Divide by 2
1	0	Divide by 4
1	1	Multiply by 2

Table 9. RMCK Divider Settings

6.7.2 OMCK FREQUENCY (OMCK FREQX)

Default = 00
Function:

Sets the appropriate frequency for the supplied OMCK.

OMCK Freq1	OMCK Freq0	Description
0	0	11.2896 MHz or 12.2880 MHz
0	1	16.9344 MHz or 18.4320 MHz
1	0	22.5792 MHz or 24.5760 MHz
1	1	Reserved

Table 10. OMCK Frequency Settings

6.7.3 PLL LOCK TO LRCK (PLL_LRCK)

Default = 0
0 - Disabled
1 - Enabled
Function:

When enabled, the internal PLL of the CS42418 will lock to the ADC_LRCK of the ADC serial port (ADC_LRCK) while the ADC_SP is in Slave Mode.

6.7.4 MASTER CLOCK SOURCE SELECT (SW_CTRLX)

Default = 00
Function:

These two bits, along with the UNLOCK bit in register "Interrupt Status (address 20h) (Read Only)" on page 56, determine the master clock source for the CS42418. When SW_CTRL1 and SW_CTRL0 are set to '00'b, selecting the output of the PLL as the internal clock source, and the PLL becomes unlocked, RMCK will equal OMCK, but all internal and serial port timings are not valid.

When the FRC_PLL_LK bit is set to '1'b, the SW_CTRLX bits must be set to '00'b. If the PLL becomes unlocked when the FRC_PLL_LK bit is set to '1'b, RMCK will not equal OMCK.

SW_CTRL1	SW_CTRL0	UNLOCK	Description
0	0	X	Manual setting, MCLK sourced from PLL.
0	1	X	Manual setting, MCLK sourced from OMCK.
1	0	0 1	Hold, keep same MCLK source.Auto switch, MCLK sourced from OMCK.
1	1	0 1	Auto switch, MCLK sourced from PLL. Auto switch, MCLK sourced from OMCK.

Table 11. Master Clock Source Select

6.7.5 FORCE PLL LOCK (FRC_PLL_LK)

Default = 0
Function:

This bit is used to enable the PLL to lock to the ADC_LRCK with the absence of a clock signal on OMCK. When set to a '1'b, the auto-detect sample frequency feature will be disabled and the SW_CTRLX bits must be set to '00'b. The OMCK/PLL_CLK Ratio (address 07h) (Read Only) register contents are not valid, and the PLL_CLK[2:0] bits will be set to '111'b. Use the DE-EMPH[1:0] bits to properly apply de-emphasis filtering.

6.8 OMCK/PLL_CLK Ratio (address 07h) (Read Only)

7	6	5	4	3	2	1	0
RATIO7(2^1)	RATIO6(2^0)	RATIO5(2^{-1})	RATIO4(2^{-2})	RATIO3(2^{-3})	RATIO2(2^{-4})	RATIO1(2^{-5})	RATIO0(2^{-6})

6.8.1 OMCK/PLL_CLK RATIO (RATIOX)

Default = xxxxxxxx
Function:

This register allows the user to find the exact absolute frequency of the recovered MCLK coming from the PLL. This value is represented as an integer (RATIO7:6) and a fractional (RATIO5:0) part. For example, an OMCK/PLL_CLK ratio of 1.5 would be displayed as 60h.

6.9 Clock Status (address 08h) (Read Only)

7	6	5	4	3	2	1	0
Reserved	Reserved	Reserved	Reserved	Active_CLK	PLL_CLK2	PLL_CLK1	PLL_CLK0

6.9.1 SYSTEM CLOCK SELECTION (ACTIVE_CLK)

Default = x
0 - Output of PLL
1 - OMCK
Function:

This bit identifies the source of the internal system clock (MCLK).

6.9.2 PLL CLOCK FREQUENCY (PLL_CLKX)

Default = xxx
Function:

The CS42418 detects the ratio between the OMCK and the recovered clock from the PLL. Given the absolute frequency of OMCK, this ratio may be used to determine the absolute frequency of the PLL clock.

If a 12.2880 MHz, 18.4320 MHz, or 24.5760 MHz clock is applied to OMCK and the OMCK_FREQX bits are set accordingly (see "OMCK Frequency (OMCK Freqx)" on page 48), the absolute frequency of the PLL clock is reflected in the PLL_CLKX bits according to Table 14. If the absolute frequency of the PLL clock does not match one of the frequencies given in Table 14, these bits will reflect the closest available value.

If the frequency of OMCK is not equal to 12.2880 MHz, 18.4320 MHz, or 24.5760 MHz, the contents of the PLL_CLKX bits will be inaccurate and should be disregarded. In this case, an external controller may use the contents of the OMCK/PLL_CLK ratio register and the known OMCK frequency to determine the absolute frequency of the PLL clock.

Note: These bits are set to '111'b when the FRC_PLL_LK bit is '1'b.

PLL_CLK2	PLL_CLK1	PLL_CLK0	Description
0	0	0	8.1920 MHz
0	0	1	11.2896 MHz
0	1	0	12.288 MHz
0	1	1	16.3840 MHz
1	0	0	22.5792 MHz
1	0	1	24.5760 MHz
1	1	0	45.1584 MHz
1	1	1	49.1520 MHz

Table 12. PLL Clock Frequency Detection

6.10 Volume Transition Control (address 0Dh)

7	6	5	4	3	2	1	0
Reserved	SNGVOL	SZC1	SZC0	AMUTE	MUTE ADC_SP	RAMP_UP	RAMP_DN

6.10.1 SINGLE VOLUME CONTROL (SNGVOL)

Default = 0
Function:

The individual channel volume levels are independently controlled by their respective Volume Control registers when this function is disabled. When enabled, the volume on all channels is determined by the A1 Channel Volume Control register and the other Volume Control registers are ignored.

6.10.2 SOFT RAMP AND ZERO CROSS CONTROL (SZCX)

Default = 00
00 - Immediate Change
01 - Zero Cross
10 - Soft Ramp
11 - Soft Ramp on Zero Crossings
Function:

Immediate Change

When Immediate Change is selected, all level changes will take effect immediately in one step.

Zero Cross

Zero Cross Enable dictates that signal-level changes, either by attenuation changes or muting, will occur on a signal zero crossing to minimize audible artifacts. The requested level-change will occur after a timeout period between 512 and 1024 sample periods (10.7 ms to 21.3 ms at 48 kHz sample rate) if the signal does not encounter a zero crossing. The zero cross function is independently monitored and implemented for each channel.

Soft Ramp

Soft Ramp allows level changes, both muting and attenuation, to be implemented by incrementally ramping, in 1/8 dB steps, from the current level to the new level at a rate of 1 dB per 8 left/right clock periods.

Soft Ramp on Zero Crossing

Soft Ramp and Zero Cross Enable dictates that signal level changes, either by attenuation changes or muting, will occur in 1/8 dB steps and be implemented on a signal zero crossing. The 1/8 dB level change will occur after a timeout period between 512 and 1024 sample periods (10.7 ms to 21.3 ms at 48 kHz sample rate) if the signal does not encounter a zero crossing. The zero cross function is independently monitored and implemented for each channel.

6.10.3 AUTO-MUTE (AMUTE)

Default = 1
0 - Disabled
1 - Enabled
Function:

The digital-to-analog converters of the CS42418 will mute the output following the reception of 8192 consecutive audio samples of static 0 or -1. A single sample of non-static data will release the mute. Detection and muting is done independently for each channel. The quiescent voltage on the output will be retained, and the MUTEC pin will go active during the mute period. The muting function is affected, similar to volume control changes, by the Soft and Zero Cross bits (SZC[1:0]).

6.10.4 SOFT VOLUME RAMP-UP AFTER ERROR (RMP_UP)

Default = 0
0 - Disabled
1 - Enabled
Function:

An un-mute will be performed after executing a filter mode change, after a MCLK/LRCK ratio change or error, and after changing the Functional Mode. When this feature is enabled, this un-mute is affected, similar to attenuation changes, by the Soft and Zero Cross bits (SZC[1:0]). When disabled, an immediate un-mute is performed in these instances.

Note: For best results, it is recommended that this bit be used in conjunction with the RMP_DN bit.

6.10.5 SOFT RAMP-DOWN BEFORE FILTER MODE CHANGE (RMP_DN)

Default = 0
0 - Disabled
1 - Enabled
Function:

A mute will be performed prior to executing a filter mode or de-emphasis mode change. When this feature is enabled, this mute is affected, similar to attenuation changes, by the Soft and Zero Cross bits (SZC[1:0]). When disabled, an immediate mute is performed prior to executing a filter mode or de-emphasis mode change.

Note: For best results, it is recommended that this bit be used in conjunction with the RMP_UP bit.

6.11 Channel Mute (address 0Eh)

7	6	5	4	3	2	1	0
B4_MUTE	A4_MUTE	B3_MUTE	A3_MUTE	B2_MUTE	A2_MUTE	B1_MUTE	A1_MUTE

6.11.1 INDEPENDENT CHANNEL MUTE (XX_MUTE)

Default = 0
0 - Disabled
1 - Enabled
Function:

The digital-to-analog converter outputs of the CS42418 will mute when enabled. The quiescent voltage on the outputs will be retained. The muting function is affected, similar to attenuation changes, by the Soft and Zero Cross bits (SZC[1:0]).

6.12 Volume Control (addresses 0Fh, 10h, 11h, 12h, 13h, 14h, 15h, 16h)

7	6	5	4	3	2	1	0
xx_VOL7	xx_VOL6	xx_VOL5	xx_VOL4	xx_VOL3	xx_VOL2	xx_VOL1	xx_VOL0

6.12.1 VOLUME CONTROL (XX_VOL)

Default = 0
Function:

The Digital Volume Control registers allow independent control of the signal levels in 0.5 dB increments from 0 to -127 dB. Volume settings are decoded as shown in Table 13. The volume changes are implemented as dictated by the Soft and Zero Cross bits (SZC[1:0]). All volume settings less than -127 dB are equivalent to enabling the MUTE bit for the given channel.

Binary Code	Decimal Value	Volume Setting
00000000	0	0 dB
00101000	40	-20 dB
01010000	80	-40 dB
01111000	120	-60 dB
10110100	180	-90 dB

Table 13. Example Digital Volume Settings

6.13 Channel Invert (address 17h)

7	6	5	4	3	2	1	0
INV_B4	INV_A4	INV_B3	INV_A3	INV_B2	INV_A2	INV_B1	INV_A1

6.13.1 INVERT SIGNAL POLARITY (INV_XX)

Default = 0
0 - Disabled
1 - Enabled
Function:

When enabled, these bits will invert the signal polarity of their respective channels.

6.14 Mixing Control Pair 1 (Channels A1 & B1)(address 18h)
Mixing Control Pair 2 (Channels A2 & B2)(address 19h)
Mixing Control Pair 3 (Channels A3 & B3)(address 1Ah)
Mixing Control Pair 4 (Channels A4 & B4)(address 1Bh)

7	6	5	4	3	2	1	0
Px_A=B	Reserved	Reserved	Px_ATAPI4	Px_ATAPI3	Px_ATAPI2	Px_ATAPI1	Px_ATAPI0

6.14.1 CHANNEL A VOLUME = CHANNEL B VOLUME (PX_A=B)

Default = 0
0 - Disabled
1 - Enabled
Function:

The AOUTAx and AOUTBx volume levels are independently controlled by the A and the B Channel Volume Control registers when this function is disabled. The volume on both AOUTAx and AOUTBx are determined by the A Channel Volume Control registers (per A-B pair), and the B Channel Volume Control registers are ignored when this function is enabled.

6.14.2 ATAPI CHANNEL-MIXING AND MUTING (PX_ATAPIX)

Default = 01001

Function:

The CS42418 implements the channel-mixing functions of the ATAPI CD-ROM specification. The ATAPI functions are applied per A-B pair. Refer to Table 14 and Figure 9 for additional information.

ATAPI4	ATAPI3	ATAPI2	ATAPI1	ATAPI0	AOUTAx	AOUTBx
0	0	0	0	0	MUTE	MUTE
0	0	0	0	1	MUTE	bR
0	0	0	1	0	MUTE	bL
0	0	0	1	1	MUTE	b[(L+R)/2]
0	0	1	0	0	aR	MUTE
0	0	1	0	1	aR	bR
0	0	1	1	0	aR	bL
0	0	1	1	1	aR	b[(L+R)/2]
0	1	0	0	0	aL	MUTE
0	1	0	0	1	aL	bR
0	1	0	1	0	aL	bL
0	1	0	1	1	aL	b[(L+R)/2]
0	1	1	0	0	a[(L+R)/2]	MUTE
0	1	1	0	1	a[(L+R)/2]	bR
0	1	1	1	0	a[(L+R)/2]	bL
0	1	1	1	1	a[(L+R)/2]	b[(L+R)/2]
1	0	0	0	0	MUTE	MUTE
1	0	0	0	1	MUTE	bR
1	0	0	1	0	MUTE	bL
1	0	0	1	1	MUTE	[(aL+bR)/2]
1	0	1	0	0	aR	MUTE
1	0	1	0	1	aR	bR
1	0	1	1	0	aR	bL
1	0	1	1	1	aR	[(bL+aR)/2]
1	1	0	0	0	aL	MUTE
1	1	0	0	1	aL	bR
1	1	0	1	0	aL	bL
1	1	0	1	1	aL	[(aL+bR)/2]
1	1	1	0	0	[(aL+bR)/2]	MUTE
1	1	1	0	1	[(aL+bR)/2]	bR
1	1	1	1	0	[(bL+aR)/2]	bL
1	1	1	1	1	[(aL+bR)/2]	[(aL+bR)/2]

Table 14. ATAPI Decode

6.15 ADC Left Channel Gain (address 1Ch)

7	6	5	4	3	2	1	0
Reserved	Reserved	LGAIN5	LGAIN4	LGAIN3	LGAIN2	LGAIN1	LGAIN0

6.15.1 ADC LEFT CHANNEL GAIN (LGAINX)

Default = 00h
Function:

The level of the left analog channel can be adjusted in 1 dB increments as dictated by the Soft and Zero Cross bits (SZC[1:0]) from +15 to -15 dB. Levels are decoded in two's complement, as shown in Table 15.

6.16 ADC Right Channel Gain (address 1Dh)

7	6	5	4	3	2	1	0
Reserved	Reserved	RGAIN5	RGAIN4	RGAIN3	RGAIN2	RGAIN1	RGAIN0

6.16.1 ADC RIGHT CHANNEL GAIN (RGAINX)

Default = 00h
Function:

The level of the right analog channel can be adjusted in 1 dB increments as dictated by the Soft and Zero Cross bits (SZC[1:0]) from +15 to -15 dB. Levels are decoded in two's complement, as shown in Table 15.

Binary Code	Decimal Value	Volume Setting
001111	+15	+15 dB
001010	+10	+10 dB
000101	+5	+5 dB
000000	0	0 dB
111011	-5	-5 dB
110110	-10	-10 dB
110001	-15	-15 dB

Table 15. Example ADC Input Gain Settings

6.17 Interrupt Control (address 1Eh)

7	6	5	4	3	2	1	0
SP_SYNC	Reserved	DE-EMPH1	DE-EMPH0	INT1	INT0	Reserved	Reserved

6.17.1 SERIAL PORT SYNCHRONIZATION (SP_SYNC)

Default = 0
0 - DAC & ADC Serial Port timings not in phase
1 - DAC & ADC Serial Port timings are in phase
Function:

Forces the LRCK and SCLK from the *DAC & ADC* Serial Ports to align and operate in phase. This function will operate when both ports are running at the same sample rate or when operating at different sample rates.

6.17.2 DE-EMPHASIS SELECT BITS (DE-EMPHX)

Default = 00
00 - Reserved
01 - De-Emphasis for 32 kHz sample rate.
10 - De-Emphasis for 44.1 kHz sample rate.
11 - De-Emphasis for 48 kHz sample rate.
Function:

Used to specify which de-emphasis filter to apply when the “Force PLL Lock (FRC_PLL_LK)” on page 49 is enabled.

6.17.3 INTERRUPT PIN CONTROL (INTX)

Default = 00
00 - Active high; high output indicates interrupt condition has occurred
01 - Active low; low output indicates an interrupt condition has occurred
10 - Open drain, active low. Requires an external pull-up resistor on the INT pin.
11 - Reserved
Function:

Determines how the interrupt pin (INT) will indicate an interrupt condition.

6.18 Interrupt Status (address 20h) (Read Only)

7	6	5	4	3	2	1	0
UNLOCK	Reserved	Reserved	Reserved	Reserved	Reserved	OverFlow	Reserved

For all bits in this register, a “1” means the associated interrupt condition has occurred at least once since the register was last read. A ”0” means the associated interrupt condition has NOT occurred since the last reading of the register. Reading the register resets all bits to 0. Status bits that are masked off in the associated mask register will always be “0” in this register.

6.18.1 PLL UNLOCK (UNLOCK)

Default = 0
Function:

PLL unlock status bit. This bit will go high if the PLL becomes unlocked.

6.18.2 ADC OVERFLOW (OVERFLOW)

Default = 0
Function:

Indicates that there is an over-range condition anywhere in the CS42418 ADC signal path.

6.19 Interrupt Mask (address 21h)

7	6	5	4	3	2	1	0
UNLOCKM	Reserved	Reserved	Reserved	Reserved	Reserved	OverFlowM	Reserved

Default = 00000000
Function:

The bits of this register serve as a mask for the interrupt sources found in the register "Interrupt Status (address 20h) (Read Only)" on page 56. If a mask bit is set to 1, the error is unmasked, meaning that its occurrence will affect the INT pin and the status register. If a mask bit is set to 0, the error is masked, meaning that its occurrence will not affect the INT pin or the status register. The bit positions align with the corresponding bits in the Interrupt Status register.

6.20 Interrupt Mode MSB (address 22h)
Interrupt Mode LSB (address 23h)

7	6	5	4	3	2	1	0
UNLOCK1	Reserved	Reserved	Reserved	Reserved	Reserved	OF1	Reserved
UNLOCK0	Reserved	Reserved	Reserved	Reserved	Reserved	OF0	Reserved

Default = 00000000
Function:

The two Interrupt Mode registers form a 2-bit code for each Interrupt Status register function. There are three ways to set the INT pin active in accordance with the interrupt condition. In the Rising edge active mode, the INT pin becomes active on the arrival of the interrupt condition. In the Falling edge active mode, the INT pin becomes active on the removal of the interrupt condition. In Level active mode, the INT interrupt pin becomes active during the interrupt condition. Be aware that the active level (Active High or Low) only depends on the INT(1:0) bits located in the register "Interrupt Control (address 1Eh)" on page 55.

00 - Rising edge active
01 - Falling edge active
10 - Level active
11 - Reserved

6.21 Mutec Pin Control (address 28h)

7	6	5	4	3	2	1	0
Reserved	Reserved	MCPolarity	M_AOUTA1	M_AOUTB1	M_AOUTA2 M_AOUTB2	M_AOUTA3 M_AOUTB3	M_AOUTA4 M_AOUTB4

6.21.1 MUTEC POLARITY SELECT (MCPOLARITY)

Default = 0
0 - Active low
1 - Active high
Function:

Determines the polarity of the MUTEC pin.

6.21.2 CHANNEL MUTES SELECT (M_AOUTXX)

Default = 11111
0 - Channel mute is not mapped to the MUTEC pin
1 - Channel mute is mapped to the MUTEC pin
Function:

Determines which channel mutes will be mapped to the MUTEC pin. If no channel mute bits are mapped, then the MUTEC pin is driven to the "active" state as defined by the POLARITY bit. These Channel Mute Select bits are "ANDed" together in order for the MUTEC pin to go active. This means that if multiple Channel Mutes are selected to be mapped to the MUTEC pin, all corresponding channels must be muted before the MUTEC will go active.

6.22 General-Purpose Pin Control (addresses 29h to 2Fh)

7	6	5	4	3	2	1	0
Mode1	Mode0	Polarity	Function4	Function3	Function2	Function1	Function0

6.22.1 MODE CONTROL (MODEX)

Default = 00
00 - Reserved
01 - Mute Mode
10 - GPO/Overflow Mode
11 - GPO, Drive High Mode
Function:

Mute Mode - The pin is configured as a dedicated mute pin. The muting function is controlled by the Function bits.

GPO, Drive Low / ADC Overflow Mode - The pin is configured as a general-purpose output driven low or as a dedicated ADC overflow pin indicating an over-range condition anywhere in the ADC signal path for either the left or right channel. The Functionx bits determine the operation of the pin. When configured as a GPO with the output driven low, the driver is a CMOS driver. When configured to identify an ADC Overflow condition, the driver is an open drain driver requiring a pull-up resistor.

GPO, Drive High Mode - The pin is configured as a general purpose output driven high.

6.22.2 POLARITY SELECT (POLARITY)

Default = 0
Function:

Mute Mode - If the pin is configured as a dedicated mute output pin, the polarity bit determines the polarity of the mapped pin according to the following

0 - Active low
1 - Active high

GPO, Drive Low / ADC Overflow Mode - If the pin is configured as a GPO, Drive Low / ADC Overflow Mode pin, the polarity bit is ignored. It is recommended that in this mode this bit be set to 0.

GPO, Drive High - If the pin is configured as a general-purpose output driven high, the polarity bit is ignored. It is recommended that in this mode this bit be set to 0.

6.22.3 FUNCTIONAL CONTROL (FUNCTIONX)

Default = 00000
Function:

Mute Mode - If the pin is configured as a dedicated mute pin, the functional bits determine which channel mutes will be mapped to this pin according to the following table.

0 - Channel mute is not mapped to the GPOx pin
1 - Channel mute is mapped to the GPOx pin:

GPOx	Reg Address	Function4	Function3	Function2	Function1	Function0
GPO7 pin 42	29h	M_AOUTA1	M_AOUTB1	M_AOUTA2 M_AOUTB2	M_AOUTA3 M_AOUTB3	M_AOUTA4 M_AOUTB4
GPO6 pin 43	2Ah	M_AOUTA1 M_AOUTB1	M_AOUTA2	M_AOUTB2	M_AOUTA3 M_AOUTB3	M_AOUTA4 M_AOUTB4
GPO5 pin 44	2Bh	M_AOUTA1 M_AOUTB1	M_AOUTA2	M_AOUTB2	M_AOUTA3 M_AOUTB3	M_AOUTA4 M_AOUTB4
GPO4 pin 45	2Ch	M_AOUTA1 M_AOUTB1	M_AOUTA2 M_AOUTB2	M_AOUTA3	M_AOUTB3	M_AOUTA4 M_AOUTB4
GPO3 pin 46	2Dh	M_AOUTA1 M_AOUTB1	M_AOUTA2 M_AOUTB2	M_AOUTA3	M_AOUTB3	M_AOUTA4 M_AOUTB4
GPO2 pin 47	2Eh	M_AOUTA1 M_AOUTB1	M_AOUTA2 M_AOUTB2	M_AOUTA3 M_AOUTB3	M_AOUTA4	M_AOUTB4
GPO1 pin 48	2Fh	M_AOUTA1 M_AOUTB1	M_AOUTA2 M_AOUTB2	M_AOUTA3 M_AOUTB3	M_AOUTA4	M_AOUTB4

GPO, Drive Low / ADC Overflow Mode - If the pin is configured as a GPO, Drive Low / ADC Overflow Mode pin, the Function1 and Function0 bits determine how the output will behave according to the following table. It is recommended that in this mode the remaining functional bits be set to 0.

Function1	Function0	GPOx	Driver Type
0	0	Drive Low	CMOS
1	1	OVFL R or L	Open Drain

GPO, Drive High - If the pin is configured as a general-purpose output, the functional bits are ignored and the pin is driven high. It is recommended that in this mode all the functional bits be set to 0.

7. PARAMETER DEFINITIONS

Dynamic Range

The ratio of the rms value of the signal to the rms sum of all other spectral components over the specified bandwidth. Dynamic Range is a signal-to-noise ratio measurement over the specified band width made with a -60 dBFS signal. 60 dB is added to resulting measurement to refer the measurement to full-scale. This technique ensures that the distortion components are below the noise level and do not effect the measurement. This measurement technique has been accepted by the Audio Engineering Society, AES17-1991, and the Electronic Industries Association of Japan, EIAJ CP-307. Expressed in decibels.

Total Harmonic Distortion + Noise

The ratio of the rms value of the signal to the rms sum of all other spectral components over the specified band width (typically 10 Hz to 20 kHz), including distortion components. Expressed in decibels. Measured at -1 and -20 dBFS as suggested in AES17-1991 Annex A.

Frequency Response

A measure of the amplitude response variation from 10 Hz to 20 kHz relative to the amplitude response at 1 kHz. Units in decibels.

Interchannel Isolation

A measure of crosstalk between the left and right channels. Measured for each channel at the converter's output with no signal to the input under test and a full-scale signal applied to the other channel. Units in decibels.

Interchannel Gain Mismatch

The gain difference between left and right channels. Units in decibels.

Gain Error

The deviation from the nominal full-scale analog output for a full-scale digital input.

Gain Drift

The change in gain value with temperature. Units in ppm/°C.

Offset Error

The deviation of the mid-scale transition (111...111 to 000...000) from the ideal. Units in mV.

8. APPENDIX A: EXTERNAL FILTERS

8.1 ADC Input Filter

The analog modulator samples the input at 6.144 MHz (internal MCLK=12.288 MHz). The digital filter will reject signals within the stopband of the filter. However, there is no rejection for input signals which are (n × 6.144 MHz) the digital passband frequency, where n=0,1,2,... Refer to Figure 24 for a recommended analog input buffer that will attenuate any noise energy at 6.144 MHz, in addition to providing the optimum source impedance for the modulators. The use of capacitors that have a large voltage coefficient (such as general-purpose ceramics) must be avoided since these can degrade signal linearity.

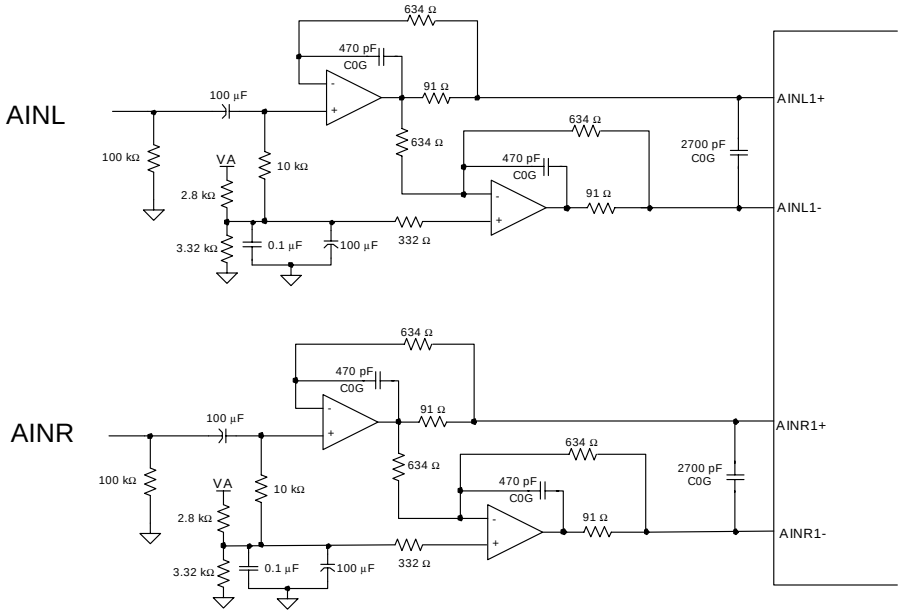

Figure 24. Recommended Analog Input Buffer

8.2 DAC Output Filter

The CS42418 is a linear phase design and does not include phase or amplitude compensation for an external filter. Therefore, the DAC system phase and amplitude response will be dependent on the external analog circuitry.

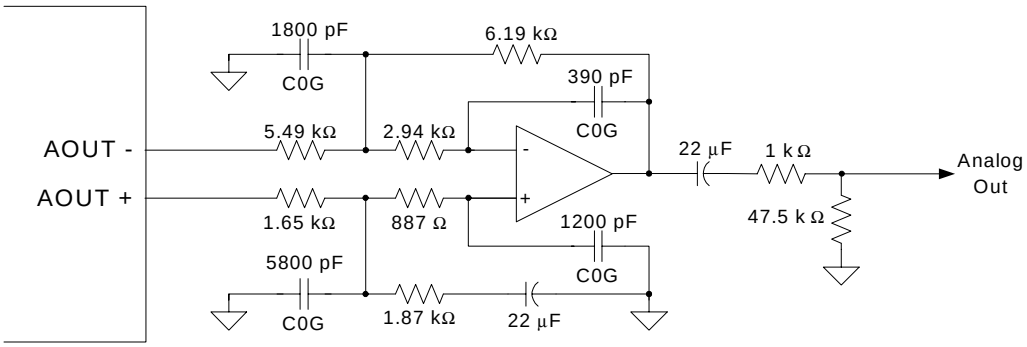

Figure 25. Recommended Analog Output Buffer

9. APPENDIX B: PLL FILTER

9.1 External Filter Components

9.1.1 General

The PLL behavior is affected by the external filter component values in the Typical Connection Diagrams. Figure 5 and Figure 6 show the recommended configuration of the two capacitors and one resistor that comprise the PLL filter. The external PLL component values listed in Table 16 have a high corner-frequency jitter-attenuation curve, take a short time to lock, and offer good output jitter performance. Lock times are worst case for an Fsi transition of 192 kHz.

RFILT (kΩ)	CFILT (µF)	CRIP (pF)
2.55	0.047	2200

Table 16. PLL External Component Values

It is important to treat the LPFILT pin as a low-level analog input. It is suggested that the ground end of the PLL filter be returned directly to the AGND pin independently of the digital ground plane.

9.1.2 Capacitor Selection

The type of capacitors used for the PLL filter can have a significant effect on PLL performance. Large or exotic film capacitors are not necessary because their leads, and the required longer circuit board traces, add undesirable inductance to the circuit. Surface-mount ceramic capacitors are a good choice because their own inductance is low, and they can be mounted close to the LPFLT pin to minimize trace inductance. For CRIP, a C0G or NPO dielectric is recommended; and for CFILT, an X7R dielectric is preferred. Avoid capacitors with large temperature co-coefficient, or capacitors with high dielectric constants, that are sensitive to shock and vibration. These include the Z5U and Y5V dielectrics.

9.1.3 Circuit Board Layout

Board layout and capacitor choice affect each other and determine the performance of the PLL. Figure 26 illustrates a suggested layout for the PLL filter components and for bypassing the analog supply voltage. The 10 µF bypass capacitor is an electrolytic in a surface-mount case A or thru-hole package. RFILT, CFILT, CRIP, and the 0.1 µF decoupling capacitor are in an 0805 form factor. The 0.01 µF decoupling capacitor is in the 0603 form factor. The traces are on the top surface of the board with the IC so that there is no via inductance. The traces themselves are short to minimize the inductance in the filter path. The VA and AGND traces extend back to their origin and are shown only in truncated form in the drawing.

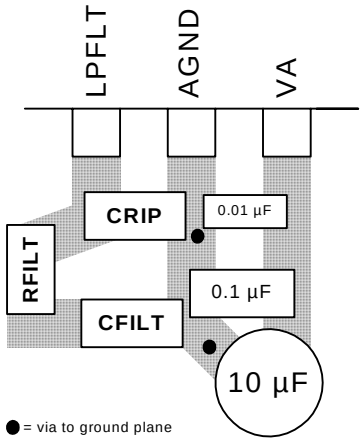

Figure 26. Recommended Layout Example

10.APPENDIX C: ADC FILTER PLOTS

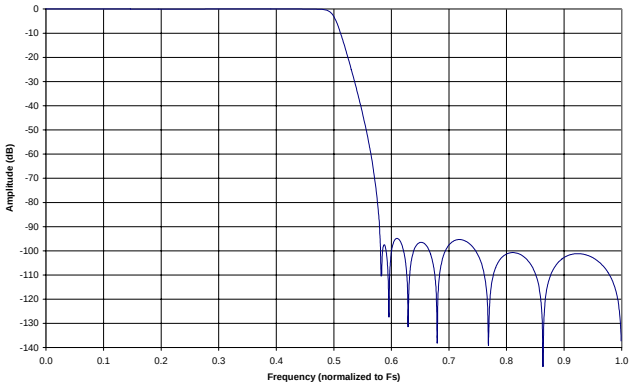

Figure 27. Single-Speed Mode Stopband Rejection

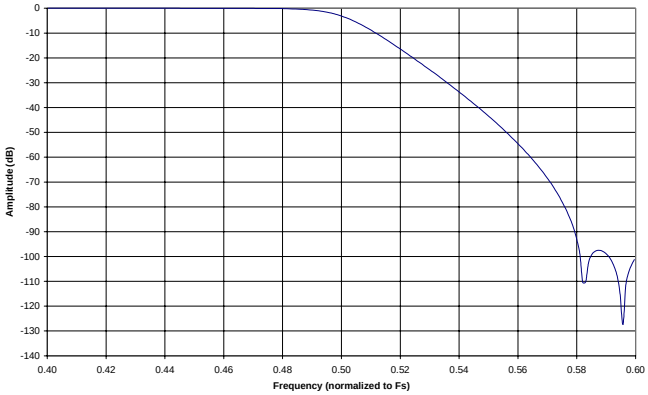

Figure 28. Single-Speed Mode Transition Band

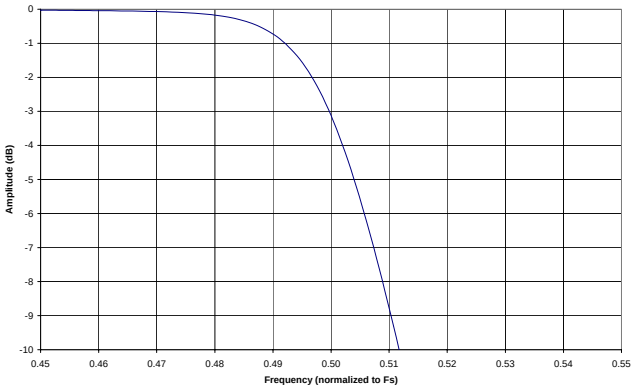

Figure 29. Single-Speed Mode Transition Band (Detail)

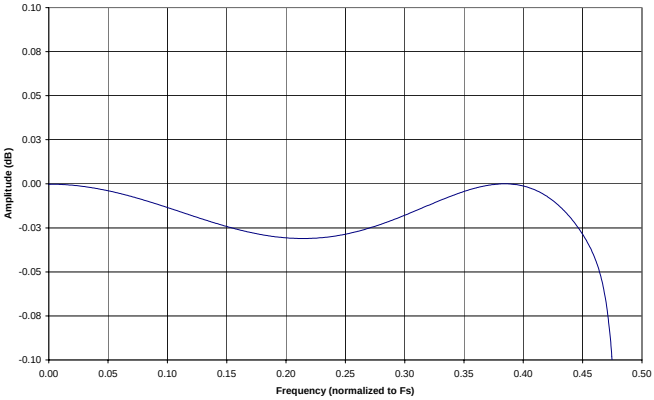

Figure 30. Single-Speed Mode Passband Ripple

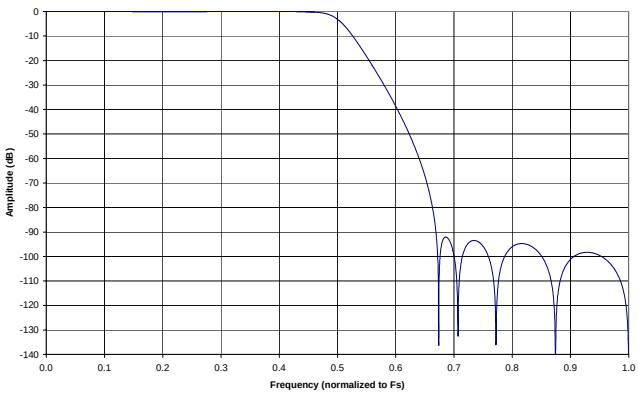

Figure 31. Double-Speed Mode Stopband Rejection

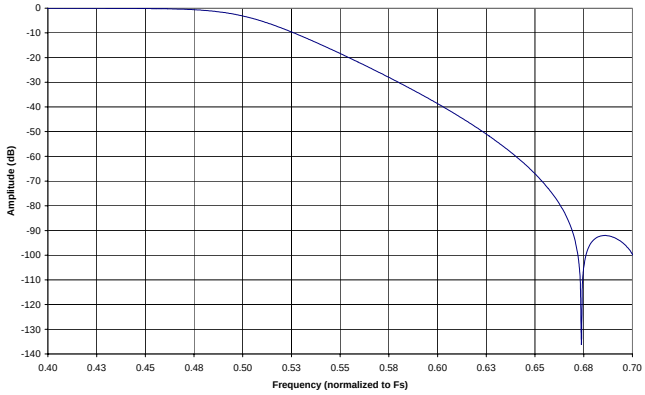

Figure 32. Double-Speed Mode Transition Band

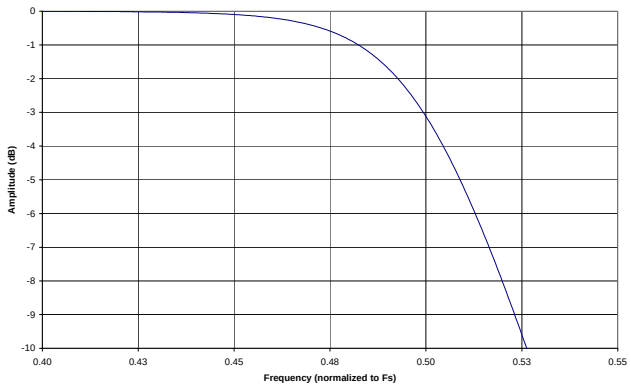

Figure 33. Double-Speed Mode Transition Band (Detail)

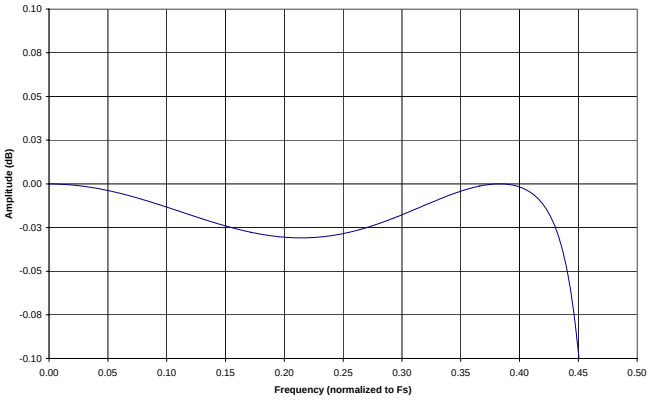

Figure 34. Double-Speed Mode Passband Ripple

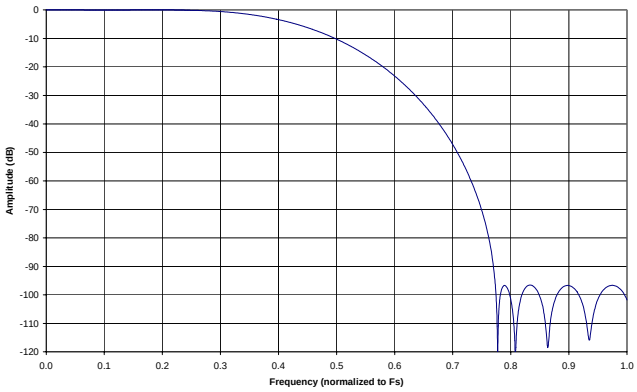

Figure 35. Quad-Speed Mode Stopband Rejection

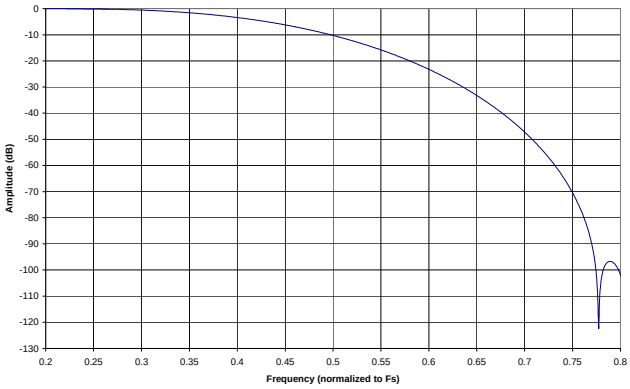

Figure 36. Quad-Speed Mode Transition Band

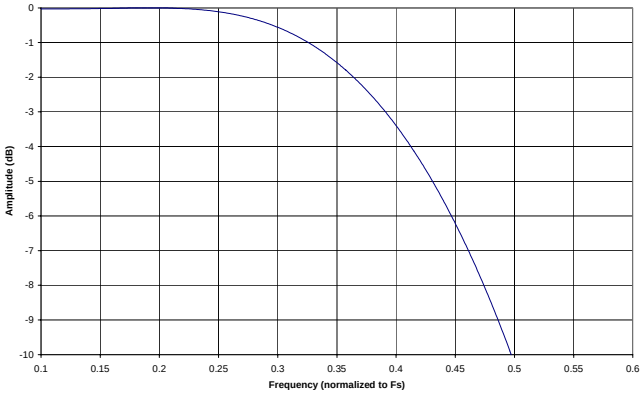

Figure 37. Quad-Speed Mode Transition Band (Detail)

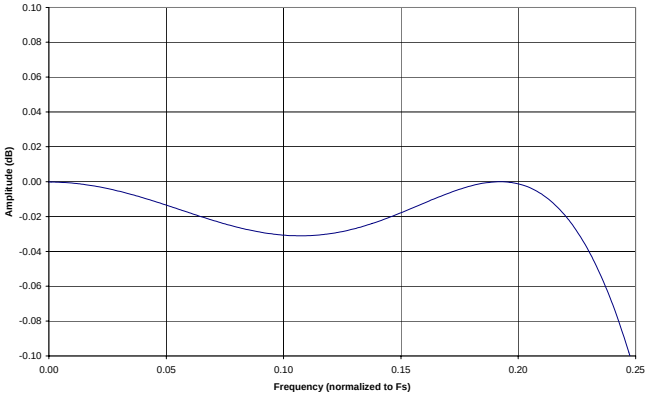

Figure 38. Quad-Speed Mode Passband Ripple

11.APPENDIX D: DAC FILTER PLOTS

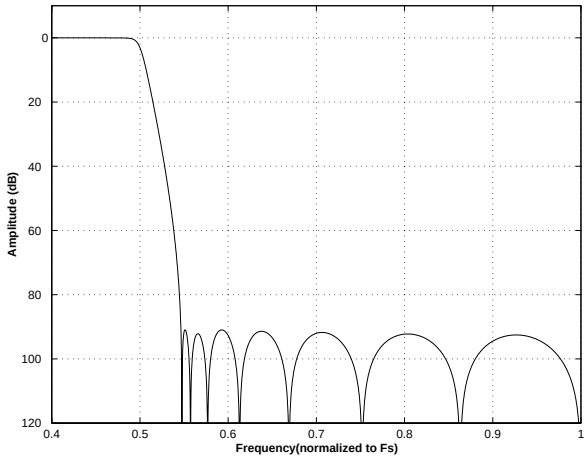

Figure 39. Single-Speed (fast) Stopband Rejection

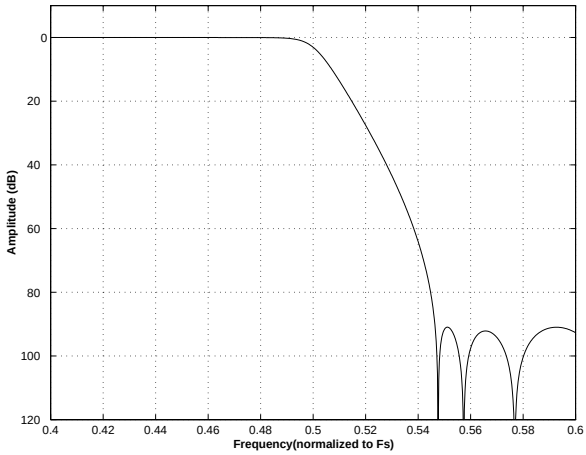

Figure 40. Single-Speed (fast) Transition Band

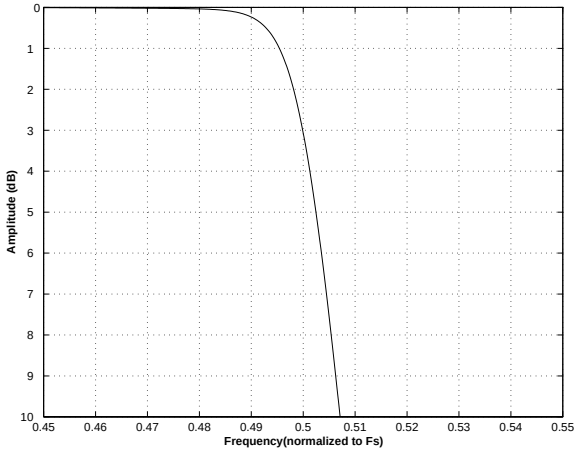

Figure 41. Single-Speed (fast) Transition Band (detail)

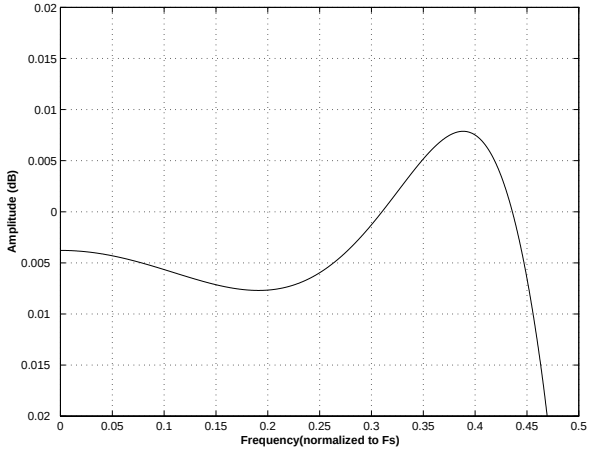

Figure 42. Single-Speed (fast) Passband Ripple

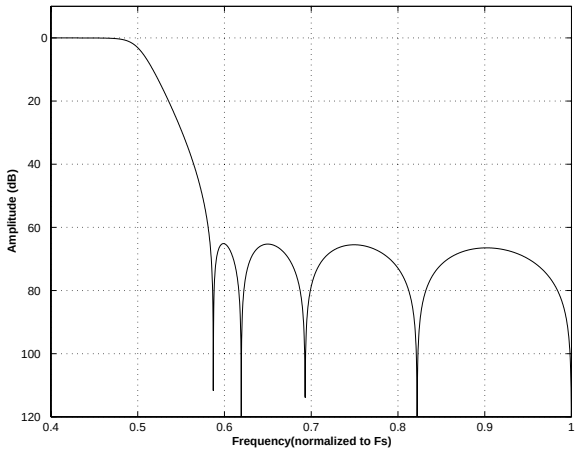

Figure 43. Single-Speed (slow) Stopband Rejection

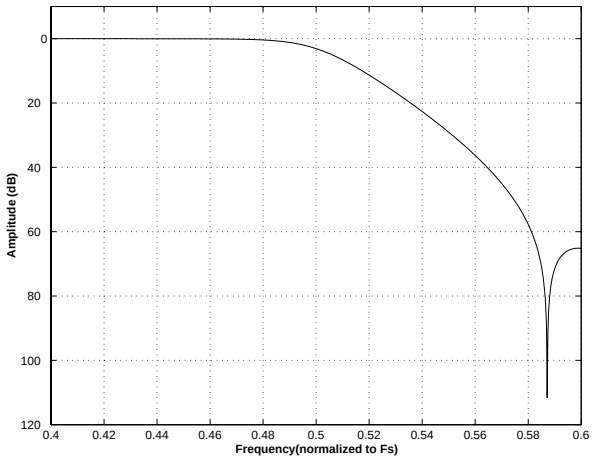

Figure 44. Single-Speed (slow) Transition Band

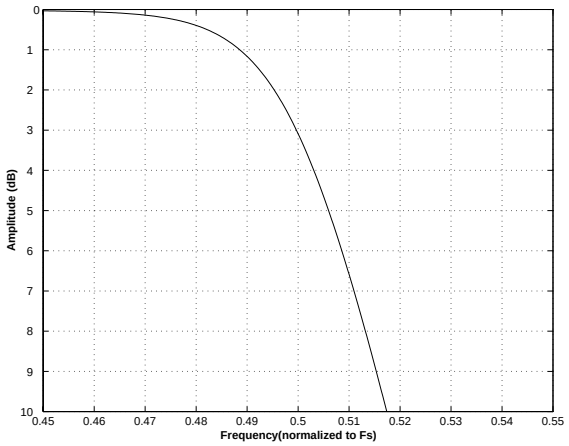

Figure 45. Single-Speed (slow) Transition Band (detail)

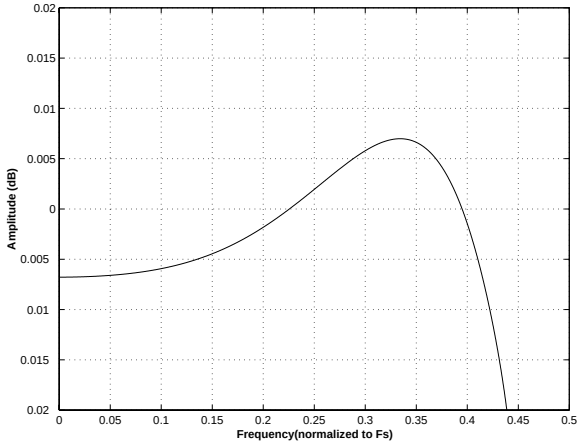

Figure 46. Single-Speed (slow) Passband Ripple

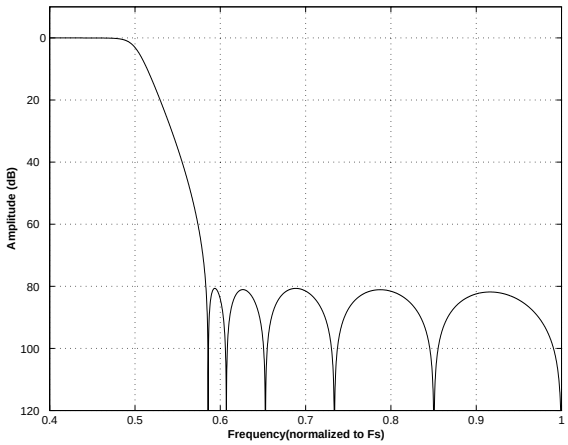

Figure 47. Double-Speed (fast) Stopband Rejection

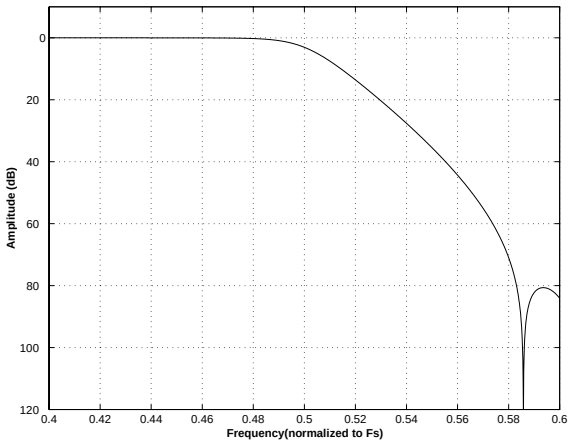

Figure 48. Double-Speed (fast) Transition Band

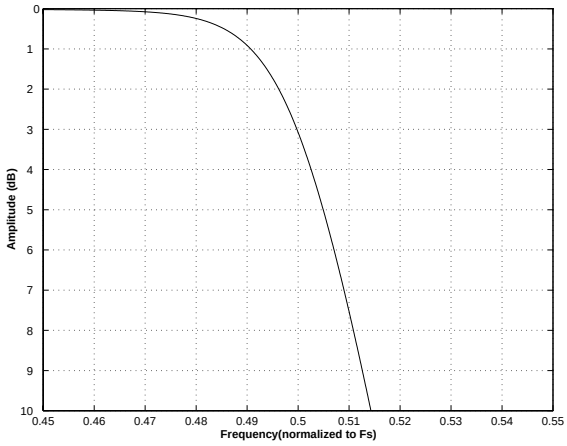

Figure 49. Double-Speed (fast) Transition Band (detail)

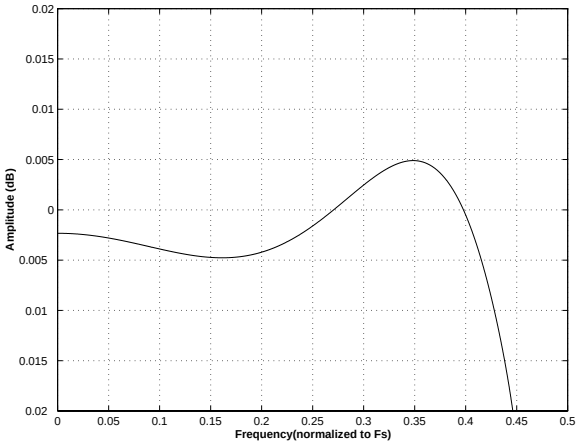

Figure 50. Double-Speed (fast) Passband Ripple

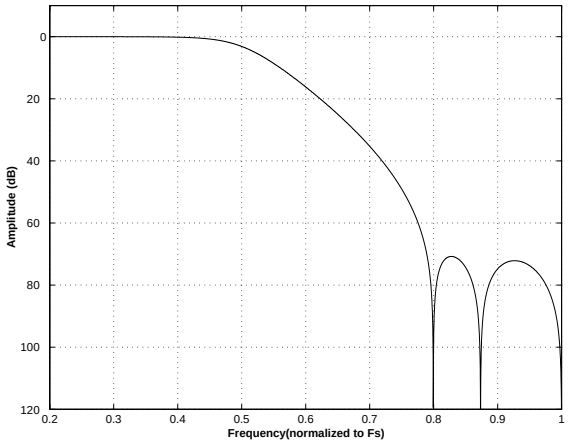

Figure 51. Double-Speed (slow) Stopband Rejection

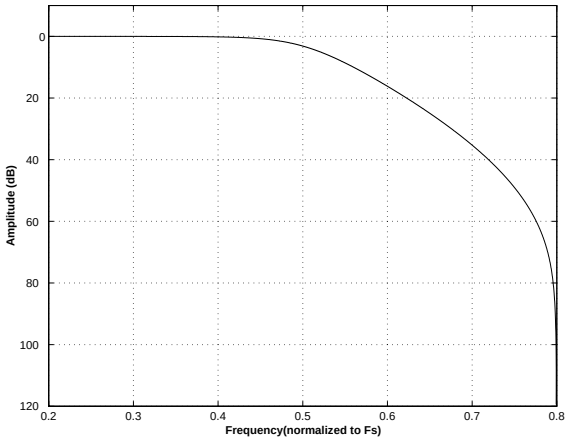

Figure 52. Double-Speed (slow) Transition Band

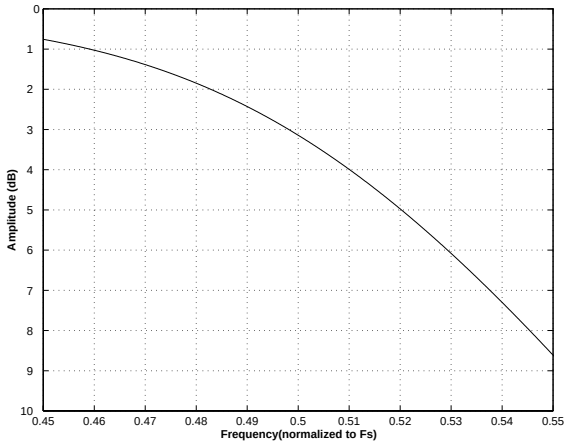

Figure 53. Double-Speed (slow) Transition Band (detail)

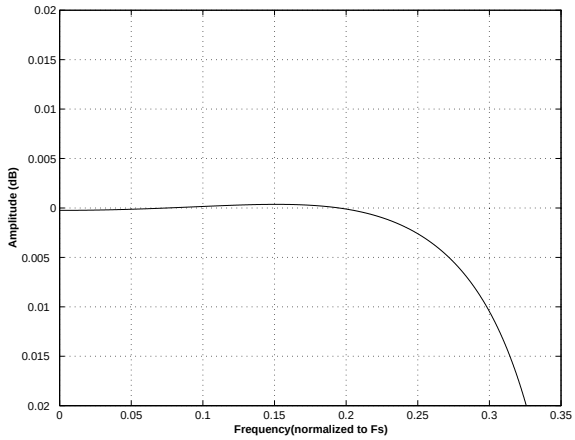

Figure 54. Double-Speed (slow) Passband Ripple

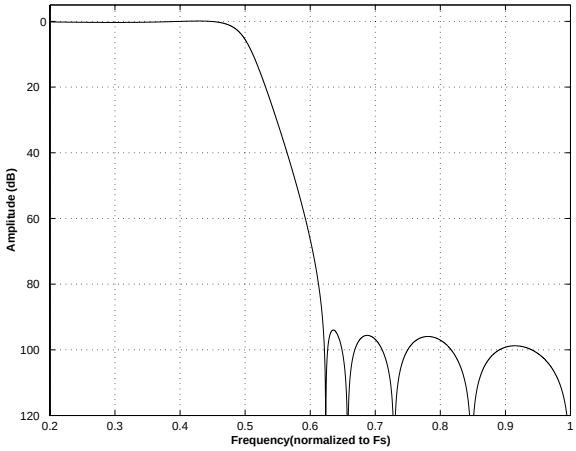

Figure 55. Quad-Speed (fast) Stopband Rejection

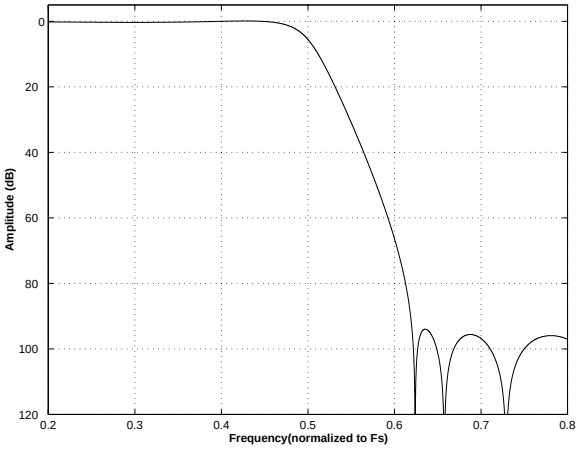

Figure 56. Quad-Speed (fast) Transition Band

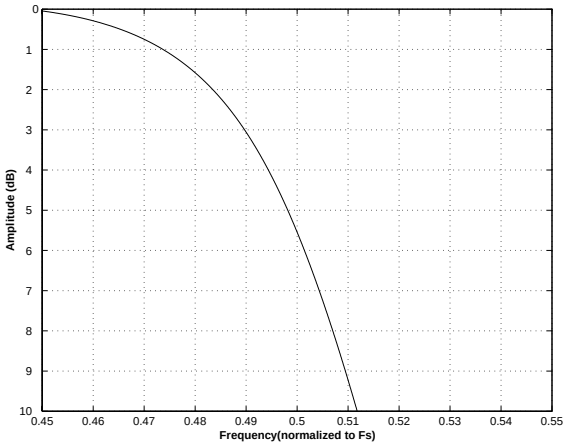

Figure 57. Quad-Speed (fast) Transition Band (detail)

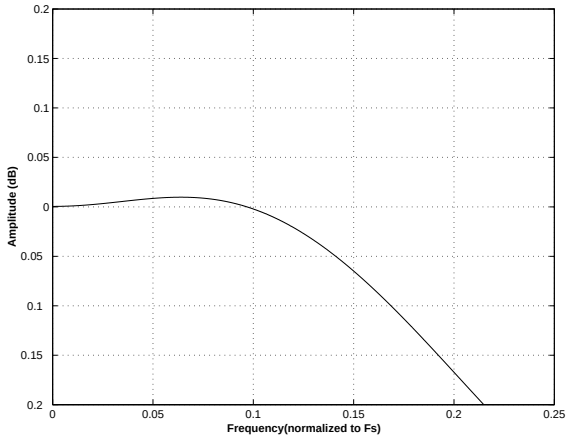

Figure 58. Quad-Speed (fast) Passband Ripple

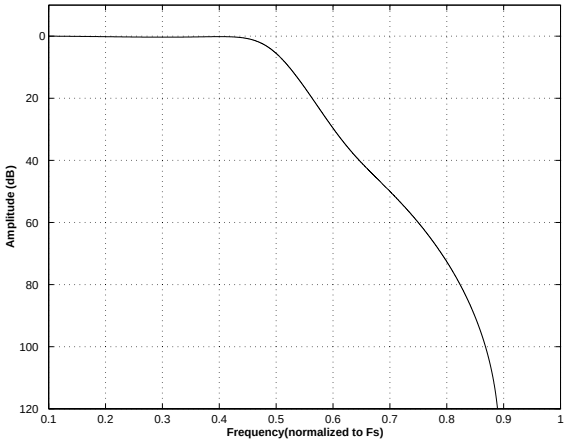

Figure 59. Quad-Speed (slow) Stopband Rejection

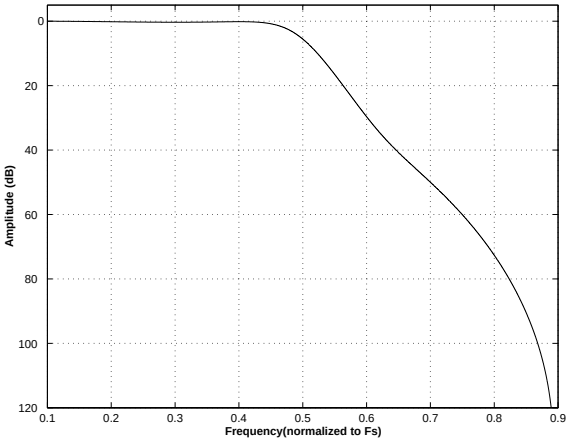

Figure 60. Quad-Speed (slow) Transition Band

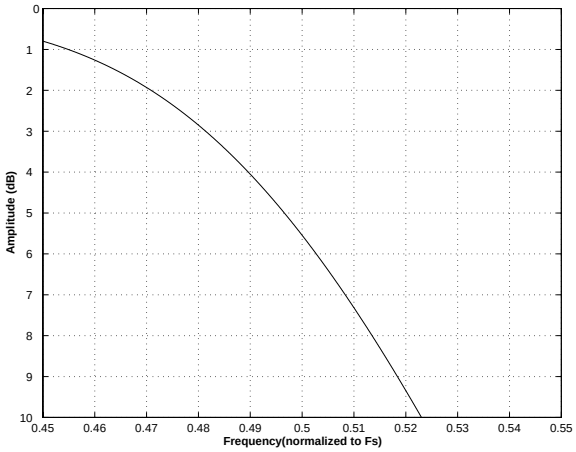

Figure 61. Quad-Speed (slow) Transition Band (detail)

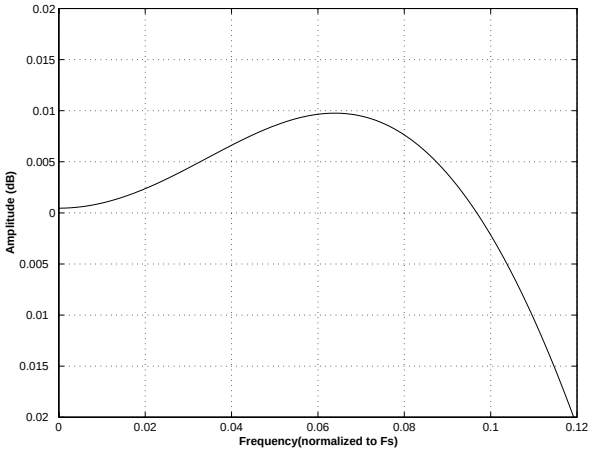

Figure 62. Quad-Speed (slow) Passband Ripple

12.PACKAGE DIMENSIONS

64L LQFP PACKAGE DRAWING

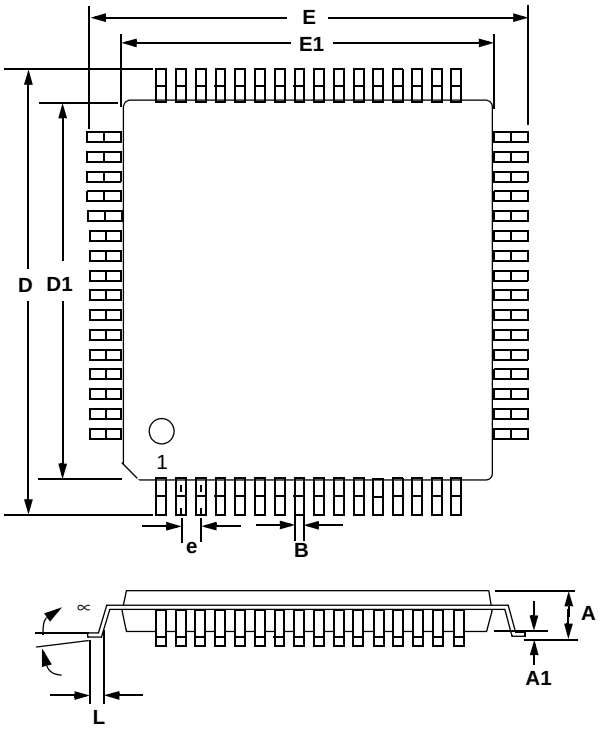

	INCHES			MILLIMETERS		
DIM	MIN	NOM	MAX	MIN	NOM	MAX
A	---	0.55	0.063	---	1.40	1.60
A1	0.002	0.004	0.006	0.05	0.10	0.15
B	0.007	0.008	0.011	0.17	0.20	0.27
D	0.461	0.472 BSC	0.484	11.70	12.0 BSC	12.30
D1	0.390	0.393 BSC	0.398	9.90	10.0 BSC	10.10
E	0.461	0.472 BSC	0.484	11.70	12.0 BSC	12.30
E1	0.390	0.393 BSC	0.398	9.90	10.0 BSC	10.10
e*	0.016	0.020 BSC	0.024	0.40	0.50 BSC	0.60
L	0.018	0.024	0.030	0.45	0.60	0.75
∝	0.000°	4°	7.000°	0.00°	4°	7.00°

* Nominal pin pitch is 0.50 mm

Controlling dimension is mm.
JEDEC Designation: MS026

THERMAL CHARACTERISTICS

Parameter	Symbol	Min	Typ	Max	Units
Allowable Junction Temperature		-	-	+135	°C
Junction to Ambient Thermal Impedance	θ_{JA}	-	48	-	°C/Watt

13.ORDERING INFORMATION

Product	Description	Package	Pb-Free	Grade	Temp Range	Container	Order #
CS42418	110 dB, 192 kHz 8-Ch Codec with PLL	64-pin LQFP	YES	Commercial	-10° to +70° C	Tray	CS42418-CQZ
						Tape & Reel	CS42418-CQZR
				Automotive	-40° to +85° C	Tray	CS42418-DQZ
						Tape & Reel	CS42418-DQZR
CDB42428	CS42418 Evaluation Board		No	-	-	-	CDB42428

14.REFERENCES

1) Cirrus Logic, Audio Quality Measurement Specification, Version 1.0, 1997. http://www.cirrus.com/products/papers/meas/meas.html
2) Cirrus Logic, AN18: Layout and Design Rules for Data Converters and Other Mixed Signal Devices, Version 6.0, February 1998.
3) Cirrus Logic, Techniques to Measure and Maximize the Performance of a 120 dB, 96 kHz A/D Converter Integrated Circuit, by Steven Harris, Steven Green and Ka Leung. Presented at the 103rd Convention of the Audio Engineering Society, September 1997.
4) Cirrus Logic, A Stereo 16-bit Delta-Sigma A/D Converter for Digital Audio, by D.R. Welland, B.P. Del Signore, E.J. Swanson, T. Tanaka, K. Hamashita, S. Hara, K. Takasuka. Paper presented at the 85th Convention of the Audio Engineering Society, November 1988.
5) Cirrus Logic, The Effects of Sampling Clock Jitter on Nyquist Sampling Analog-to-Digital Converters, and on Oversampling Delta Sigma ADC's, by Steven Harris. Paper presented at the 87th Convention of the Audio Engineering Society, October 1989.
6) Cirrus Logic, An 18-Bit Dual-Channel Oversampling Delta-Sigma A/D Converter, with 19-Bit Mono Application Example, by Clif Sanchez. Paper presented at the 87th Convention of the Audio Engineering Society, October 1989.
7) Cirrus Logic, How to Achieve Optimum Performance from Delta-Sigma A/D and D/A Converters,by Steven Harris. Presented at the 93rd Convention of the Audio Engineering Society, October 1992.
8) Cirrus Logic, A Fifth-Order Delta-Sigma Modulator with 110 dB Audio Dynamic Range, by I. Fujimori, K. Hamashita and E.J. Swanson. Paper presented at the 93rd Convention of the Audio Engineering Society, October 1992.
9) Philips Semiconductor, The I2C-Bus Specification: Version 2.1, January 2000. http://www.semiconductors.philips.com

15.REVISION HISTORY

Release	Date	Changes
A1	May 2003	Advance Release
A2	August 2004	Added lead free part numbers.
F1	November 2005	Final Release – Added Revision History table on page 71. – Updated registers 6.6.6 and 6.6.7 on page 47. – Updated registers 6.7.4 and 6.7.5 on page 49. – Updated PLL components in Table 16 on page 62. – Added OMCK Frequency specification in the Switching Characteristics table on page 11. – Updated ADC Input Impedance and Offset Error specifications in the Analog Input Characteristics table on page 7. – Updated the DAC Full-Scale Voltage, Output Impedance, and Gain Drift specifications in the Analog Output Characteristics table on page 9. – Updated specification conditions for the analog input characteristics on page 7. – Updated specification conditions for the analog output characteristics on page 9. – Updated specification of t_{ds}, t_{dh}, t_{dpd}, and t_{lrpd} in the Switching Characteristics table on page 11. – Corrected reference to the SW_CTRL[1:0] bits in section 4.4.3 on page 24. – Moved the VQ and FILT+ specifications from the Analog Input Characteristics table on page 7 to the DC Electrical Characteristics table on page 14. – Updated the Power Supply Current and Power Consumption specifications in the DC Electrical Characteristics table on page 14. – Updated section 4.4.4 on page 24. – Corrected default value of the Chip_ID[3:0] bits in register 01h on pages 39 and 42. – Updated default value of the Rev_ID[3:0] bits in register 01h on pages 39 and 42. – Updated PLL_CLK[2:0] bit description on page 49.

Contacting Cirrus Logic Support

For all product questions and inquiries contact a Cirrus Logic Sales Representative.
To find the one nearest to you go to www.cirrus.com/corporate/contacts/sales.cfm

IMPORTANT NOTICE

Cirrus Logic, Inc. and its subsidiaries (“Cirrus”) believe that the information contained in this document is accurate and reliable. However, the information is subject to change without notice and is provided “AS IS” without warranty of any kind (express or implied). Customers are advised to obtain the latest version of relevant information to verify, before placing orders, that information being relied on is current and complete. All products are sold subject to the terms and conditions of sale supplied at the time of order acknowledgment, including those pertaining to warranty, indemnification, and limitation of liability. No responsibility is assumed by Cirrus for the use of this information, including use of this information as the basis for manufacture or sale of any items, or for infringement of patents or other rights of third parties. This document is the property of Cirrus and by furnishing this information, Cirrus grants no license, express or implied under any patents, mask work rights, copyrights, trademarks, trade secrets or other intellectual property rights. Cirrus owns the copyrights associated with the information contained herein and gives consent for copies to be made of the information only for use within your organization with respect to Cirrus integrated circuits or other products of Cirrus. This consent does not extend to other copying such as copying for general distribution, advertising or promotional purposes, or for creating any work for resale.

CERTAIN APPLICATIONS USING SEMICONDUCTOR PRODUCTS MAY INVOLVE POTENTIAL RISKS OF DEATH, PERSONAL INJURY, OR SEVERE PROPERTY OR ENVIRONMENTAL DAMAGE (“CRITICAL APPLICATIONS”). CIRRUS PRODUCTS ARE NOT DESIGNED, AUTHORIZED OR WARRANTED FOR USE IN AIRCRAFT SYSTEMS, MILITARY APPLICATIONS, PRODUCTS SURGICALLY IMPLANTED INTO THE BODY, AUTOMOTIVE SAFETY OR SECURITY DEVICES, LIFE SUPPORT PRODUCTS OR OTHER CRITICAL APPLICATIONS. INCLUSION OF CIRRUS PRODUCTS IN SUCH APPLICATIONS IS UNDERSTOOD TO BE FULLY AT THE CUSTOMER’S RISK AND CIRRUS DISCLAIMS AND MAKES NO WARRANTY, EXPRESS, STATUTORY OR IMPLIED, INCLUDING THE IMPLIED WARRANTIES OF MERCHANTABILITY AND FITNESS FOR PARTICULAR PURPOSE, WITH REGARD TO ANY CIRRUS PRODUCT THAT IS USED IN SUCH A MANNER. IF THE CUSTOMER OR CUSTOMER’S CUSTOMER USES OR PERMITS THE USE OF CIRRUS PRODUCTS IN CRITICAL APPLICATIONS, CUSTOMER AGREES, BY SUCH USE, TO FULLY INDEMNIFY CIRRUS, ITS OFFICERS, DIRECTORS, EMPLOYEES, DISTRIBUTORS AND OTHER AGENTS FROM ANY AND ALL LIABILITY, INCLUDING ATTORNEYS’ FEES AND COSTS, THAT MAY RESULT FROM OR ARISE IN CONNECTION WITH THESE USES.

Cirrus Logic, Cirrus, and the Cirrus Logic logo designs are trademarks of Cirrus Logic, Inc. All other brand and product names in this document may be trademarks or service marks of their respective owners.

SPI is a trademark of Motorola, Inc.