Data Sheet

Central Semiconductor Corp.

145 Adams Avenue, Hauppauge, NY 11788 USA
Tel: (631) 435-1110 • Fax: (631) 435-1824

Manufacturers of World Class Discrete Semiconductors

CQ220I-6BS
CQ220I-6DS
CQ220I-6MS
CQ220I-6NS

ISOLATED TAB TRIAC
6.0 AMP, 200 THRU 800 VOLTS

JEDEC TO-220AB CASE

DESCRIPTION

The CENTRAL SEMICONDUCTOR CQ220I-6BS series type is an Epoxy Molded Silicon Triac designed for full wave AC control applications featuring gate triggering in all four (4) quadrants. This device is mounted in a TO-220 case with an isolated mounting tab.

MAXIMUM RATINGS ($T_C = 25°C$ unless otherwise noted)

	SYMBOL	CQ220I -6BS	CQ220I -6DS	CQ220I -6MS	CQ220I -6NS	UNITS
Peak Repetitive Off-State Voltage	V_{DRM}	200	400	600	800	V
RMS On-State Current ($T_C = 90°C$)	$I_{T(RMS)}$		6.0			A
Peak One Cycle Surge (t = 10ms)	I_{TSM}		60			A
I^2t Value for Fusing (t = 10ms)	I^2t		18			A^2s
Peak Gate Power (tp = 10μs)	P_{GM}		40			W
Average Gate Power Dissipation	$P_{G(AV)}$		1.0			W
Peak Gate Current (tp = 10μs)	I_{GM}		4.0			A
Peak Gate Voltage (tp = 10μs)	V_{GM}		16			V
Critical Rate of Rise of On-State Current Repetitive (F = 50Hz)	di/dt		10			A/μs
Storage Temperature	T_{stg}		-40 to +150			°C
Junction Temperature	T_J		-40 to +110			°C
Thermal Resistance	Θ_{J-A}		60			°C/W
Thermal Resistance	Θ_{J-C}		4.4			°C/W
Isolation Voltage	V_{ISO}		2500			$V_{(RMS)}$

ELECTRICAL CHARACTERISTICS ($T_C = 25°C$ unless otherwise noted)

SYMBOL	TEST CONDITIONS	MIN	TYP	MAX	UNITS
I_{DRM}	Rated V_{DRM}			0.01	mA
I_{DRM}	Rated V_{DRM}, $T_C = 110°C$			0.75	mA
I_{GT}	$V_D = 12V$, $R_L = 33\Omega$, QUAD I,II,III			5.0	mA
I_{GT}	$V_D = 12V$, $R_L = 33\Omega$, QUAD IV			10	mA
I_H	$I_T = 100mA$			15	mA
V_{GT}	$V_D = 12V$, $R_L = 33\Omega$, QUAD I,II,III,IV			1.50	V
V_{TM}	$I_{TM} = 8.5A$, tp = 10ms			1.65	V
dv/dt	$V_D = \frac{2}{3}V_{DRM}$, $R_{GK} = \infty$, $T_C = 110°C$		10		V/μs

CQ220I-6BS SERIES RATING AND CHARACTERISTIC CURVES

RMS ON-STATE CURRENT vs. CASE TEMPERATURE

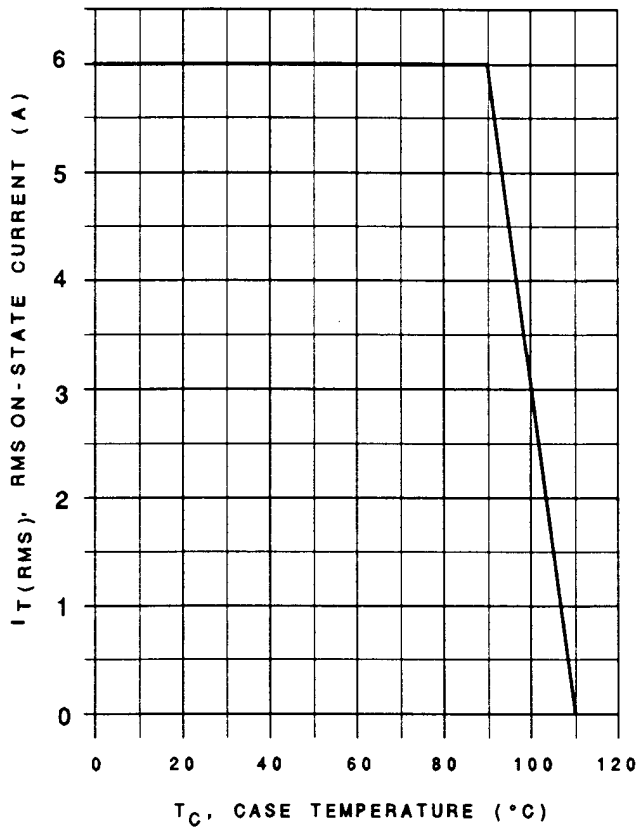

MAXIMUM ON-STATE CHARACTERISTICS

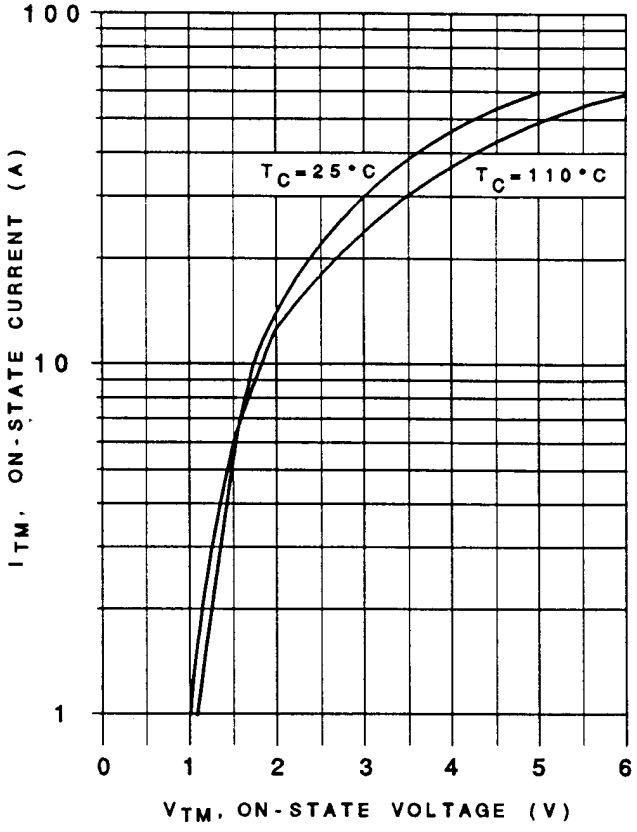

MECHANICAL DIMENSIONS

All Dimensions in Inches (mm).

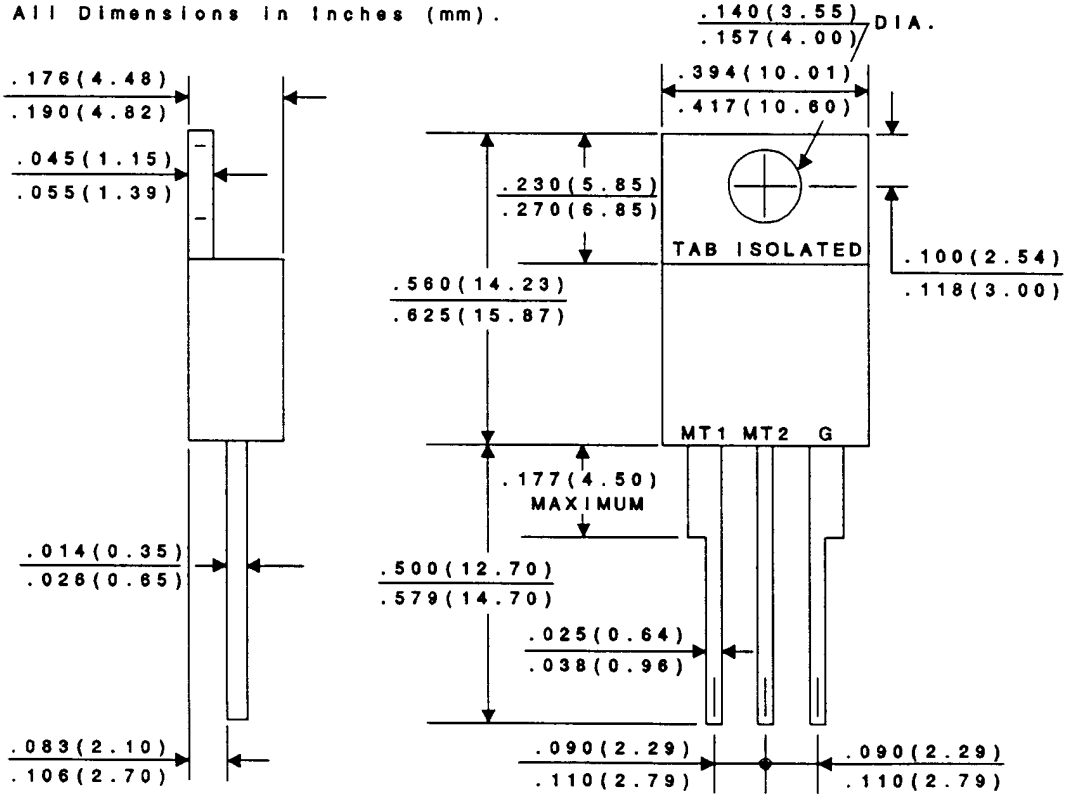

Central Semiconductor Corp.