CQ220-12M3

SILICON
THREE-QUADRANT TRIAC
12 AMP, 600 VOLT



TO-220 CASE

Central Semiconductor Corp.

www.centralsemi.com

DESCRIPTION:

The CENTRAL SEMICONDUCTOR CQ220-12M3 is an epoxy molded silicon TRIAC designed for full wave AC control applications featuring gate triggering in three quadrants.

MARKING: FULL PART NUMBER

FEATURES:

- 3Q technology for noise immunity
- High commutation capability
- Triggering in three quadrants only

APPLICATIONS:

- Motor controls
- General purpose AC switching
- High power inductive load switching

MAXIMUM RATINGS: (T_C=25°C unless otherwise noted)	**SYMBOL**		**UNITS**
Peak Repetitive Off-State Voltage	V_{DRM}, V_{RRM}	600	V
Peak One Cycle Surge Voltage, t=10ms (T_J=125°C)	V_{DSM}	700	V
RMS On-State Current (T_C=90°C)	$I_{T(RMS)}$	12	A
Peak One Cycle Surge Current, t=16.7ms	I_{TSM}	100	A
I^2t Value for Fusing, t=10ms	I^2t	78	A^2s
Average Gate Power Dissipation (T_J=125°C)	$P_{G(AV)}$	1.0	W
Peak Gate Current, tp=20μs (T_J=125°C)	I_{GM}	4.0	A
Critical Rate of Rise of On-State Current Repetitive, f=120Hz (T_J=125°C)	di/dt	50	A/μs
Operating Junction Temperature	T_J	-40 to +125	°C
Storage Temperature	T_{stg}	-40 to +150	°C
Thermal Resistance	Θ_{JA}	60	°C/W
Thermal Resistance	Θ_{JC}	1.4	°C/W

ELECTRICAL CHARACTERISTICS: (T_C=25°C unless otherwise noted)

SYMBOL	**TEST CONDITIONS**	**MIN**	**TYP**	**MAX**	**UNITS**
I_{DRM}, I_{RRM}	V_{DRM}, V_{RRM}=600V			5.0	μA
I_{GT}	V_D=12V, R_L=30Ω, QUAD I, II, III			50	mA
I_H	I_T=500mA			50	mA
V_{GT}	V_D=12V, R_L=30Ω, QUAD I, II, III			1.3	V
V_{TM}	I_{TM}=17A, tp=380μs		1.39	1.55	V
dv/dt	V_D=⅔V_{DRM}, R_{GK}=∞, T_J=125°C			500	V/μs

R1 (7-October 2015)

CQ220-12M3

SILICON
THREE-QUADRANT TRIAC
12 AMP, 600 VOLT

TO-220 CASE - MECHANICAL OUTLINE

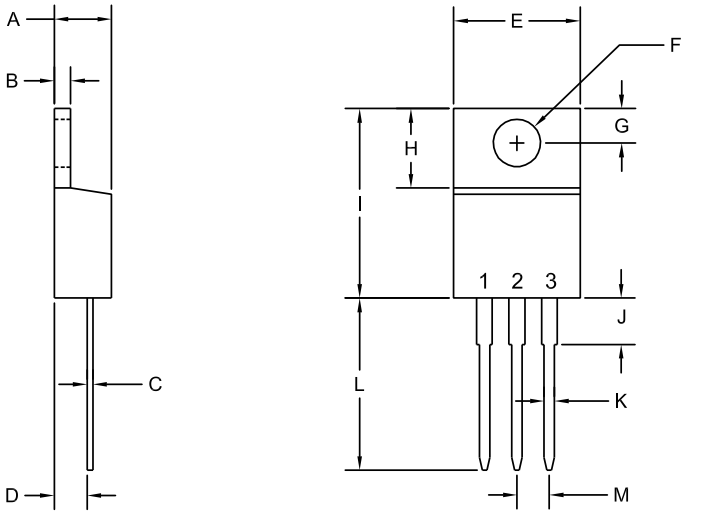

R2

LEAD CODE:
1) MT1
2) MT2
3) Gate
Tab is common to pin 2

MARKING:
FULL PART NUMBER

DIMENSIONS				
	INCHES		MILLIMETERS	
SYMBOL	MIN	MAX	MIN	MAX
A	0.170	0.190	4.31	4.82
B	0.045	0.055	1.15	1.39
C	0.013	0.026	0.33	0.65
D	0.083	0.107	2.10	2.72
E	0.394	0.417	10.01	10.60
F (DIA)	0.140	0.157	3.55	4.00
G	0.100	0.118	2.54	3.00
H	0.230	0.270	5.85	6.85
I	0.560	0.625	14.23	15.87
J	-	0.250	-	6.35
K	0.025	0.038	0.64	0.96
L	0.500	0.579	12.70	14.70
M	0.090	0.110	2.29	2.79

TO-220 (REV: R2)

CQ220-12M3

SILICON
THREE-QUADRANT TRIAC
12 AMP, 600 VOLT

TYPICAL ELECTRICAL CHARACTERISTICS

Gate-Trigger Current

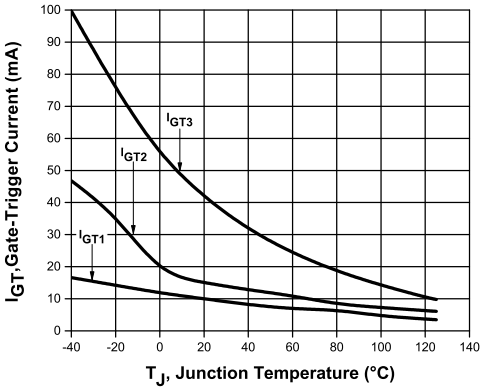

Gate-Trigger Voltage

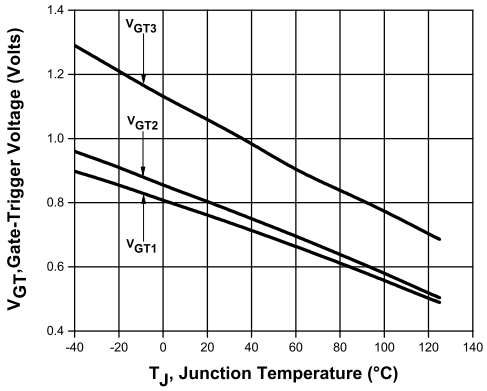

On-State Voltage

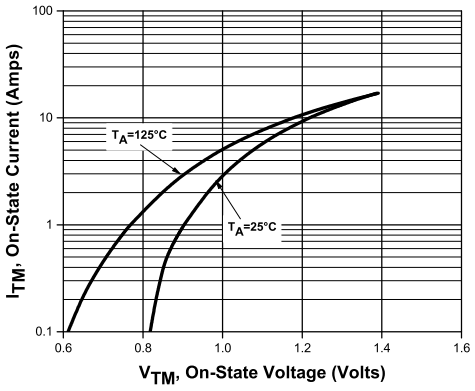

R1 (7-October 2015)

CQ220-12M3

SILICON
THREE-QUADRANT TRIAC
12 AMP, 600 VOLT

TYPICAL ELECTRICAL CHARACTERISTICS

Thermal Resistance versus Pulse Width

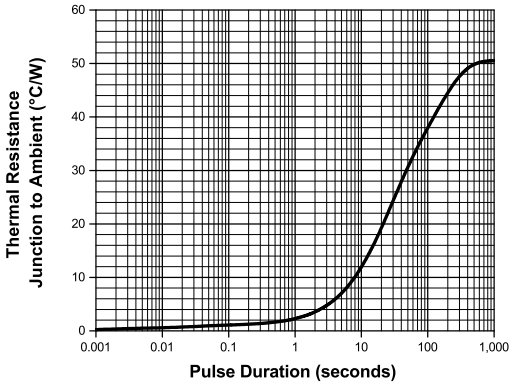

RMS On-State Current Derating

