CONPROSYS Series
CPU Module
3G Model

CPS-MCS341G-DS1-130



* Specifications, color and design of the products are subject to change without notice.

This product is a M2M controller with isolated digital input and output, RS-232C, LAN interface, Ethernet Hub, and a 3G network communication module, which can be operated in Japan.

As you desire, add the configurable type modules of our CONPROSYS series.

All the processes from development to operation can be performed on a web browser. The functions such as Web monitoring of I/O information, alarm processing by I/O information, task divergence enable you to create a Cloud System at low cost and in a short time.

* The contents in this document are subject to change without notice.
* Visit the CONTEC website to check the latest details in the document.
* The information in the data sheets is as of December, 2018.

Hardware Features

Comply with Japan National Standards of 3G network
Following the regulation by the Radio Act of Japan, this product transmits the collected data to the cloud server through 3G communication network.

* Please contact us for detailed information.

Add configurable modules
This product allows you to install modules from a wide variety of types to suit the needs of the user.

* Up to 16 modules can be set and the total current consumption should be less than 3.3A.

No base board required
As the product requires no base board for installation, it helps add modules easily and smoothly.

Installed modules can be removed from any set positions on DIN rail.

Compact design
Compact design, 44.7(W)×94.7(D)×124.8 (H), features flexibility in installation.

Adaptable to a temperature range between -20 and +60°C
The product is capable of operating in the temperature between -20 and + 60°C. It can be installed in the various environments.

Ethernet Hub function within
Use the product as Ethernet Hub so that you can connect devices in the daisy-chain.

A powerful running platform without fan
The product contains the ARM® Cortex®-A8 processor (600MHz) and the DDR3 512MB system memory.

Decrease damages by bus isolation and surge protection. (digital input/output)
Electrical isolation between the digital input/output and CPU can block electrical noise flow. Moreover, the surge protection elements are adopted

Opto-coupler Isolation Input and semiconductor relay output
The product has the switchable four channels of opto-coupler isolation input (compatible with current sink output) and semiconductor relay output. It is usable for external switch inputting or LED lighting.

Max. 115,200bps RS-232C Serial Communication
The Product has one RS-232C-standard serial port. Baud rates from 300 to 115,200 bps can be set.

Installation easy with two pieces of terminal support and DIN rail
You can install and remove a terminal connector without a screwdriver so that it can shorten the time of the replacement. As the product can be mounted on a DIN rail, removing and replacing are easy as well.

Equipped with LED for an operation check
The product has LED for an operation check, which helps you visually confirm the communication status of each interface.

No electrolytic capacitor battery
No electrolytic capacitor is used. The Contec is creating the product with a longer life.

Software Features

Measurement and upload
This product measures data with an external sensor and uploads them to the Cloud server.

Web monitoring
The product contains a Web server (Java applet). Even with the PC located remotely, I/O information can be monitored and updated through a Web browser
On the monitoring screen, the standard GUI parts (graphic, slider, button, etc.) can be freely arranged.
All operations including monitoring layout, making relations with I/O information, can be achieved through a Web browser.

Web task script
By combining icons such as arithmetic operations, conditional branching, data outputting, you can set up the executions or its processes like drawing them in the flowchart. All operations can be completed through a Web browser.

Message communication function
With the RS-232C or the Ethernet device (TCP/UDP), up to 10 links can be set to send or receive messages.
Message communication can be accomplished from Web task script.

Specifications

Function specifications

Item		CPS-MCS341G-DS1-130
CPU		ARM Cortex-A8 600MHz
Memory		On Board 512MB DDR3 SDRAM
OM		On-Board 64MB NOR Flash for OS
LAN	Transmission standard	10BASE-T/100BASE-TX
	The number of channels	2
	Connector	RJ-45 Connector
	LED	Speed (Yellow), Link/Act (Green)
USB	Transmission standard	USB2.0 standard follow
	The number of channels	1
	Connector	TYPE-A
SD card slot	Standard	SD standard follow
	Connector	SD memory card slot
	LED	Read/Write (Green)
RS-232C	Baud Rate	300bps - 115.2kbps
	Data length	5, 6, 7, 8 bit 1, 1.5, 2 stopbit
	Parity check	Even, Odd, Non-parity
	Isolation/Resistance	Non-isolated
	The number of channels	1
	Connector	9-pin D-SUB connector (Male)
	LED	Transmission (Green), Reception (Green)
Digital input and Output	Input type	Opto-coupler isolation input (Compatible with current sink output) (negative logic) *1
	Input isolation	Opto-coupler isolation
	Input voltage resistance	1000V
	The number of input signal channels	4
	Open-circuit impedance	10kΩ or more
	Short-circuit impedance	500Ω or less
	Response time (digital input)	Within 200μsec
	Interrupt (digital input)	4 interrupt input signals are arranged into a single output of interrupt signal. An interrupt is generated at the falling edge (HIGH-to-LOW transition) or rising edge (LOW-to-HIGH transition). (setting can be done by software)
	Output type	Semiconductor relay output
	Output isolation	Semiconductor relay isolation
	Output voltage resistance	1000V
	The number of output signal channels	4 *usable as digital input or digital output
	Maximum output voltage/current	13.2V/100mA
	Response time	Within 2msec
	ON resistance	8Ω or less (at 25 °C)
	OFF leakage current	4μA or less (at 25 °C)
	Surge protection element	Interactive TVS Diode Stand off voltage : ±30V, Peak pulse power : 400W(1ms)
	LED	DIO0-DIO3 (Green)
	Connector	2 pieces 3.81mm pitch 6-pin Terminal (N.C., DIO3, DIO2, DIO1, DIO0, MCOM)
	Applicable wire	AWG28 - 16
Stack Bus	The maximum number of stack buses	16 *2
LED		Power (Green)/Status 1 (Green)/Status 2 (Red) /Error(Red)
Switch		Power SW, Rotary SW, DIP SW
RTC		RTC built-in (battery within)
Power supply *3	Rated input voltage	24VDC
	Input voltage range	21.6 - 26.4VDC
	Power consumption	Controller alone: 24V 0.3A (Max.) With module(s): 24V 3.6A (Max.)
	Connector	2-piece 3.5mm pitch 3-pin terminal (V+, V-, FG)
	Applicable wire	AWG20 - 16
	Surge protection element V+ - V-, V- - FG	Interactive TVS diode Stand off voltage : ±30V, Peak pulse power : 400W(1msec)
Physical dimensions (mm)		44.7(W)×94.7(D)×124.8(H) (No projection included)
Weight		300g

Item	CPS-MCS341G-DS1-130
Installation method	Quick mounting on the 35mm DIN rail
OS	Linux kernel 3.2

*1 Data 0 corresponds to High level and Data 1 corresponds to Low level.
*2 The total current consumption of the devices should be less than 3.3A
*3 Use power cable within 3meters.

Wireless Specifications

Item		CPS-MCS341G-DS1-130
Support SIM		MVNO SIM
SIM slot		Standard SIM
Communication method		3G (UMTS)
Wireless frequency (domestic support exclusively)		Band1(2100MHz), Band2(1900MHz), Band5(850MHz), Band6(800MHz), Band8(900MHz), Band19(800MHz)
Communication speed	Upload	Maximum 384kBit/s
	Download	Maximum 384kBit/s

Installation Environment Requirements

Item		CPS-MCS341G-DS1-130
Operating ambient temperature		-20 - +60°C *4
Operating ambient humidity		10 - 90%RH (No condensation)
Non-operating ambient temperature		-20 - +60°C
Non-operating ambient humidity		10 - 90%RH (No condensation)
Floating dust particles		Not to be excessive
Corrosive gases		None
Line-noise resistance	Line noise	AC Line/±2kV *5 Signal Line /±1kV(IEC61000-4-4 Level 3, EN61000-4-4 Level 3)
	Static electricity resistance	Touch /±4kV(IEC61000-4-2 Level 2, EN61000-4-2 Level 2) Air /±8kV(IEC61000-4-2 Level 3, EN61000-4-2 Level 3)
Vibration resistance	Sweep resistance	10 - 57Hz *6 /semi-amplitude vibration 0.15mm, 57 - 150Hz/2.0G 40minutes each in X, Y, and Z directions (JIS C60068-2-6-compliant, IEC60068-2-6-compliant)
Shock resistance		15G half-sine shock for 11ms in X, Y, and Z directions (JIS C 60068-2-27 -compliant, IEC 60068-2-27 -compliant)
Grounding		Class D grounding (previous class 3 grounding), SG-FG/ non-conduction
Standard		VCCI Class A, TELEC

*4 If you use the USB with bus power, operate the product at between -20 and +55°C.
*5 When you use the optional power product.
*6 When you use an optional power product: 10 - 55Hz (See the manual of optional power product for details)

Packing List

Product [CPS-MCS341G-DS1-130] ...1
End Cover...1(attached to the product)
Product Guide ... 1
Warranty Certificate ...1
Cautions for setting the SIM card...1
Serial Number Label ...1
3-pin Connector...1
6-pin Connector...1
Antenna...1

※ Use the supplied plastic DIN rail when connecting this product and a module on a desk top for system development or validation. If you use the supplied plastic DIN rail in the field, it cannot be covered by warranty. Therefore, when you set the product and module in the field, use the commercially available DIN rail.

Physical Dimensions

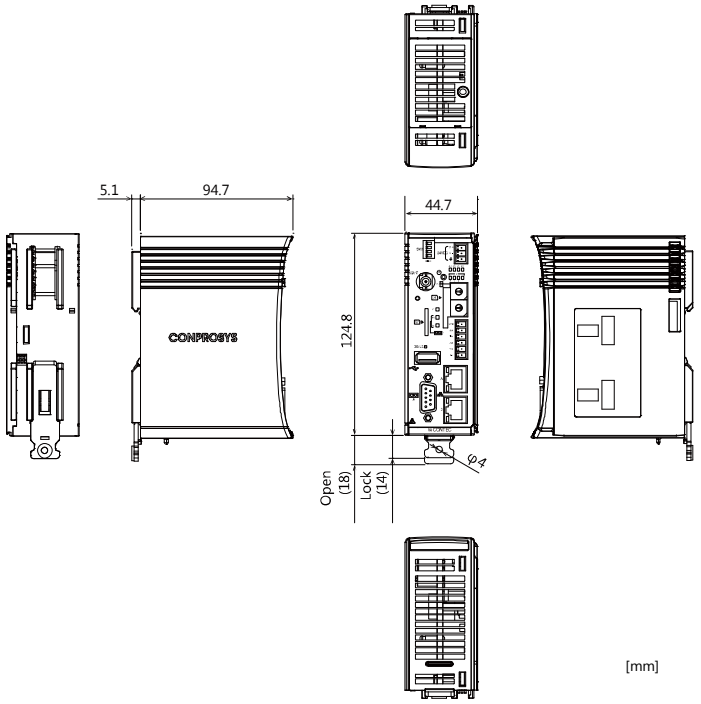

Physical Dimensions (Antenna)

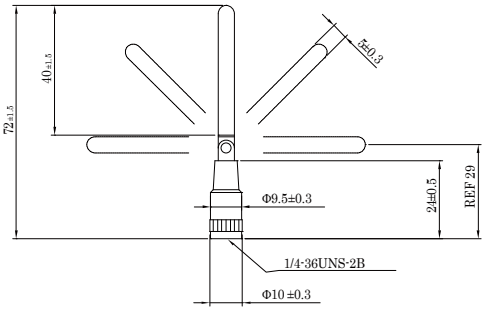

Antenna Steerable Range

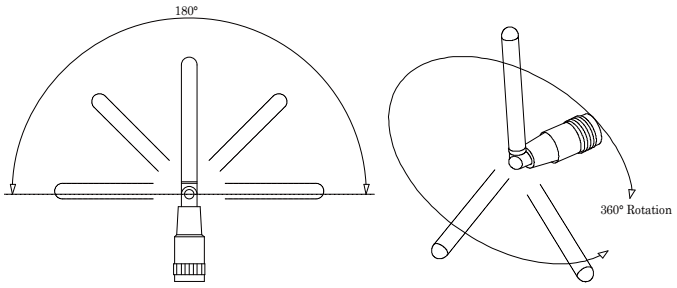

Standard SIM size

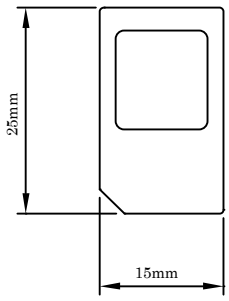

List of Option

DIN rail fitting power supply

CPS-PWD-90AW24-01	: DIN rail fitting power supply 90[w] (Input: 100 - 240VAC, output: 24VDC 3.8 A)
CPS-PWD-30AW24-01	: DIN rail fitting power supply 30[w] (Input: 100 - 240VAC, output: 24VDC 1.3 A)

SD Card

SD-2GB-B	SD Card 2GB
SD-4GB-B	SD Card 4GB

Configurable Type Model

CPS-DIO-0808L	with digital input/output (no built-in power supply)
CPS-DIO-0808BL	with digital input/output (built-in power supply)
CPS-DIO-0808RL	with digital input/output (current source)
CPS-DI-16L	with digital input (16ch, current sink)
CPS-DI-16RL	with digital input (16ch, current source)
CPS-DO-16L	with digital output (16ch, current sink)
CPS-DO-16RL	with digital output (16ch, current source)
CPS-COM-1PC	with RS-232C (contains 1port)
CPS-COM-2PC	with RS-232C (contains 2 ports)
CPS-COM-1PD	with RS-422A/485 (1channel)
CPS-COM-2PD	with RS-422A/485 (2 channels)
CPS-AI-1608LI	with analog input (voltage input 8 channels)
CPS-AI-1608ALI	with analog input (current input 8 channels)
CPS-AO-1804LI	with analog output (current output 4 channels)
CPS-AO-1804VLI	with analog output (voltage output 4 channels)
CPS-CNT-32021	with counter input
CPS-RRY-4PCC	with Relay output
CPS-SSI-4P	with temperature sensor input
CPS-COM-1QL	with LoRa communication

* Visit the Contec website regarding information on the optional products.

Component Name

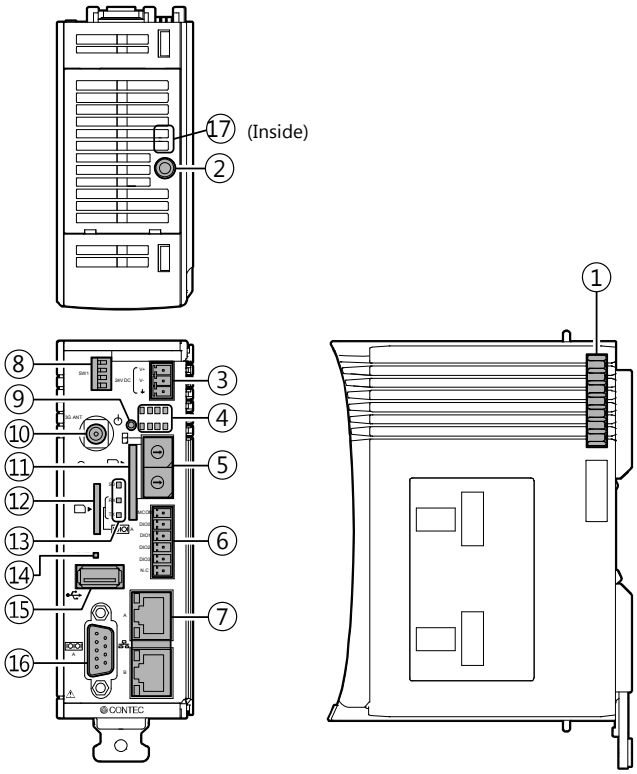

No.	Name	Function
1	Stack Bus	Used for power supply and communication with the configurable type module.
2	Maintenance Connector	Do not use it.
3	Power Connector	Use the 3-pin connector, included in the package.
4	LED Indicator 1	This indicates status of the product.
5	Rotary Switch	Used for user setup.
6	Digital I/O Connector	This is a connector for digital I/O. (Use the 6-pin connector, included in the package)
7	LAN Port	This is a connector for LAN.
8	DIP Switch	This is used for user setup.
9	Power Switch	This is used for controlling of the power supply.
10	Antenna Connector	Use the supplied connector or optional one listed in Appendix.
11	SD Card Slot	This is for data storage.
12	SIM Card Slot	It is a slot for inserting SIM card
13	LED Indicator 2	This indicates the status of the product.
14	3G LED	Display the intensity of the signal reception.
15	USB Port	This is a USB port of type-A.
16	RS-232C Serial Port	This is a RS-232C serial ports (male).
17	DIP Switch 2	This is used to run SDK