PART NUMBER: CPE-420 **DESCRIPTION:** piezo audio indicators

SPECIFICATONS

operating frequency	2.8 ± 0.5 KHz	
operating voltage range	3 ~ 16 V DC	
current consumption	40 mA max.	at 12 V DC
sound pressure level	102 db min.	at 30 cm/12 V DC
rated voltage	12 V DC	
tone	continuous	
operating tempurature	-30 ~ +85° C	
storage tempurature	-40 ~ +95° C	
dimensions	Ø41.8 x H22.0 mm	
weight	17.4 g max.	
material	ABS UL-94 1/16” high heat (black)	
terminal	wire type	
RoHS	yes	

APPEARANCE DRAWING

tolerance: ±0.5
units: mm

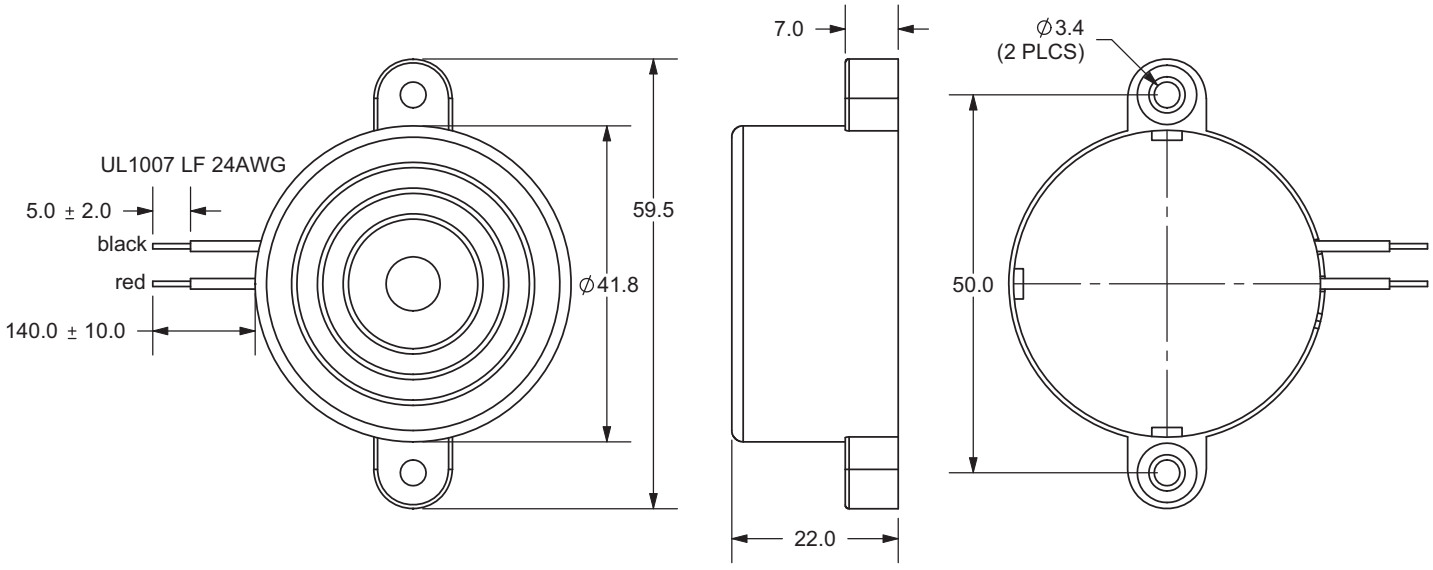

PART NUMBER: CPE-420 **DESCRIPTION:** piezo audio indicators

MEASUREMENT METHOD

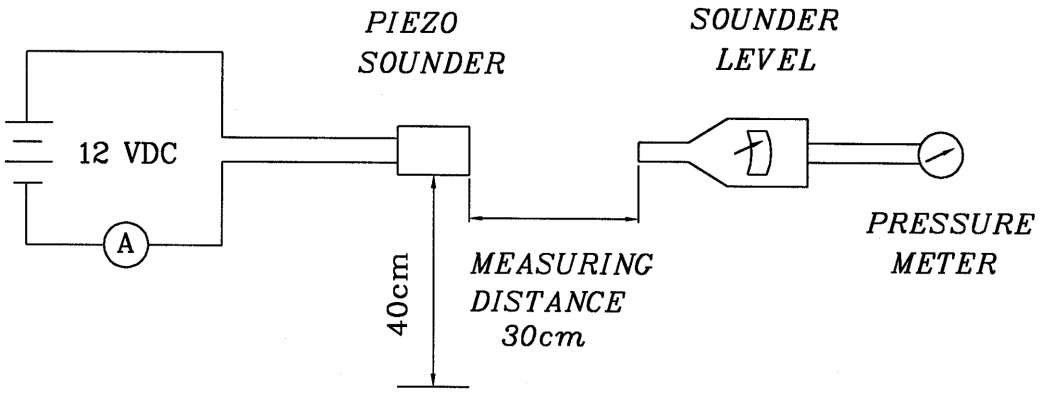

S.P.L. Measuring Circuit
Mic: RION S.P.L. meter UC30 or equivalent
S.G.: Hewlett Packard 33120A function gernerator or equivalent

CURRENT CONSUMPTION/SOUND PRESSURE LEVEL

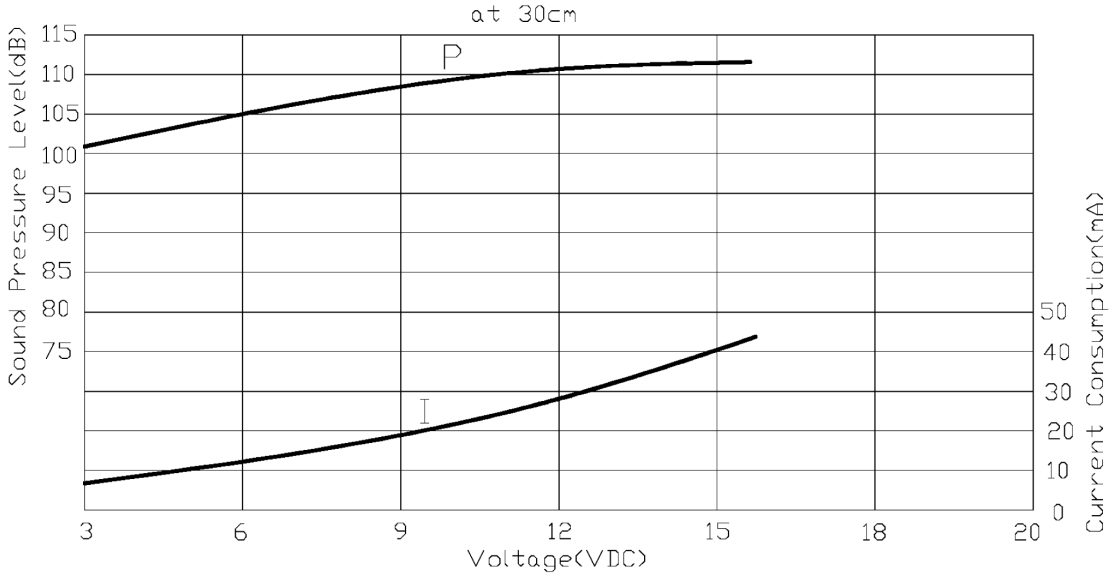

PART NUMBER: CPE-420 **DESCRIPTION:** piezo audio indicators

MECHANICAL CHARACTERISTICS

item	test condition	evaluation standard
solderability	Stripped wires are immersed in rosin for 5 seconds and then immersed in solder bath of 270 ±5°C for 3 ±1 seconds.	90% min. of the lead terminals will be wet with solder (except the edge of the terminal).
lead wire pull strength	The pull force shall be applied to lead wire: Horizontal 3.0N for 30 seconds Vertical 2.0N for 30 seconds	No damage or cutting off.
vibration	The buzzer shall be measured after applying a vibration amplitude of 1.5 mm with 10 to 55 Hz band of vibration frequency to each of the 3 perpendicular directions for 2 hours.	The value of oscillation frequency/current consumption should be ±10% of the initial measurements. The SPL should be within ±10dB compared with the initial measurement.
drop test	The part will be dropped from a height of 75 cm onto a 40 mm thick wooden board 3 times in 3 axes (X, Y, Z) for a total of 9 drops.	

ENVIRONMENT TEST

item	test condition	evaluation standard
high temp. test	After being placed in a chamber at +95°C for 240 hours.	
low temp. test	After being placed in a chamber at -40°C for 240 hours.	
humidity test	After being placed in a chamber at +40°C and 90±5% relative humidity for 240 hours.	
temp. cycle test	The part shall be subjected to 5 cycles. One cycle will consist of: 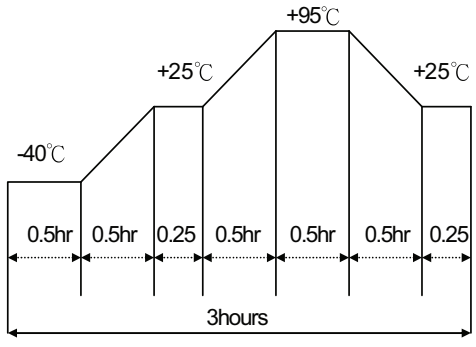 	The buzzer will be measured after being placed at +25°C for 4 hours. The value of the oscillation frequency/current consumption should be ±10% compared to the initial measurements. The SPL should be within ±10dB compared to the initial measurements.

PART NUMBER: CPE-420 **DESCRIPTION:** piezo audio indicators

RELIABILITY TEST

item	test condition	evaluation standard
operating (life test)	1. Continuous life test: The part will be subjected to 48 hours of continuous operation at +70°C with rated voltage applied. 2. Intermittent life test: A duty cycle of 1 minute on, 1 minutes off, a minimum of 5,000 times at room temp (+25 ±2°C) with rated voltage applied.	The buzzer will be measured after being placed at +25°C for 4 hours. The value of the oscillation frequency/current consumption should be ±10% compared to the initial measurements. The SPL should be within ±10dB compared to the initial measurements.

TEST CONDITIONS

standard test condition	a) tempurature: +5 ~ +35°C	b) humidity: 45 - 85%	c) pressure: 860-1060 mbar
judgement test condition	a) tempurature: +25 ±2°C	b) humidity: 60 - 70%	c) pressure: 860-1060 mbar

PART NUMBER: CPE-420 **DESCRIPTION:** piezo audio indicators

PACKAGING

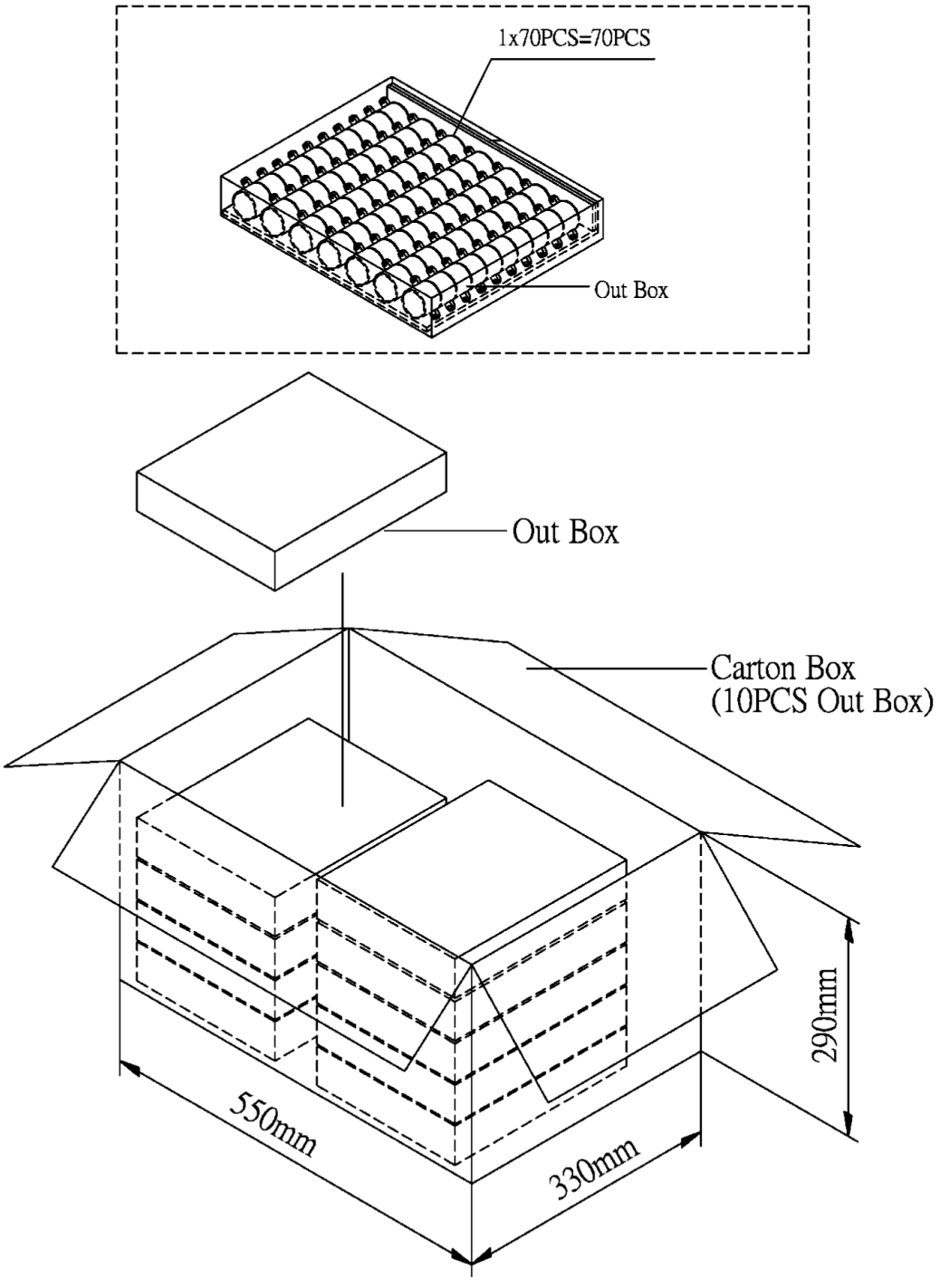

Out Box	310mmx248mmx49mm	1x70PCS=70PCS
Carton Box	550mmx330mmx290mm	70PCSx10=700PCS