Triple Output Switchers

15-60 Watts
CPC Series

THE XPERTS IN POWER

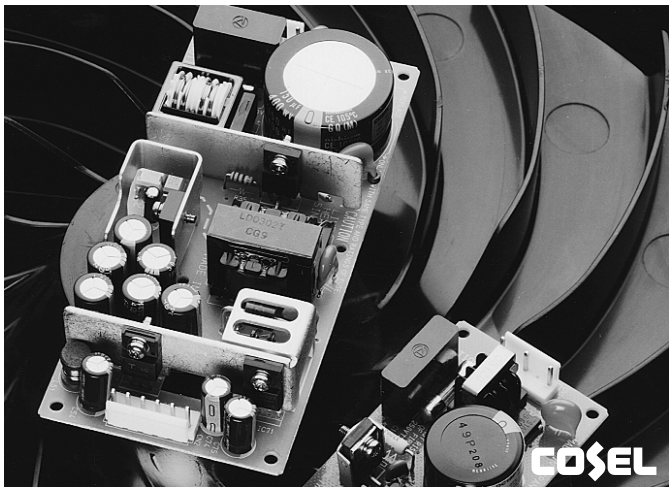

- Low Profile
- Small, Compact PCB Format
- Isolated Auxiliary Outputs
- Low Noise
- 85-264 VAC Universal Input
- Optional Covers & Looms
- International Safety Approvals

Specification

Input

Input Voltage	•	*85-264 VAC (110-370 VDC)*
Input Frequency	•	*47-440 Hz*
Inrush Current	•	*60 A max at 200 V input & full load (cold start)*

Output

Hold-Up Time	•	*10 ms min at 85 V input & full load (100 ms typical at 200 V input)*
Output Voltage	•	*See Table, 5 V adjustable, V1 is isolated from V2 & V3*
Output Voltage Adjustment	•	*5 V ±5%*
Output Voltage Set Point	•	*±6% max*
Line Regulation	•	*0.4% max over specified input range*
Load Regulation	•	*2% 5 V output, 1% auxiliary outputs*
Ripple & Noise	•	*40 mV pk-pk typical (180 mV pk-pk max)*
Minimum Load	•	*No minimum load - See Note 3*
Short Circuit & Overload Protection	•	*Operates >105% of rating auto recovery*
Overvoltage Protection	•	*Operates >115% of rating +5 V output*

General

Switching Frequency	•	*Variable frequency 40-400 kHz dependant on line & load*
Efficiency	•	*70-72% typical*
Isolation	•	*Input to output 3000 VAC for 1 min, 500 VDC, 50 Mohm Input to earth 2000 VAC for 1 min, 500 VDC, 50 Mohm Output to earth 500 VAC for 1 min, 500 VDC, 50 Mohm*
Leakage Current	•	*0.75 mA max.*
Mating Connectors	•	*Available as an option*
Cable Looms	•	*Available as an option*
Covers	•	*Available as an option*

Environmental

Operating Temperature	•	*-10°C to +70°C, derate above +50 °C Consult Sales Office*
Storage Temperature	•	*-20 °C to +75 °C*
Relative Humidity	•	*20-90% non-condensing*
Vibration	•	*10-55 Hz at 2 G, 3 mins period for 60 mins along X, Y & Z axis*
Shock	•	*20 G for 11 ms, once on X, Y & Z axis*

EMC & Safety

EMC	•	*FCC curve B, EN55022B*
Safety Approvals	•	*Approved to UL1950, IEC950, CSA22.2 No.234, EN60950*

OUTPUT VOLTAGE & CURRENT RATINGS — CPC

Output Power	Output 1[1]	Output Ratings Output 2[2]	Output 3[2]	Model Number
15 W	+5 V @ 2.0 A (3.0 A pk)	+12 V @ 0.3 A (0.6 A pk)	-12 V @ 0.2 A (0.30 A pk)	**CPC15UT1**
15 W	+5 V @ 2.0 A (3.0 A pk)	+15 V @ 0.3 A (0.6 A pk)	-15 V @ 0.2 A (0.30 A pk)	**CPC15UT2**
30 W	+5 V @ 3.0 A (4.5 A pk)	+12 V @ 1.2 A (2.0 A pk)	-12 V @ 0.3 A (0.45 A pk)	**CPC30UT1**
30 W	+5 V @ 3.0 A (4.5 A pk)	+15 V @ 1.0 A (2.0 A pk)	-15 V @ 0.3 A (0.45 A pk)	**CPC30UT2**
60 W	+5 V @ 5.0 A (7.0 A pk)	+12 V @ 2.5 A (3.5 A pk)	-12 V @ 0.5 A (0.70 A pk)	CPC60UT1
60 W	+5 V @ 5.0 A (7.0 A pk)	+15 V @ 2.0 A (3.5 A pk)	-15 V @ 0.5 A (0.70 A pk)	CPC60UT2

Notes

1. *Isolated from 2 & 3.*
2. *Linear regulated..*
3. *The specified output currents are available for a maximum duration of 10 s if the average current level is below rating and the total power is below rating for the unit. Outputs 2 & 3 may be loaded to 80% of their rated current when +5 V is not loaded. 'FG' terminal should be used as AC input earth. It is isolated from the DC output.*
4. *Mating input & output connectors are available. Example: order as CPC30 CON KIT for 30 watt models.*
5. *Loom kit option: comprising of 2 x 300 mm length cable looms, one terminated with a mating connector for input and the other for output terminals.*
6. *Cover option: wrap around chassis & safety cover supplied as a kit or fitted.*

Operating Characteristics

STATIC CHARACTERISTICS

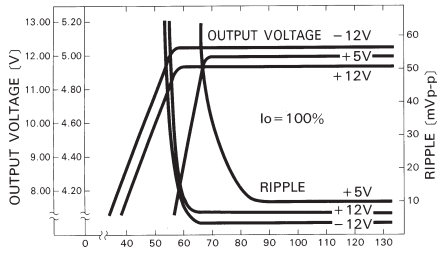

OVERCURRENT CHARACTERISTICS

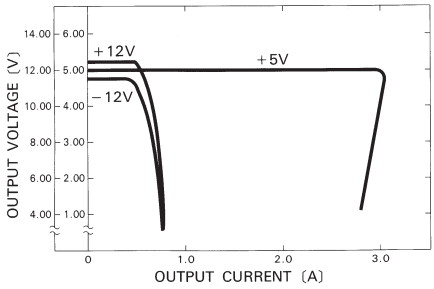

Mechanical Details - 15 Watt Models

PCB Version

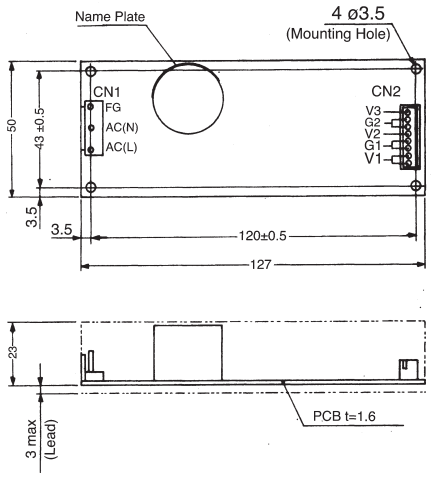

Fuse Rating 250 V T2 A

Covered Version

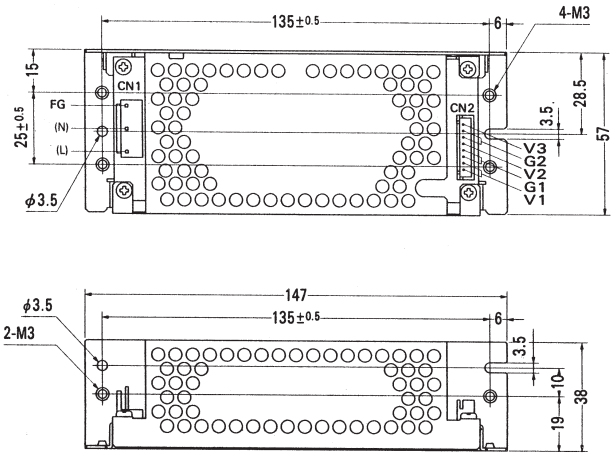

Supplied as cover kit (not fitted). Order as **CPC15/COVER KIT**
Supplied fitted use suffix C e.g. CPC15UT1-C

I/O Connector		Mating Connector (Terminal)
CN1	B3P5-VH	VHR-5N (SVH-21T-1.1 or SVH-21-P1.1)
CN2	B8B-XH-A	XHP-8 (BXH-001T-P0.6 or SXH-001T-P0.6)

Mfr: JST

PIN ASSIGNMENT

CN1

Pin No.	Input
1	AC(L)
2	
3	AC(N)
4	
5	FG

CN2

Pin No.	Input
1	V 1
2	V 1
3	G 1
4	G 1
5	V 2
6	G 2
7	G 2
8	V 3

NOTES:
2 A per pin maximum for CN2
Weight: 150g or less
Tolerance: ±1
Dimensions in mm
PWB Material: Glass composite (CEM3)

Mechanical Details - 30 Watt Models

PCB Version

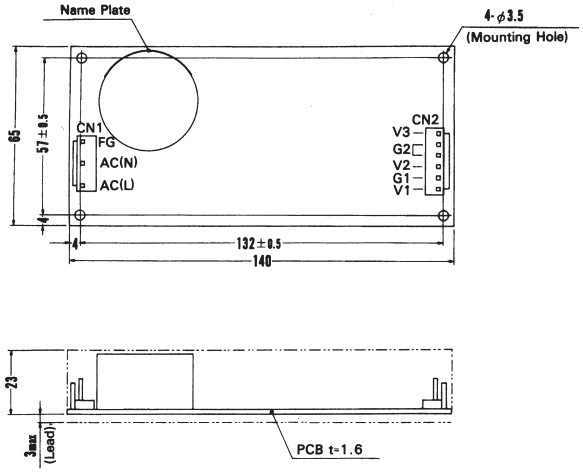

Fuse Rating 250 V T3 A

Covered Version

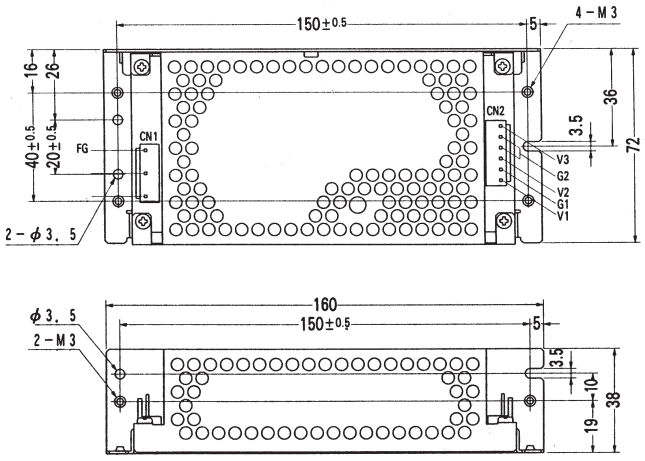

Supplied as cover kit (not fitted). Order as **CPC30/COVER KIT**
Supplied fitted use suffix C e.g. CPC30UT1-C

PIN ASSIGNMENT

I/O Connector		Mating Connector (Terminal)
CN1	B3P5-VH	VHR-5N (SVH-21T-1.1 or SVH-21-P1.1)
CN2	B6P-VH	VHR-6N (SVH-21T-1.1 or SVH-21T-P1.1))

Mfr: JST

CN1

Pin No.	Input
1	AC(L)
2	
3	AC(N)
4	
5	FG

CN2

Pin No.	Input
1	V 3
2	G 2
3	G 2
4	V 2
5	G 1
6	V 1

NOTES:
2 A per pin maximum for CN2
Weight: 220g or less
Tolerance: ±1
Dimensions in mm
PWB Material: Glass composite (CEM3)

Mechanical Details - 60 Watt Models

PCB Version

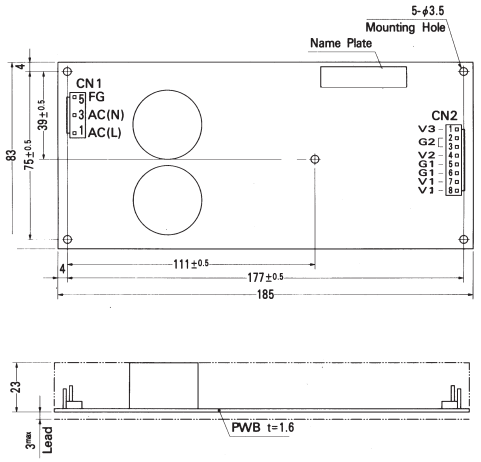

Fuse Rating 250 V T3 A

Covered Version

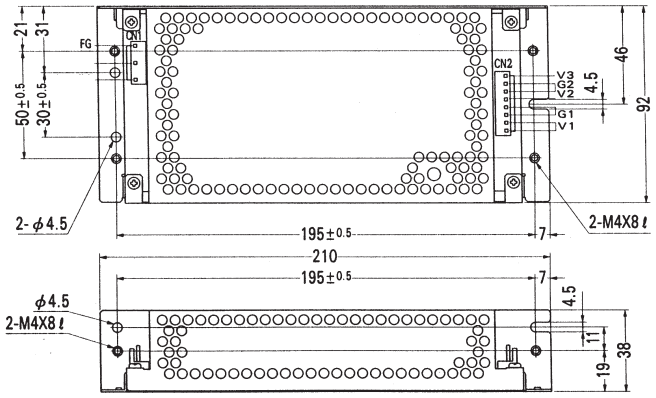

Supplied as cover kit (not fitted). Order as **CPC60/COVER KIT**
Supplied fitted use suffix C e.g. CPC60UT1-C

PIN ASSIGNMENT

I/O Connector		Mating Connector (Terminal)
CN1	B3P5-VH	VHR-5N (SVH-21T-1.1 or SVH-21-T-P1.1)
CN2	B8P-VH	VHR-8N(SVH-21T-1.1 or SVH-21T-P1.1)

Mfr: JST

CN1

Pin No.	Input
1	AC(L)
2	
3	AC(N)
4	
5	FG

CN2

Pin No.	Input
1	V 3
2	G 2
3	G 2
4	V 2
5	G 1
6	G 1
7	V 1
8	V 1

NOTES:
5 A per pin maximum for CN2
Weight: 300g or less
Tolerance: ±1
Dimensions in mm
PWB Material: Glass composite (CEM3)

LOOM KITS — CPC

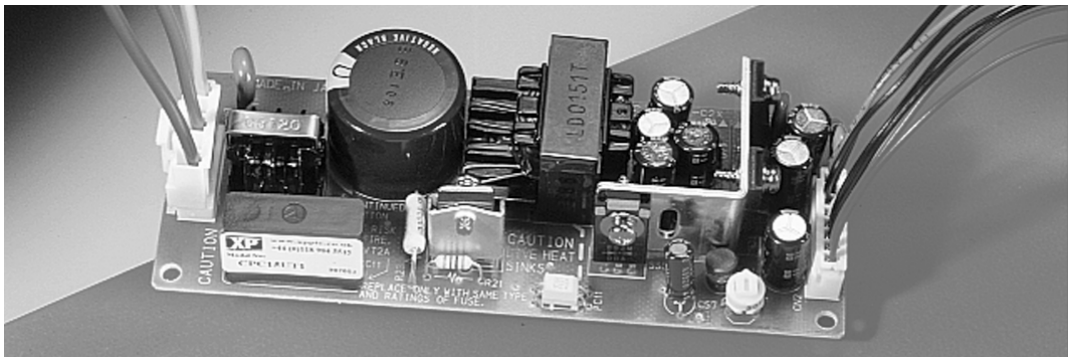

Loom Kit - 15 Watt Models

Input Connector

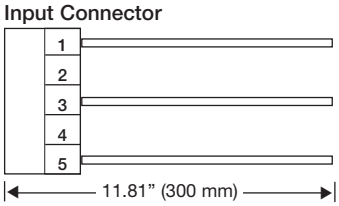

Pin No.	Wire Gauge	Colour	Input
1	0.5 mm	Brown	L
2	-	-	-
3	0.5 mm	Blue	N
4	-	-	-
5	0.5 mm	Grn/Yel	E

Order as CPC 15 Loom KT

Output Connector

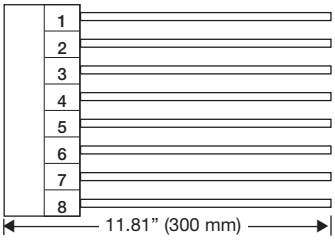

Pin No.	Wire Gauge	Colour	Output
1 & 2	22 AWG	Red	V 1
3 & 4	22 AWG	Black	G 1
5	22 AWG	Yellow	V 2
6 & 7	22 AWG	Black	G 2
8	22 AWG	Grey	V 3

Loom Kit - 30 Watt Models

Input Connector

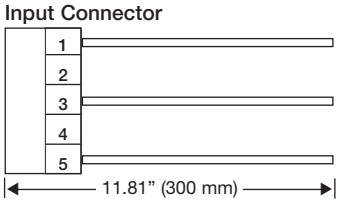

Pin No.	Wire Gauge	Colour	Input
1	0.5 mm	Brown	L
2	-	-	-
3	0.5 mm	Blue	N
4	-	-	-
5	0.5 mm	Grn/Yel	E

Order as CPC 30 Loom KT

Output Connector

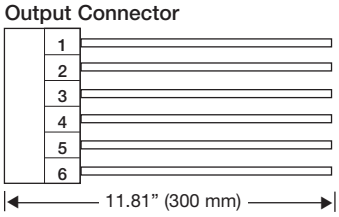

Pin No.	Wire Gauge	Colour	Output
1	0.5 mm	Grey	V 3
2 & 3	0.5 mm	Black	G 2
4	0.5 mm	Yellow	V 2
5	0.5 mm	Black	G 1
6	0.5 mm	Red	V 1

Loom Kit - 60 Watt Models

Input Connector

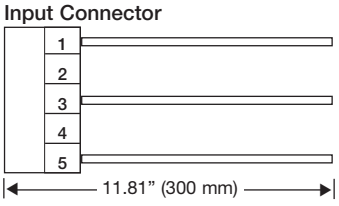

Pin No.	Wire Gauge	Colour	Input
1	0.5 mm	Brown	L
2	-	-	-
3	0.5 mm	Blue	N
4	-	-	-
5	0.5 mm	Grn/Yel	E

Order as CPC 60 Loom KT

Output Connector

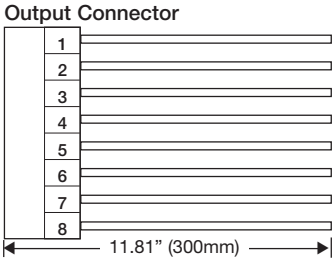

Pin No.	Wire Gauge	Colour	Output
1 & 2	0.5 mm	Grey	V 3
2 & 3	0.5 mm	Black	G 2
4	0.5 mm	Yellow	V 2
5 & 6	0.5 mm	Black	G 1
7 & 8	0.5 mm	Red	V 1