Piezo Buzzer (DC)

CANOPUS

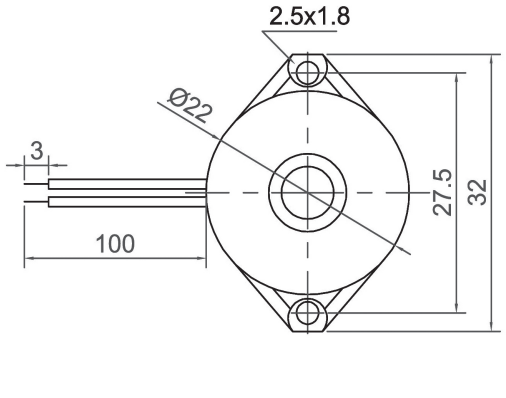

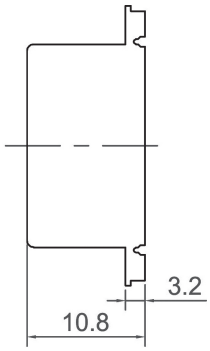



Canopus Part no.	Operating Voltage (VDC)	Rated Voltage (VDC)	Max Rated Current (mA)	Min Sound Output (dBA)	Resonant Frequency (Hz)	Tone Nature	Operating Tempature (℃)	Housing	Weight (g)
CPB2211HC45BW	3 ~ 30	12	3	85 at 30cm	4500 ± 500	Continuous	-20 ~ +60	ABS	5



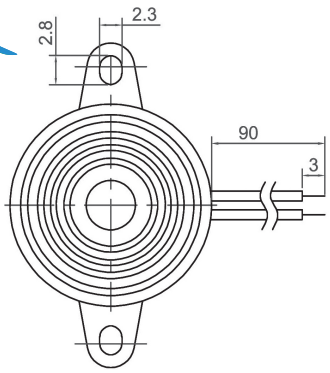

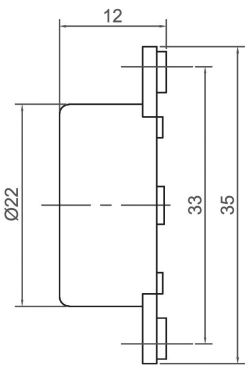

Canopus Part no.	Operating Voltage (VDC)	Rated Voltage (VDC)	Max Rated Current (mA)	Min Sound Output (dBA)	Resonant Frequency (Hz)	Tone Nature	Operating Tempature (℃)	Housing	Weight (g)
CPB2212GC35BW	1.5 ~ 24	9	20	85 at 30cm	3500 ± 500	Continuous	-20 ~ +70	ABS	14
CPB2212HC52BW	1.5 ~ 15	12	20	90 at 30cm	5200 ± 500	Continuous	-20 ~ +60	ABS	14

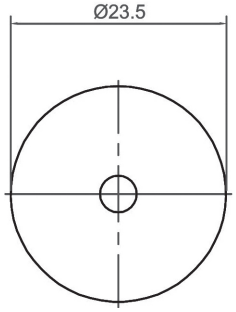

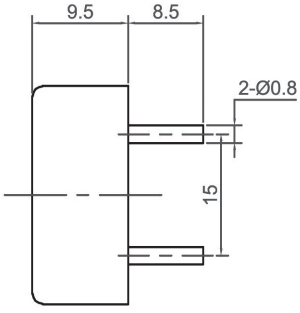

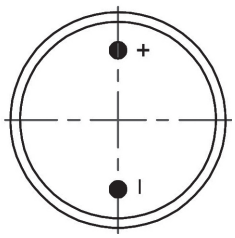



Canopus Part no.	Operating Voltage (VDC)	Rated Voltage (VDC)	Max Rated Current (mA)	Min Sound Output (dBA)	Resonant Frequency (Hz)	Tone Nature	Operating Tempature (℃)	Housing	Weight (g)
CPB2309HC34NP	3 ~ 20	12	15	90 at 10cm	3400 ± 500	Continuous	-20 ~ +60	Noryl	4
CPB2309HC34NP-W	3 ~ 20	12	8	90 at 10cm	3400 ± 500	Continuous	-20 ~ +60	Noryl	4

Your Efficient Supplier

www.canopus.com.hk

TEL.: (852) 2806 2812 Fax: (852) 2652 2216