CP600 THRU CP608

SINGLE-PHASE SILICON BRIDGE-P.C. MTG 3A, HEAR-SINK MTG 6A
VOLTAGE - 50 to 800 Volts CURRENT - P.C. MTG 3A, HEAT-SINK MTG 6A

CP-6

FEATURES

- Surge overload rating—125 Amperes peak
- Low forward voltage drop and reverse leakage
- Small size, simple installation
- Plastic package has Underwriter Laboratory Flammability Classification 94V-O
- Reliable low cost construction utilizing molded plastic technique

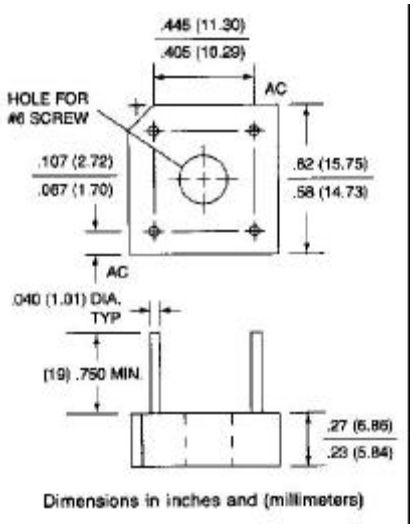

MECHANICAL DATA

Mounting position: Any

Weight: 0.2 ounce, 5.6 grams

Terminals: Leads solderable per MIL-STD-202, Method 208

Mounting torque: 5 in. lb. Max.

MACXIMUM RATINGS AND ELECTRICAL CHARACTERISTICS

Ratings at 25 ambient temperature unless otherwise specified.

Single phase, half wave, 60Hz, resistive or inductive load.

For capacitive load derate current by 20%.

	CP600	CP601	CP602	CP604	CP606	CP608	UNITS
Max Recurrent Peak Reverse Voltage	50	100	200	400	600	800	V
Max Bridge Input RMS	35	70	140	280	420	560	V
Max DC Blocking Voltage	50	100	200	400	600	800	V
Max Average Rectified Output at T_C=50 * See Fig. 2 at T_A=25 **	6.0 3.0						A A
Peak Forward Surge Current, 8.3ms single half sine-wave superimposed on rated load	125						A
Max Forward Voltage Drop per element at 3.0A DC & 25 . See Fig. 3	1.1						V
Max Rev Leakage at rated Dc Blocking Voltage per element at 25 See Fig 4 at100	10.0 1.0						A mA
I^2t Rating for fusing (t<8.3ms)	127						A^2Sec
Typical junction capacitance per leg (Note 4) CJ	186						$_P$F
Typical Thermal Resistance per leg (Note 3) R JA Typical Thermal Resistance per leg (Note 2) R JL	22.0 7.3						/W
Operating Temperature Range T_J	-55 TO +125						
Storage Temperature Range T_A	-55 TO +150						

NOTES:

1. Bolt down on heat-sink with silicon thermal compound between bridge and mounting surface for maximum heat transfer with #6 screw.
2. Units Mounted on a 5.5×6.0 ×0.11” thick (14×15×0.3cm) AL plate.
3. Units Mounted on P.C.B at 0.375”(9.5mm) lead length with 0.5×0.5”(12×12mm)copper pads.
4. Measured at 1.0MHZ and applied reverse voltage of 4.0 Volts.

RATING AND CHARACTERISTIC CURVES

CP600 THRU CP608

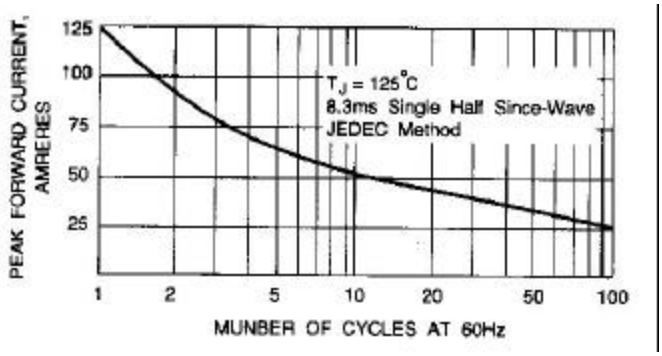

Fig. 1-NON-RECURRENT SURGE RATING

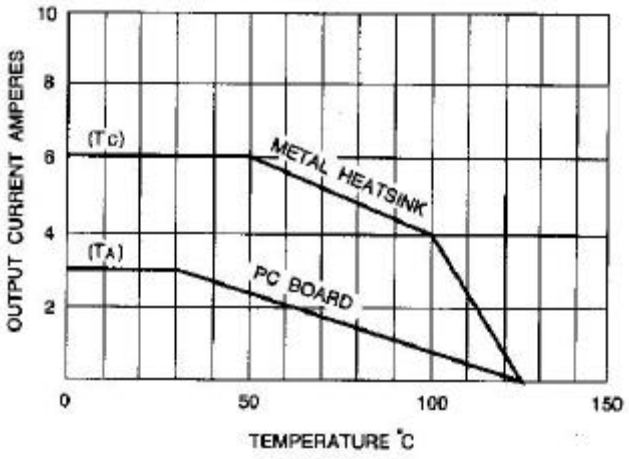

Fig. 2-DERATING CURVE FOR OUTPUT RECTIFIED CURRENT

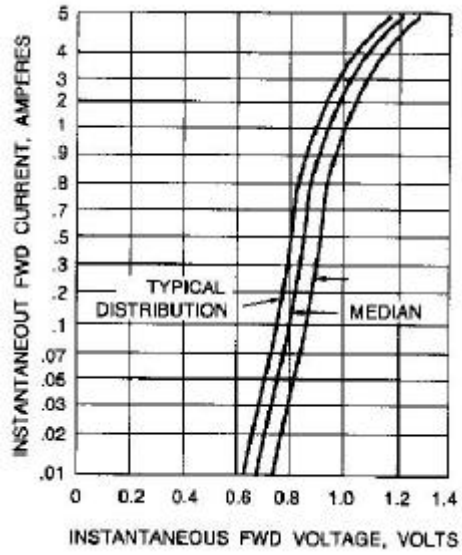

Fig. 3-TYPICAL FORWARD CHARACTERISTICS

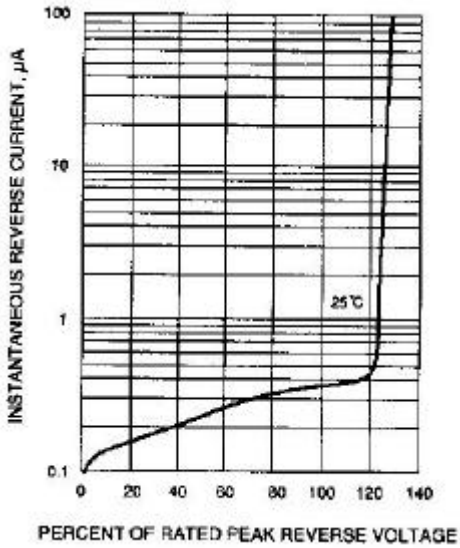

Fig. 4- TYPICAL REVERSE CHARACTERISTICS