CP2120 Evaluation Kit User's Guide

1. Kit Contents

The CP2120 Evaluation Kit contains a CP2120 evaluation board and a power supply. The following supporting documents can be downloaded from www.silabs.com:

- CP2120 Data Sheet
- AN311: CP2120 Porting Guide

2. CP2120 Hardware Interface

The evaluation board is connected to a SPI master and to SMBus devices as shown in Figure 1.

1. Connect the SPI Master's SPI bus lines to the CP2120. If The CP2120 is the only SPI slave device on the SPI bus, then the CS pin can be tied low.
2. Connect the CP2120's INT pin to a port pin of the SPI Master.
3. Connect the CP2120 to SMBus devices through the SMBus lines.

Please refer to "4. Evaluation Board" on page 2 for more information about these steps.

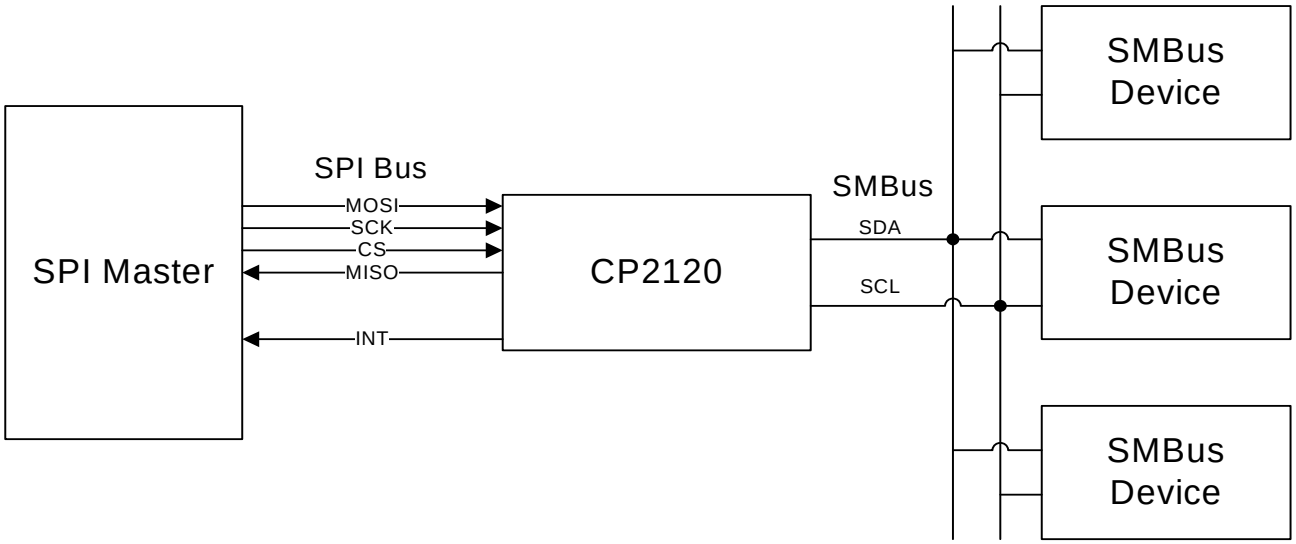

Figure 1. System Connections

3. CP2120 Operation

Once connected as shown in Figure 1, the SPI Master issues commands to the CP2120 across the SPI bus. The CP2120 responds to commands by initiating an SMBus transfer with SMBus slave devices, reading from or writing to internal registers, or interfacing with general purpose input/output (I/O) port pins. When an SMBus transaction completes, the CP2120 pulls the INT pin low, which signals the SPI Master that the command has been processed.

Copyright © 2006 by Silicon Laboratories

4. Evaluation Board

The CP2120 evaluation board comes with a CP2120 device pre-installed for system evaluation and development. Numerous I/O connections are provided to facilitate prototyping using the evaluation board. Refer to Figure 2 for the locations of the various I/O connectors.

J1	Power Connector
J2	SPI Master Interface
J3	SMBus Interface
J4	MISO-MOSI Connector
J6	SMBus SDA Pullup Connector
J7	SMBus SCL Pullup Connector
J9	LED Connector
J10	General Purpose I/O Interface

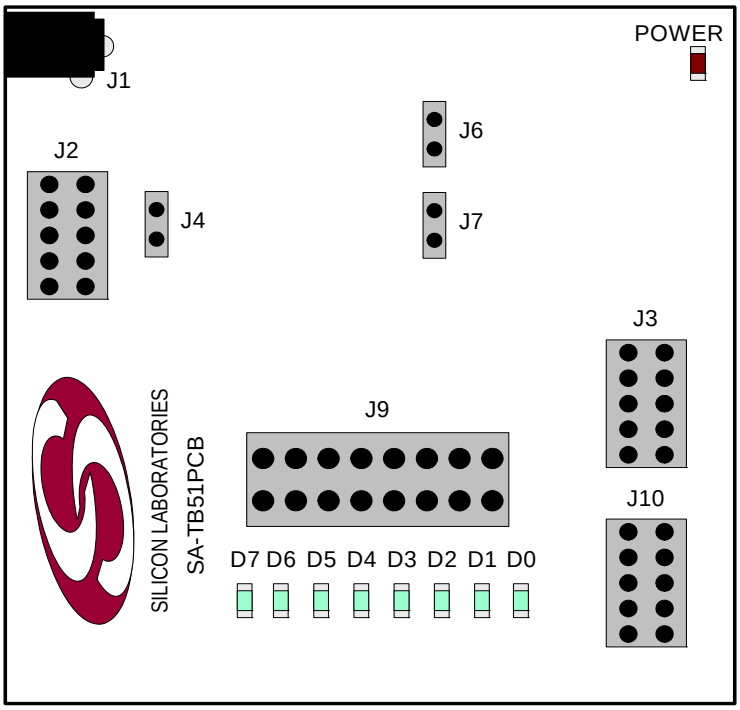

Figure 2. CP2120 Evaluation Board

4.1. J2—SPI Master Interface

Connector J2 provides the SPI Master access to the CP2120 SPI, control, and reset lines. Table 1 shows the pinout of the J2 header.

Table 1. Pinout for J2

Pin 1	SPI Bus—SCLK
Pin 2	SPI Bus—MISO
Pin 3	SPI Bus—MOSI
Pin 4	SPI Bus—CS
Pin 5	INT
Pin 6	Not Used
Pin 7	RST
Pin 8	GND
Pin 9	Not Used
Pin 10	Not Used

4.2. J3—SMBus Interface

Connector J3 provides the CP2120 access to the SMBus. Table 2 shows the pinout of the J3 header.

Note: All pins labeled SCL are tied together, and all pins labeled SDA are tied together. Multiple connections to SCL and SDA signals are provided to allow multiple devices to connect to the evaluation board.

Table 2. Pinout for J3

Pin 1	SMBus—SCL
Pin 2	SMBus—SDA
Pin 3	SMBus—SCL
Pin 4	SMBus—SDA
Pin 5	SMBus—SCL
Pin 6	SMBus—SDA
Pin 7	SMBus—SCL
Pin 8	SMBus—SDA
Pin 9	GND
Pin 10	GND

4.3. J4—SPI MISO/MOSI Connector

Some SPI master systems tie together the MISO and MOSI SPI data lines. The CP2120 evaluation board allows developers to connect these two signals through a resistor by placing a header on J4.

Note: When operating the SPI bus with a header on J4, only drive the MOSI pin whenever data is being transmitted to the CP2120. When the SPI bus is idle, or when the CP2120 is transmitting data, the SPI master must set its MOSI pin into an open-drain state to avoid port pin contention.

4.4. J6 and J7—SMBus Pullup Connectors

Connectors J6 and J7 give developers the option of adding pullup resistors to the SMBus's SDA and SCL lines. Removing shorting blocks from these headers disconnects the pullups from the SMBus lines.

Note: The SMBus lines need pullups to V_{DD} in order to function properly. If the headers are removed from J6 and J7, remember to add pullups to V_{DD} elsewhere on the SMBus.

4.5. J9—LED Connector

Connector J9 allows the CP2120's General Purpose I/O pins to be connected to the array of LEDs on the evaluation board. Once a header has been placed connecting a pin on the side closest to the CP2120 to its corresponding pin on the side of the jumper closest to the LEDs. To use one of the LEDs, place a shorting block on the J9 pin closest to the LED, connecting the corresponding J9 pin on the side of the connector closer to the CP2120. See Figure 3 for an example of this connection. Writing a 0 to the connected general purpose I/O pin will turn on the LED, and writing a 1 to that pin will turn off the LED.

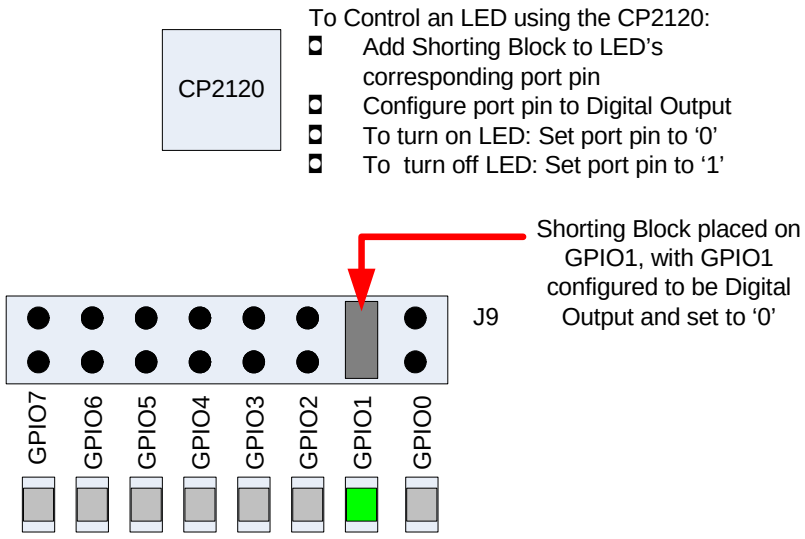

Figure 3. Controlling the LEDs

4.6. J10—General Purpose I/O Interface

Connector J10 enables off-board access to the CP2120's eight general purpose I/O pins, as well as the Edge-Triggered Interrupt Source pin. Table 3 shows the pinout for this header.

Table 3. Pinout for J10

Pin 1	GPIO Pin 0
Pin 2	GPIO Pin 1
Pin 3	GPIO Pin 2
Pin 4	GPIO Pin 3
Pin 5	GPIO Pin 4
Pin 6	GPIO Pin 5
Pin 7	GPIO Pin 6
Pin 8	GPIO Pin 7
Pin 9	Edge Triggered Interrupt Source
Pin 10	GND

5. Schematic

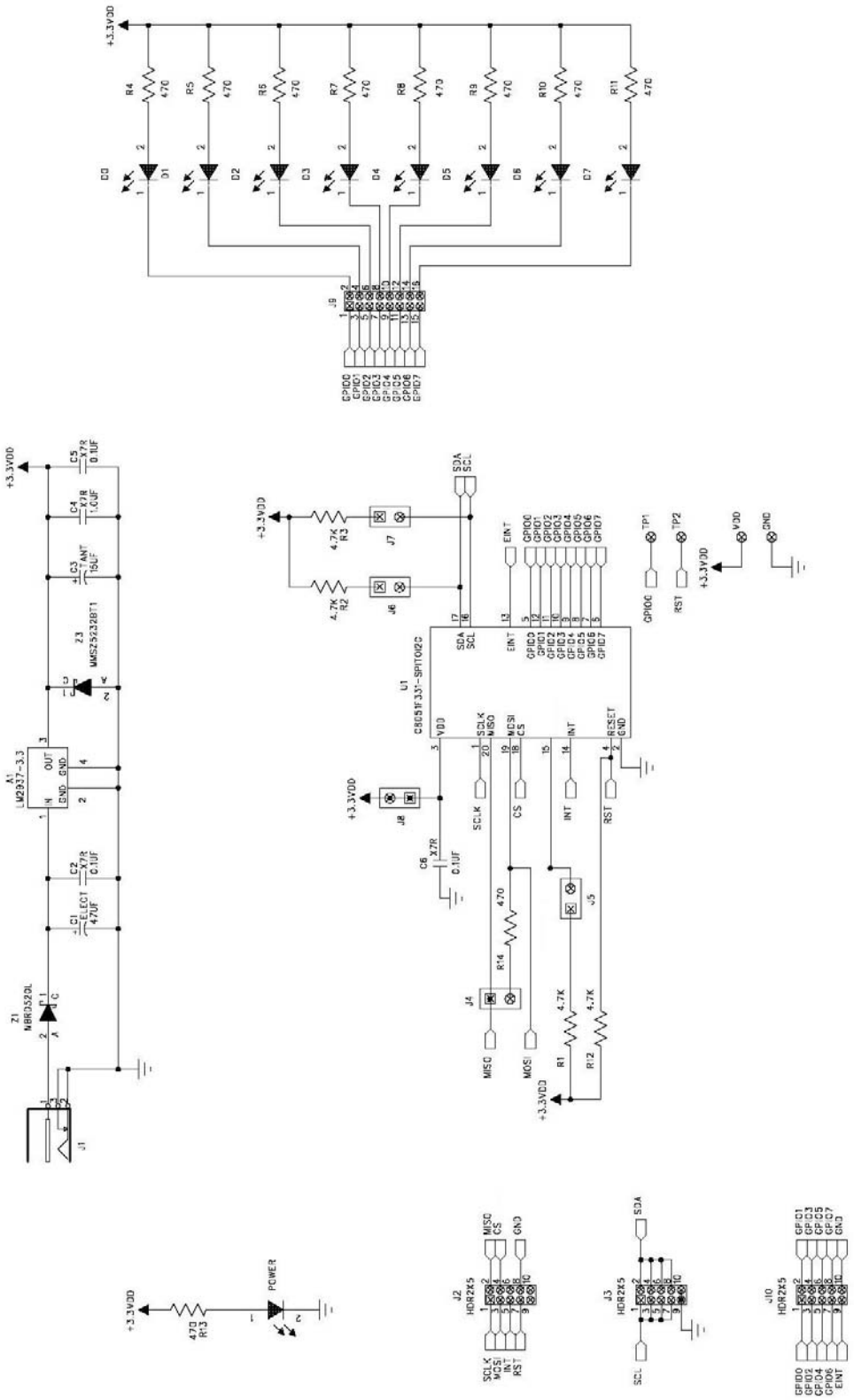

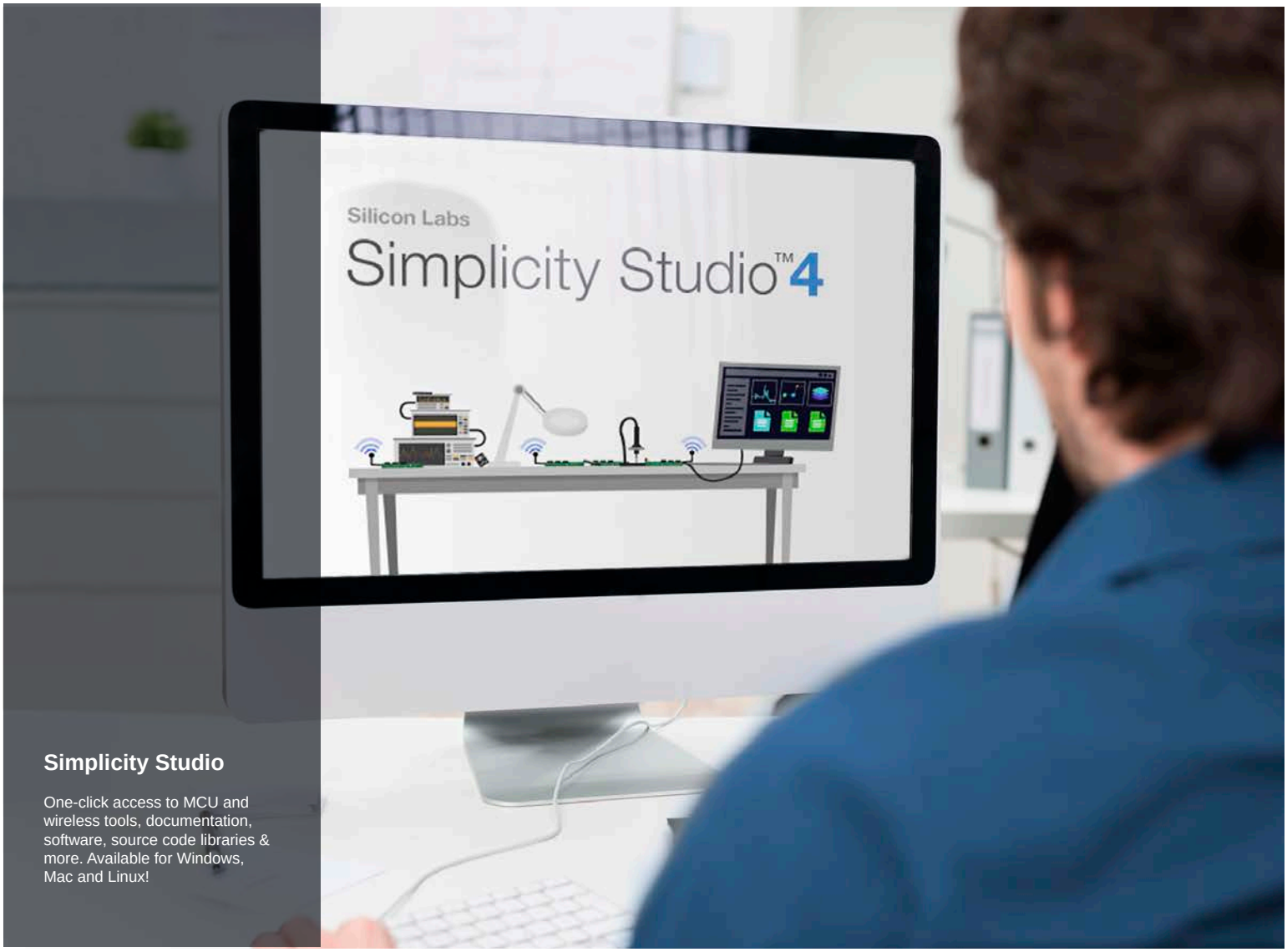

Simplicity Studio

One-click access to MCU and wireless tools, documentation, software, source code libraries & more. Available for Windows, Mac and Linux!

IoT Portfolio
www.silabs.com/IoT

SW/HW
www.silabs.com/simplicity

Quality
www.silabs.com/quality

Support and Community
community.silabs.com

Disclaimer
Silicon Labs intends to provide customers with the latest, accurate, and in-depth documentation of all peripherals and modules available for system and software implementers using or intending to use the Silicon Labs products. Characterization data, available modules and peripherals, memory sizes and memory addresses refer to each specific device, and "Typical" parameters provided can and do vary in different applications. Application examples described herein are for illustrative purposes only. Silicon Labs reserves the right to make changes without further notice and limitation to product information, specifications, and descriptions herein, and does not give warranties as to the accuracy or completeness of the included information. Silicon Labs shall have no liability for the consequences of use of the information supplied herein. This document does not imply or express copyright licenses granted hereunder to design or fabricate any integrated circuits. The products are not designed or authorized to be used within any Life Support System without the specific written consent of Silicon Labs. A "Life Support System" is any product or system intended to support or sustain life and/or health, which, if it fails, can be reasonably expected to result in significant personal injury or death. Silicon Labs products are not designed or authorized for military applications. Silicon Labs products shall under no circumstances be used in weapons of mass destruction including (but not limited to) nuclear, biological or chemical weapons, or missiles capable of delivering such weapons.

Trademark Information
Silicon Laboratories Inc.® , Silicon Laboratories®, Silicon Labs®, SiLabs® and the Silicon Labs logo®, Bluegiga®, Bluegiga Logo®, Clockbuilder®, CMEMS®, DSPLL®, EFM®, EFM32®, EFR, Ember®, Energy Micro, Energy Micro logo and combinations thereof, "the world's most energy friendly microcontrollers", Ember®, EZLink®, EZRadio®, EZRadioPRO®, Gecko®, ISOmodem®, Precision32®, ProSLIC®, Simplicity Studio®, SiPHY®, Telegesis, the Telegesis Logo®, USBXpress® and others are trademarks or registered trademarks of Silicon Labs. ARM, CORTEX, Cortex-M3 and THUMB are trademarks or registered trademarks of ARM Holdings. Keil is a registered trademark of ARM Limited. All other products or brand names mentioned herein are trademarks of their respective holders.

SILICON LABS

Silicon Laboratories Inc.
400 West Cesar Chavez
Austin, TX 78701
USA

http://www.silabs.com