Description	Material	Finish
Body	Brass	Nickel
Socket	BE CU	Gold
Insulation	Teflon	Teflon
Washer	Brass	Nickel
Nut	Brass	Nickel

SIDE VIEW

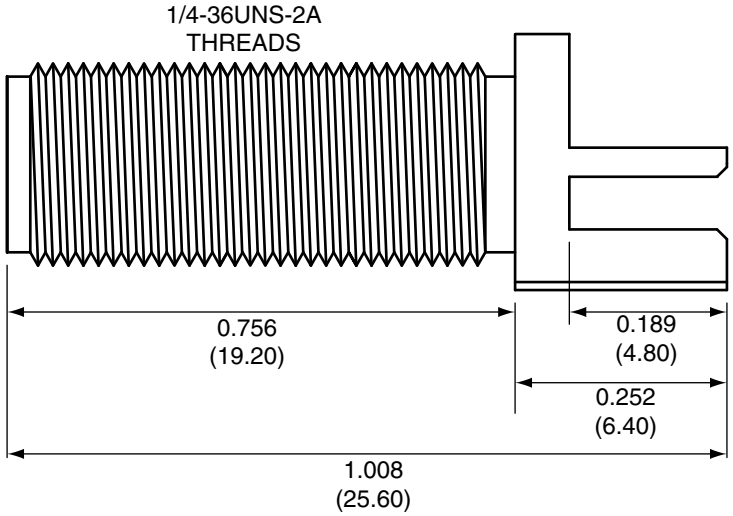

BACK VIEW

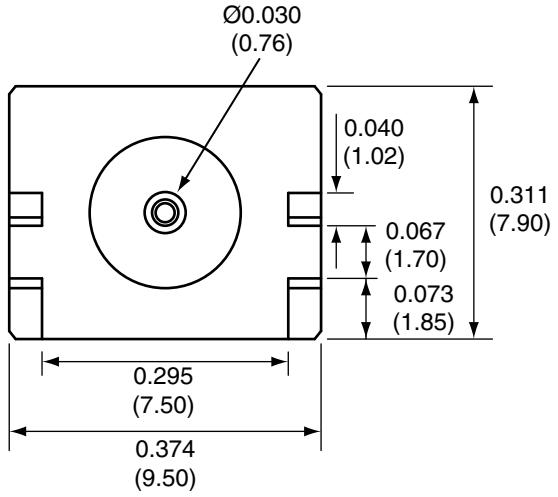

WASHER

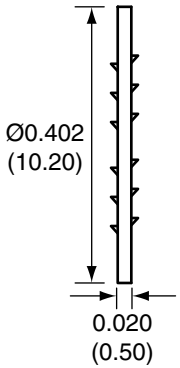

NUT

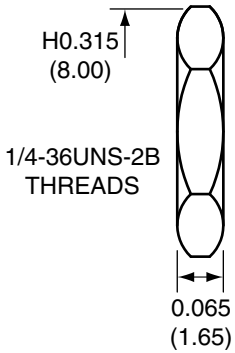

RECOMMENDED
MOUNTING HOLE

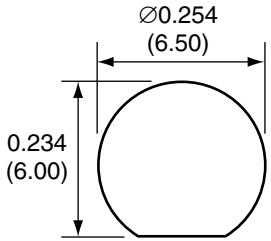

RECOMMENDED FOOTPRINT

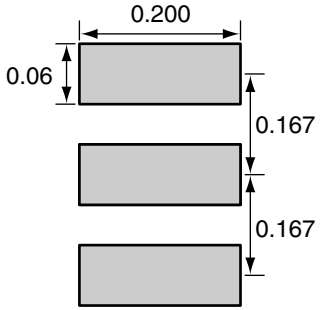

Title: SMA FEMALE EDGE MOUNT FOR 0.062" THICK BOARD, EXTENDED			CONNECTOR CITY 159 ORT LANE MERLIN, OR 97532 PH (541)-471-6256 FAX (541)-471-6251
Part No. CONSMA003.062-L	Revision: 1.0		
Dimensions: INCHES (mm)	Date: 5/21/2007	Sheet 1 of 1	

CONNECTOR CITY
THE VALUE OF CONNECTIONS