COM330-B

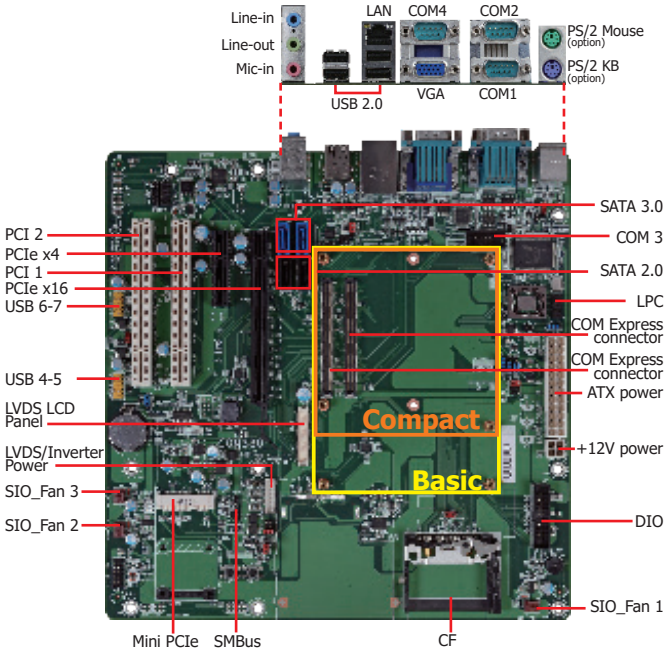

Features

EXPANSION	1 PCIe x16, 1 PCIe x4, 2 PCI
	1 Mini PCIe (PCIe signal only)
DISPLAY OUTPUTS	1 VGA, 1 LVDS
LAN	1 LAN
COM	4 COM
USB	8 USB 2.0
STORAGE	4 SATA: 2 SATA 3.0, 2 SATA 2.0
	1 CF
DIO	8-bit DIO
DIMENSIONS	244mm x 244mm (9.6" x 9.6")

Supports Compact and Basic modules

Mechanical Drawing

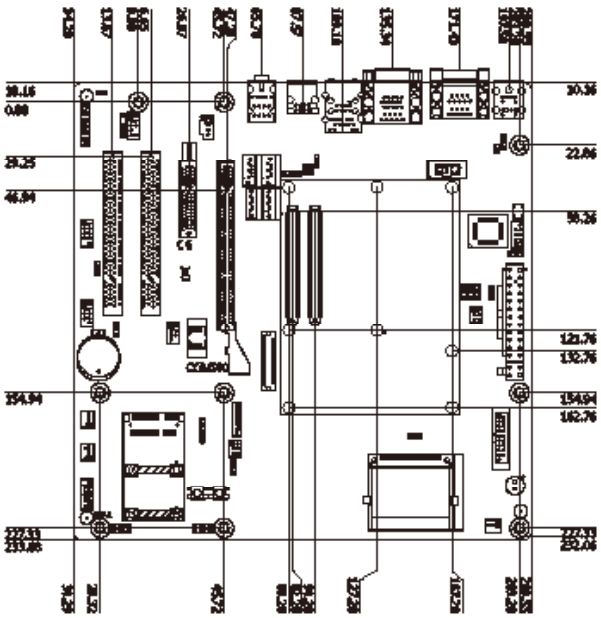

Block Diagram

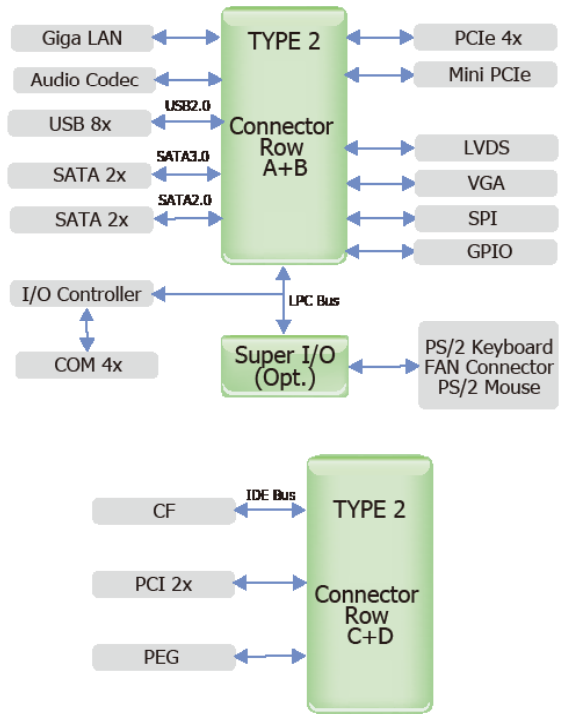

COM330-B

Specifications

** Optional and is not supported in standard model. Please contact your sales representative for more information.*

ONBOARD AUDIO FEATURES
- Realtek ALC886 5.1-channel High Definition Audio
- Audio outputs: Mic-in/Center+Subwoofer, line-in/surround and line out
- S/PDIF audio interface

STORAGE
- 4 Serial ATA ports
  - 2 SATA 3.0 ports with data transfer rate up to 6Gb/s
  - 2 SATA 2.0 ports with data transfer rate up to 3Gb/s
- 1 CompactFlash socket

DIGITAL I/O
- 8-bit Digital I/O connector
  - 4-bit GPI (General Purpose Input)
  - 4-bit GPO (General Purpose Output)

REAR PANEL I/O PORTS
- 3 DB-9 RS232 serial ports
- 1 DB-15 VGA port
- 1 RJ45 LAN port
- 4 USB 2.0/1.1 ports
- Line-in/Surround, Line out, Mic-in/Center+Subwoofer jacks
- 1 mini-DIN-6 PS/2 mouse port*
- 1 mini-DIN-6 PS/2 keyboard port*

I/O CONNECTORS
- 2 connectors for 4 external USB 2.0/1.1 ports
- 1 connector for 1 external RS232 serial port
- 1 LVDS LCD panel connector
- 1 LCD/inverter power connector
- 1 8-bit Digital I/O connector
- 1 front audio connector for line-out and mic-in jacks
- 1 S/PDIF connector
- 4 Serial ATA ports
- 1 LPC connector
- 1 I^2C connector
- 1 SMBus connector
- 1 24-pin ATX power connector
- 1 4-pin 12V power connector
- 1 chassis intrusion connector
- 1 front panel connector
- 3 fan connectors

EXPANSION SLOTS
- 1 PCIe x16 Gen 3 slot
- 1 PCIe x4 Gen 2 slot
- 1 Mini PCIe slot (PCIe 2.0) (PCIe signal only)
  - USB signal: optional
  - Supports half/full size Mini PCIe card
- 2 PCI slots (PCI 2.3)

SUPPORTED COM EXPRESS MODULES
- Basic
- Compact

DAMAGE FREE INTELLIGENCE
- Legacy Super I/O support*
  - Monitors 5V/1.5V/12V/3.3V
  - Monitors SIO_Fan 1/SIO_Fan 2/SIO_Fan 3

ROM INTERFACE
- 1 SPI interface
  - Supports up to 64Mbit
- 1 LPC/FWH interface

TEMPERATURE
- Operating: 0°C to 60°C
- Storage: -20°C to 85°C

HUMIDITY
- 10% to 90%

POWER OUTPUT
- 12V, 5VSB, VCC_RTC (ATX mode)
  12V, 5V, VCC_RTC (AT mode)
  12V, VCC_RTC (AT mode)

PCB
- Dimensions
  - microATX form factor
  - 244mm (9.6") x 244mm (9.6")
- Compliance
  - PICMG COM Express® R2.0, Type 2

CERTIFICATION
- CE
- FCC Class B
- RoHS

Packing List

- 1 COM330-B board
- 2 Serial ATA data cables
- 1 USB port cable (with bracket)
- 1 COM port cable (with bracket)

Optional Items

- Serial ATA data cable
- COM port cable
- USB port cable
- I/O shield
- Serial ATA power cable

DFI reserves the right to change the specifications at any time prior to the product's release. Changes thereafter will be based on the product's revision. Please contact your sales representative for the exact revision offered in your area. All product names mentioned are trademarks of their respective companies. © December 18, 2019 DFI Inc.