COM101-BAT

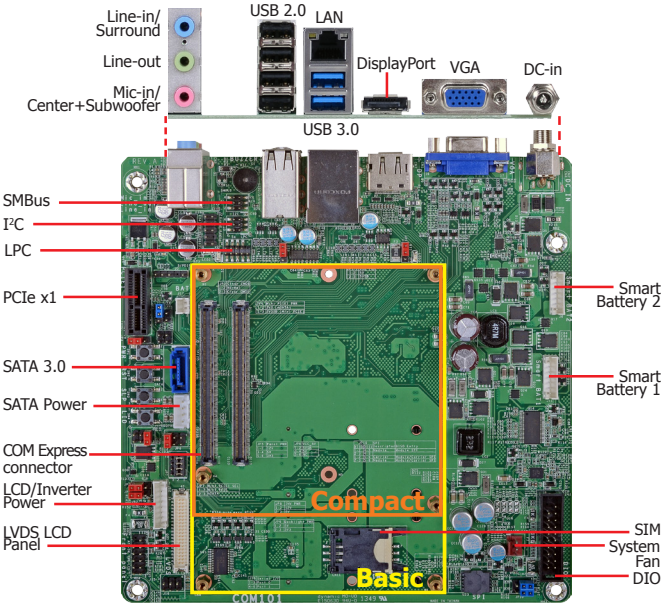

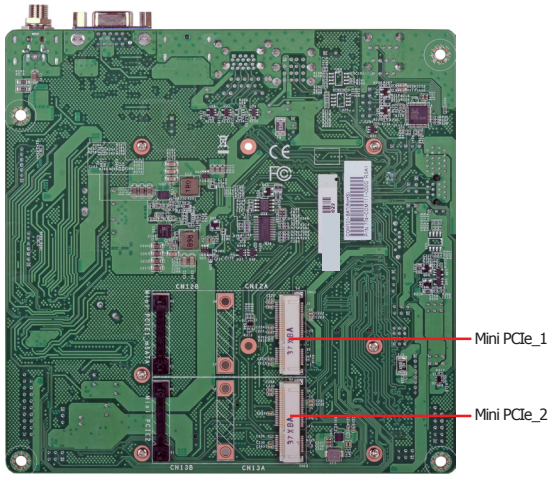

Features

EXPANSION	1 PCIe x1
	2 Mini PCIe
	1 SIM
DISPLAY OUTPUTS	1 DisplayPort
	1 VGA
	1 LVDS
LAN	1 LAN
USB	6 USB: 2 USB 3.0, 4 USB 2.0
STORAGE	1 SATA 3.0
DIO	8-bit DIO
DIMENSIONS	170mm x 170mm (6.7" x 6.7")

Supports Compact and Basic modules

Mechanical Drawing

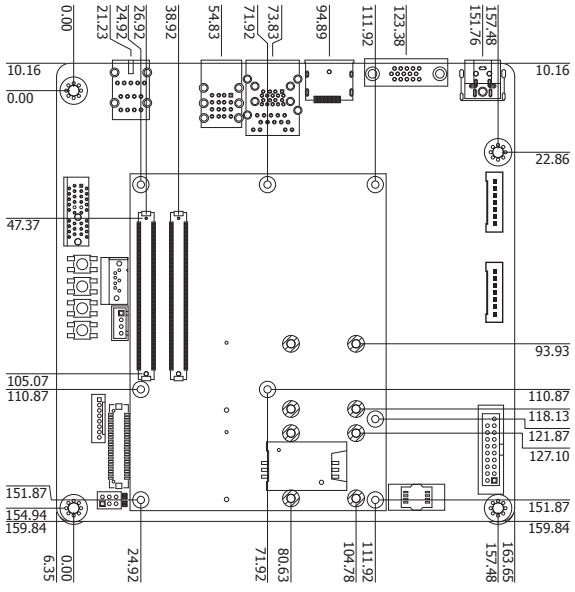

Block Diagram

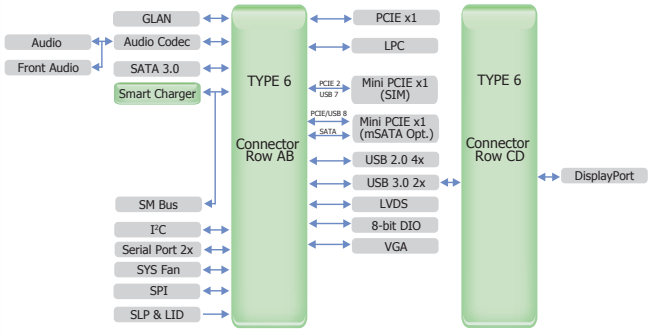

COM101-BAT

Specifications

** Optional and is not supported in standard model. Please contact your sales representative for more information.*

ONBOARD GRAPHICS FEATURES
- Display ports
  - 1 DisplayPort
  - 1 VGA
  - 1 24-bit dual channel LVDS

ONBOARD AUDIO FEATURES
- Realtek ALC886 7.1-channel High Definition Audio
- Audio outputs: Mic-in/Center+Subwoofer, line-in/surround and line out
- S/PDIF audio interface

ONBOARD USB FEATURES
- 2 USB 3.0 ports
- 4 USB 2.0 ports

STORAGE
- 1 SATA 3.0 port with data transfer rate up to 6Gb/s

DIGITAL I/O
- 8-bit Digital I/O connector
  - 4-bit GPI (General Purpose Input)
  - 4-bit GPO (General Purpose Output)

REAR PANEL I/O PORTS
- 19V DC-in jack
- 1 DisplayPort
- 1 RJ45 LAN port
- 2 USB 3.0 ports
- 4 USB 2.0 ports
- 1 VGA port
- Line-in/Surround, Line out, Mic-in/Center+Subwoofer jacks

I/O CONNECTORS
- 2 3-pin connectors for general purpose serial interface (Type 6)
- 1 LVDS LCD panel connector
- 1 LCD/inverter power connector
- 1 8-bit Digital I/O connector
- 1 front audio connector for line-out and mic-in jacks
- 1 S/PDIF connector
- 1 SATA 3.0 port
- 1 SATA power connector
- 2 Smart battery charger connectors
- 1 LPC connector
- 1 I^2C connector
- 1 SMBus connector
- 1 front panel connector
- 1 fan connector

EXPANSION SLOTS
- 1 PCIe x1 slot (PCIe 2.0)
- 2 Mini PCIe slots (PCIe 2.0)
  - 1 slot supports PCIe and USB signals for 3G module
  - 1 slot supports PCIe, USB or mSATA signal
  - Supports half/full size Mini PCIe card
- 1 SIM card socket

ROM INTERFACE
- 1 SPI interface
  - Supports up to 64Mbit

TEMPERATURE
- Operating: 0°C to 60°C
- Storage: -20°C to 85°C

HUMIDITY
- 10% to 90%

POWER OUTPUT
- 12V, 5VSB, VCC_RTC (ATX mode)
  12V, 5V, VCC_RTC (AT mode)
  12V, VCC_RTC (AT mode)

PCB
- Dimensions
  - Mini-ITX form factor
  - 170mm (6.7") x 170mm (6.7")
- Compliance
  - PICMG COM Express® R2.1, Type 6

Packing List

- 1 COM101-BAT board
- 1 SATA data with power cable
- 1 DVD

Optional Items

- SATA data with power cable
- Power adapter (120W, 19V, Level 6) : 671-110003-100G

DFI reserves the right to change the specifications at any time prior to the product's release. Changes thereafter will be based on the product's revision. Please contact your sales representative for the exact revision offered in your area. All product names mentioned are trademarks of their respective companies. © July 7, 2016 DFI Inc.